Basic equipment

From October 1999

For alternatives to relay and fuse positions as well as multi-pin connector wiring - see "Fitting locations" section.

Relay locations on relay plate:

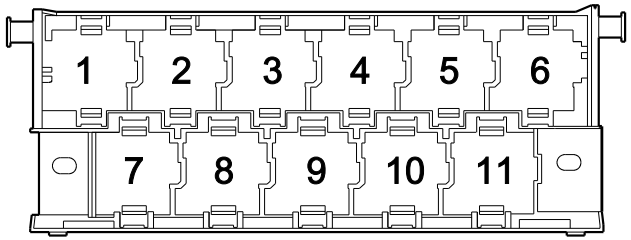

97--25507

6 - X contact relief relay (100)
9 - Windscreen wiper relay (174)
11 - Automatic intermittent wash/wipe relay (19)

Note:

- *The number in brackets behind the part designation denotes the control number on the housing.*

Fuse colours

30 A - green
25 A - white
20 A - yellow
15 A - blue
10 A - red
7.5 A - brown
5 A - beige
3 A - purple

Protected by copyright. Copying for private or commercial purposes, in part or in whole, is not permitted unless authorised by Volkswagen AG. Volkswagen AG does not guarantee or accept any liability with respect to the correctness of information in this document. Copyright by Volkswagen AG.
satelettronica

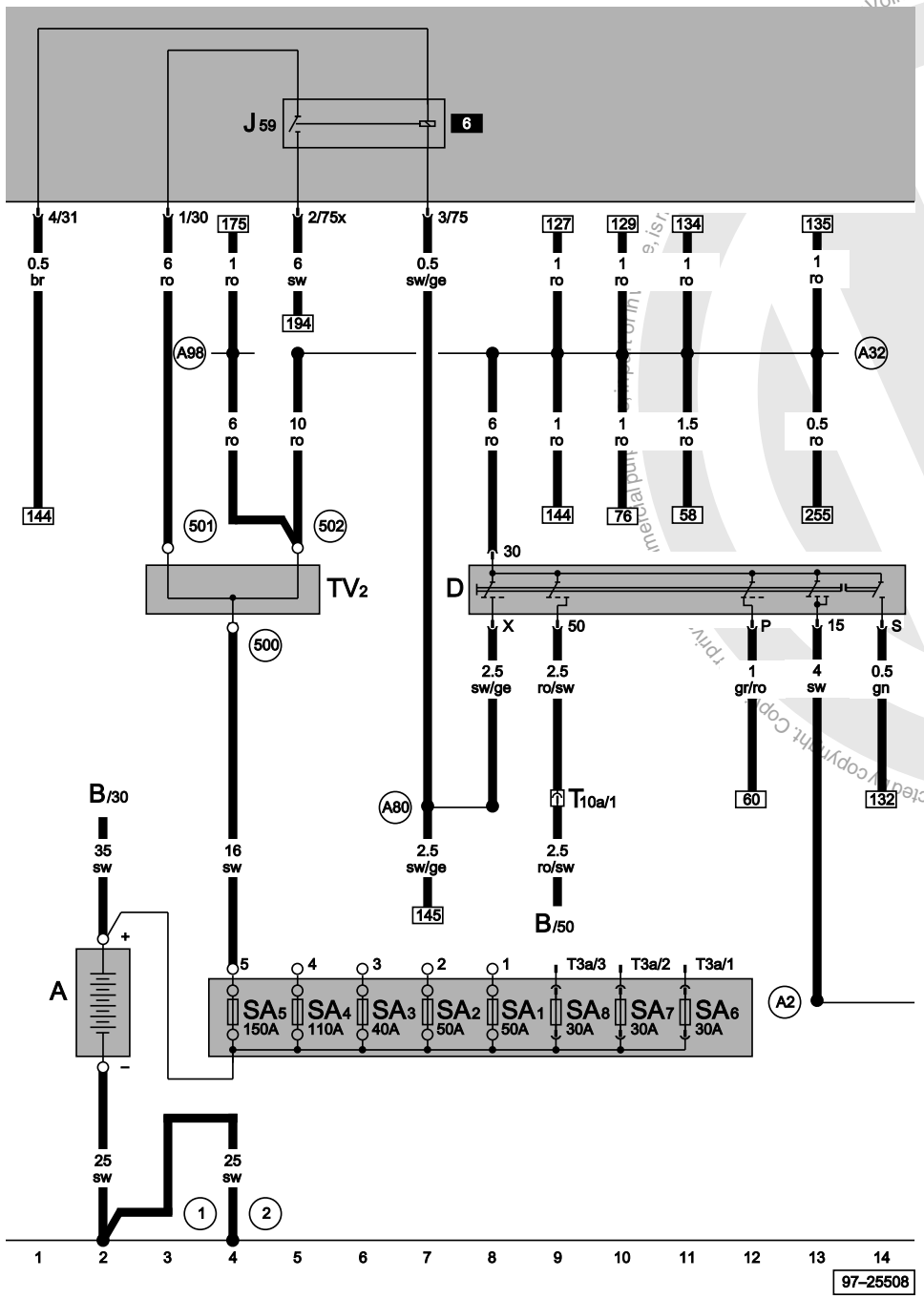

Battery, ignition/starter switch, X contact relief relay, terminal 30 junction box

A	Battery
B	Starter
D	Ignition/starter switch
J59	X contact relief relay
SA1	Fuse -1- on battery fuse box
SA2	Fuse -2- on battery fuse box
SA3	Fuse -3- on battery fuse box
SA4	Fuse -4- on battery fuse box
SA5	Fuse -5- on battery fuse box
SA6	Fuse -6- on battery fuse box
SA7	Fuse -7- on battery fuse box
SA8	Fuse -2- on battery fuse box
TV2	Terminal 30 junction box
T3a	3-pin connector, in battery
T10a	10-pin connector, black, in protective housing for connectors
1	Earth strap, battery - body
2	Earth strap, gearbox - body
500	Screw connection -1- (30), on relay plate
501	Screw connection -2- (30), on relay plate
502	Screw connection -1- (30a), on relay plate
A2	Positive (+) connection (15), in dash panel wiring harness
A32	Positive (+) connection (30), in dash panel wiring harness
A80	Connection -1- (X), in dash panel wiring harness
A98	Positive (+) connection -4- (30), in dash panel wiring harness

ws	=	white
sw	=	black
ro	=	red
br	=	brown
gn	=	green
bl	=	blue
gr	=	grey
li	=	purple
ge	=	yellow
or	=	orange
rs	=	pink

satelettronica

Control unit with display in dash panel insert, belt switch, driver's side, lights switched on warning buzzer alternator warning lamp, seat belt warning system warning lamp

C	Alternator
E24	Belt switch, driver's side
H16	Lights switched on warning buzzer
J...	Engine control units
J285	Control unit with display in dash panel insert
K2	Alternator warning lamp
K19	Seat belt warning system warning lamp
SB27	Fuse -27- on fuse box
SB29	Fuse -29- on fuse box
T10c	10-pin connector, brown, in protective housing for connectors
T10g	10-pin connector, red, in protective housing for connectors
T10i	10-pin connector, orange, in protective housing for connectors
T10j	10-pin connector, grey, in protective housing for connectors
T32	32-pin connector, blue
A2	Positive (+) connection (15), in dash panel wiring harness
A27	Connection (speed signal), in dash panel wiring harness
A38	Positive (+) connection -2- (15a), in dash panel wiring harness

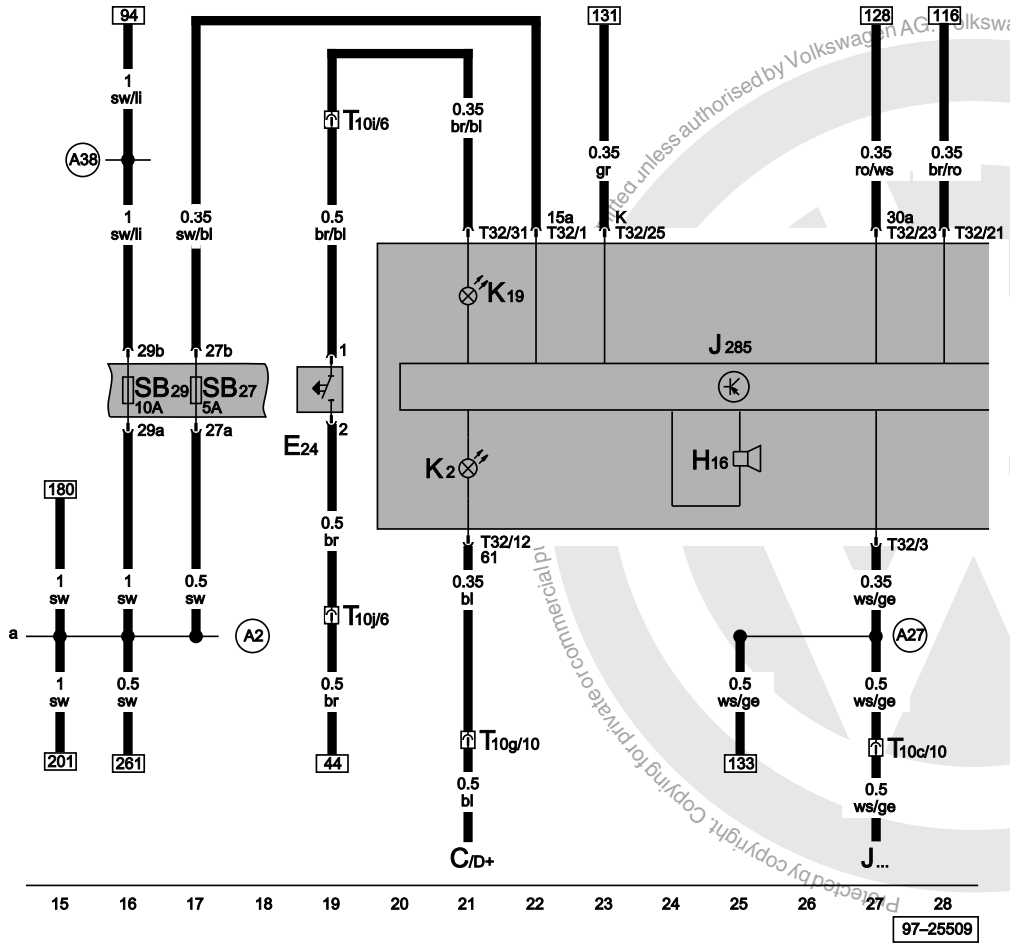

ws	=	white
sw	=	black
ro	=	red
br	=	brown
gn	=	green
bl	=	blue
gr	=	grey
li	=	purple
ge	=	yellow
or	=	orange
rs	=	pink

satelettronica

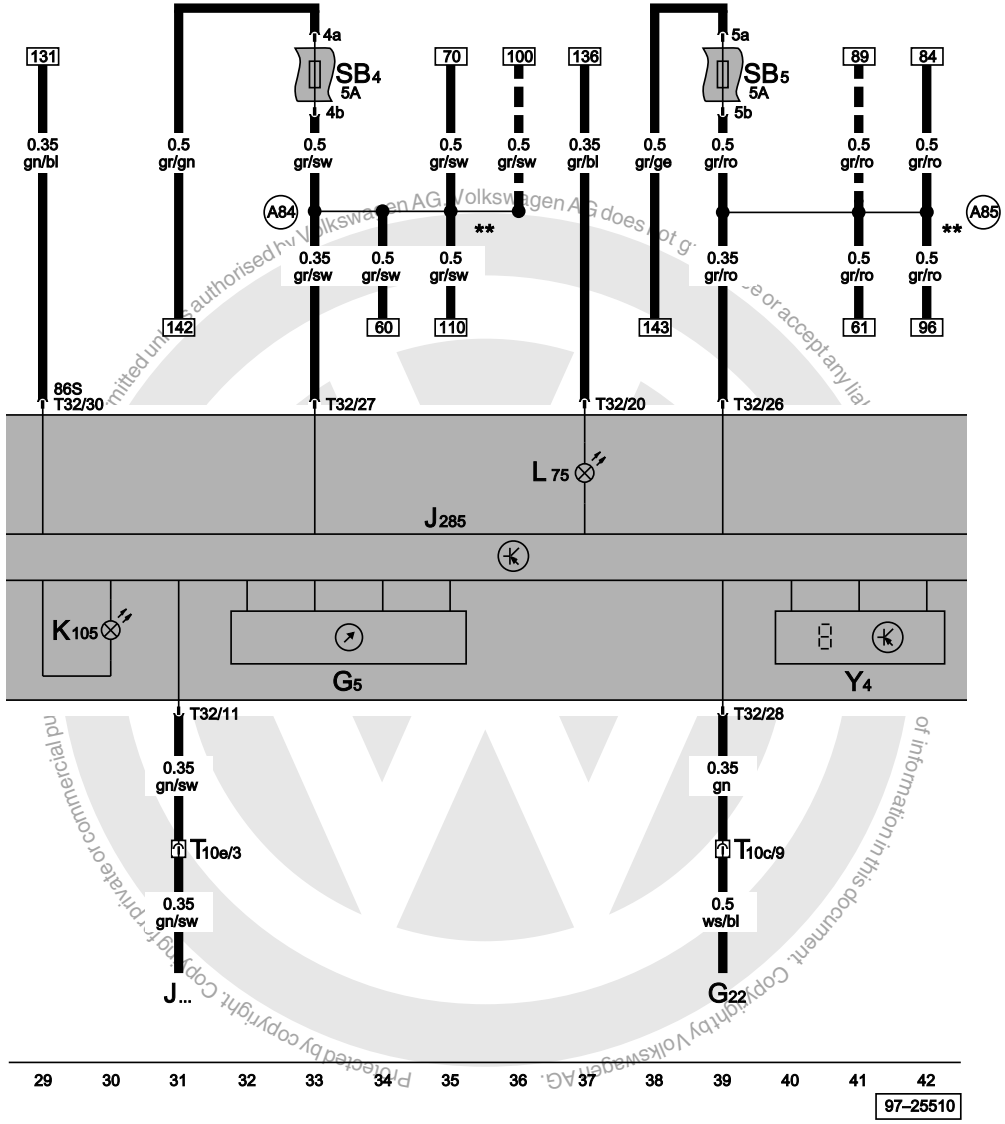

Control unit with display in dash panel insert, rev. counter, reserve fuel warning lamp, digital display illumination, odometer display

G5	Rev. counter
G22	Speedometer sender (Hall sender, on gearbox)
J...	Engine control units
J285	Control unit with display in dash panel insert
K105	Reserve fuel warning lamp
L75	Digital display illumination
SB4	Fuse -4- on fuse box
SB5	Fuse -5- on fuse box
T10c	10-pin connector, brown, in protective housing for connectors
T10e	10-pin connector, green, in protective housing for connectors
T32	32-pin connector, blue
Y4	Odometer display
A84	Connection (58L), in dash panel wiring harness
A85	Connection (58R), in dash panel wiring harness
**	Only models Polo Classic
<fo:external-graphic src="/../PDOC/samba/tools/png-convert/out//slp/ft_icons/m_m_m.png" content-width="20pt" scaling="uniform"/>	Only models Polo Variant

ws	=	white
sw	=	black
ro	=	red
br	=	brown
gn	=	green
bl	=	blue
gr	=	grey
li	=	purple
ge	=	yellow
or	=	orange
rs	=	pink

satelettronica

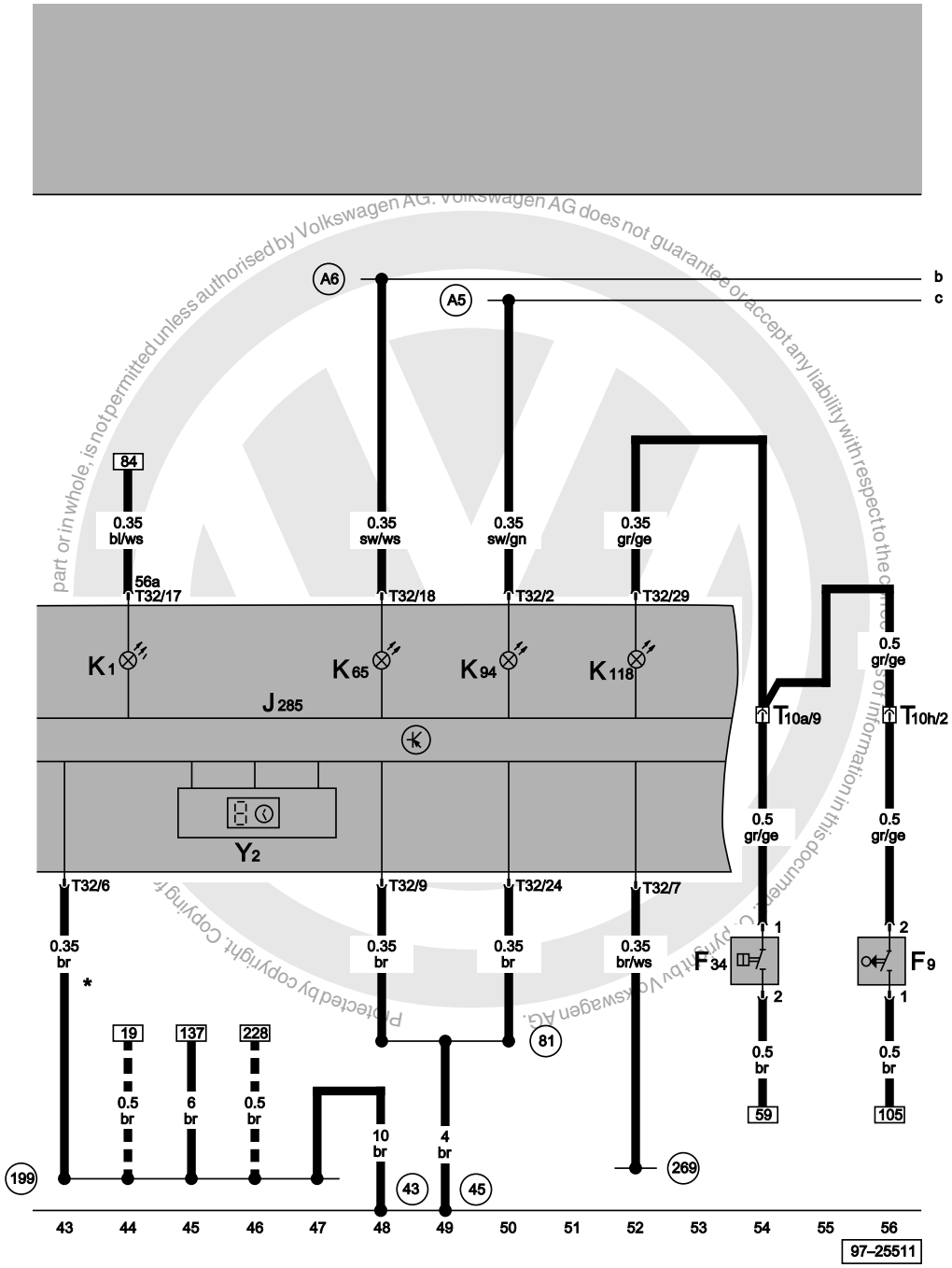

Control unit with display in dash panel insert, handbrake warning switch, brake fluid level warning contact, main beam warning lamp, brake system warning lamp, digital clock

F9	Handbrake warning switch
F34	Brake fluid level warning contact
J285	Control unit with display in dash panel insert
K1	Main beam warning lamp
K65	Left turn signal warning lamp
K94	Right turn signal warning lamp
K118	Brake system warning lamp
T10a	10-pin connector, black, in protective housing for connectors
T10h	10-pin connector, green, in protective housing for connectors
T32	32-pin connector, blue
Y2	Digital clock
43	Earth point, lower part of right A-pillar
45	Earth point, behind dash panel - centre
81	Earth connection -1-, in dash panel wiring harness
199	Earth connection -3-, in dash panel wiring harness
269	Earth connection (sender earth) -1-, in dash panel wiring harness
A5	Positive (+) connection (right turn signal), in dash panel wiring harness
A6	Positive (+) connection (left turn signal), in dash panel wiring harness
*	Does not apply to airbag
<fo:external-graphic src="/../PDOC/samba/tools/png-convert/out//slp/ft_icons/m_m_m.png"	Only models Polo Variant

ws = white

satelettronica

Protected by copyright. Copying, in part or in whole, is not permitted unless authorised by Volkswagen AG. Volkswagen AG does not guarantee or accept any liability with respect to the correctness of information in this document. © Copyright by Volkswagen AG.

sw	=	black	content-
ro	=	red	width="2
br	=	brown	0pt"
gn	=	green	scaling="
bl	=	blue	uniform"/
gr	=	grey	>
li	=	purple	
ge	=	yellow	
or	=	orange	
rs	=	pink	

Protected by copyright. Copying for private or commercial purposes, in part or in whole, is not permitted unless authorised by Volkswagen AG. Volkswagen AG does not guarantee or accept any liability with respect to the correctness of information in this document. Copyright by Volkswagen AG.

satelettronica

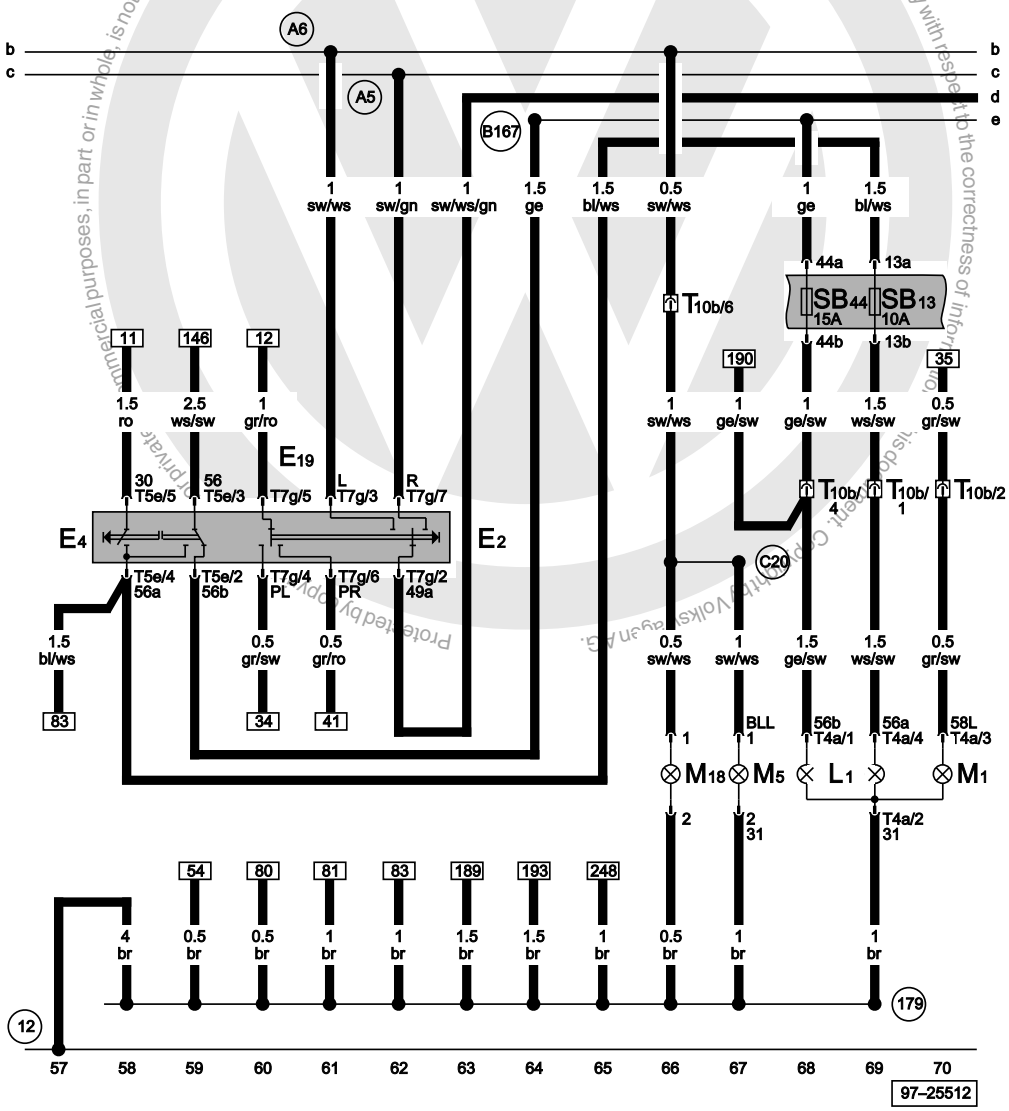

Turn signal switch, headlight dipper/flasher switch, parking light switch, twin filament bulb for headlight, left side light bulb, left

E2	Turn signal switch
E4	Headlight dipper/flasher switch
E19	Parking light switch
L1	Twin filament bulb for headlight, left
M1	Side light bulb, left
M5	Turn signal bulb, front left
M18	Side turn signal bulb, left
SB13	Fuse -13- on fuse box
SB44	Fuse -44- on fuse box
T4a	4-pin connector, in headlight, left
T5e	5-pin connector
T7g	7-pin connector
T10b	10-pin connector, white, in protective housing for connectors
12	Earth point, in engine compartment, left
179	Earth connection, in left headlight wiring harness
A5	Positive (+) connection (right turn signal), in dash panel wiring harness
A6	Positive (+) connection (left turn signal), in dash panel wiring harness
B167	Connection (56b), in interior wiring harness
C20	Connection (turn signal, left), in headlight wiring harness

ws	=	white
sw	=	black
ro	=	red
br	=	brown
gn	=	green
bl	=	blue
gr	=	grey
li	=	purple
ge	=	yellow
or	=	orange
rs	=	pink

satelettronica

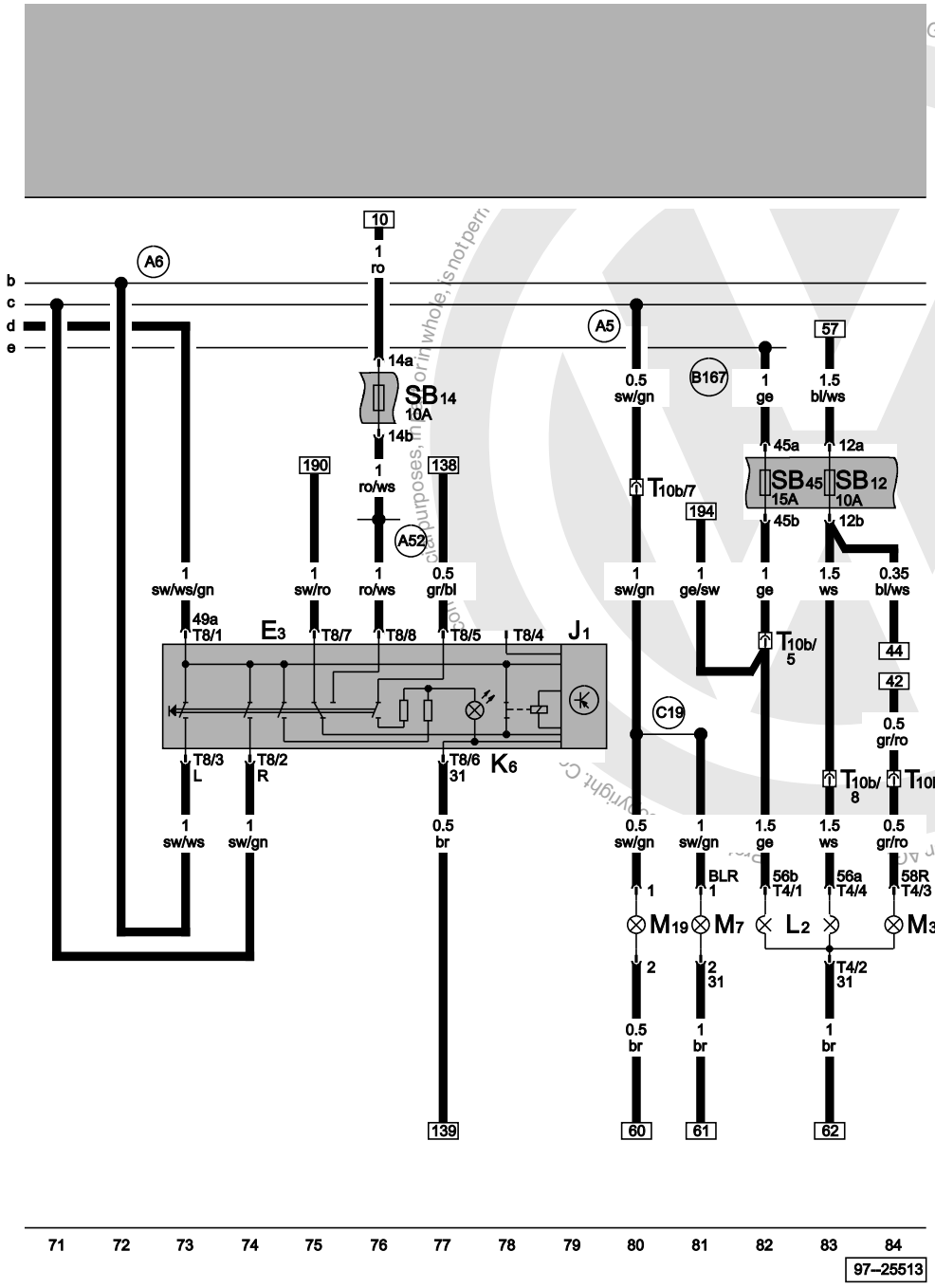

Hazard warning light switch, turn signal relay, hazard warning light system warning lamp, twin filament bulb for headlight, right side light bulb, right turn signal bulb, front right

E3	Hazard warning light switch
J1	Turn signal relay
K6	Hazard warning light system warning lamp
L2	Twin filament bulb for headlight, right
M3	Side light bulb, right
M7	Turn signal bulb, front right
M19	Side turn signal bulb, right
SB12	Fuse -12- on fuse box
SB14	Fuse -14- on fuse box
SB45	Fuse -45- on fuse box
T4	4-pin connector, in headlight, right
T8	8-pin connector
T10b	10-pin connector, white, in protective housing for connectors
A5	Positive (+) connection (right turn signal), in dash panel wiring harness
A6	Positive (+) connection (left turn signal), in dash panel wiring harness
A52	Positive (+) connection -2- (30), in dash panel wiring harness
B167	Connection (56b), in interior wiring harness
C19	Connection -1- (turn signal, right), in headlight wiring harness

ws	=	white
sw	=	black
ro	=	red
br	=	brown
gn	=	green
bl	=	blue
gr	=	grey
li	=	purple
ge	=	yellow
or	=	orange
rs	=	pink

satelettronica

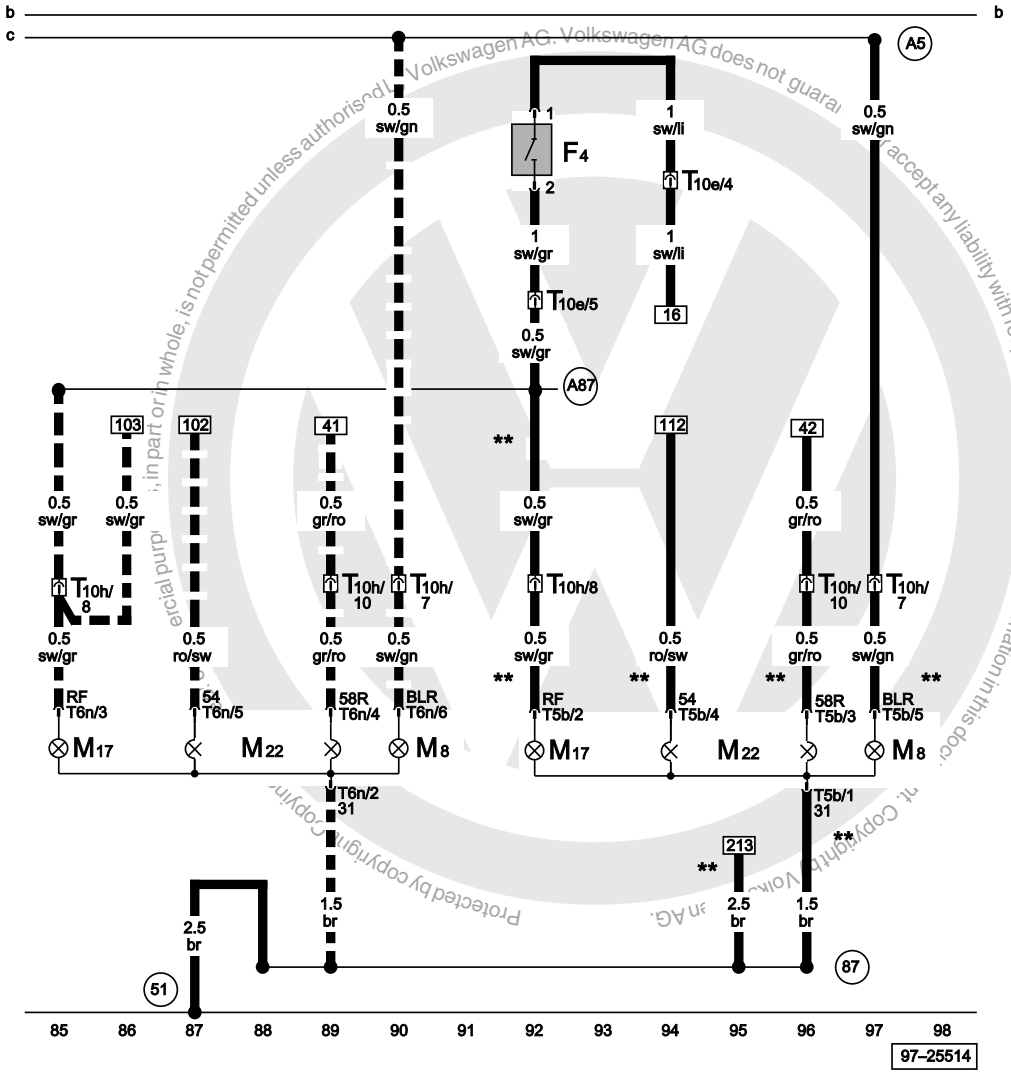

Reversing light switch, turn signal bulb, rear right reversing light bulb, right brake and tail light bulb, right

F4	Reversing light switch
M8	Turn signal bulb, rear right
M17	Reversing light bulb, right
M22	Brake and tail light bulb, right
T5b	5-pin connector
T6n	6-pin connector
T10e	10-pin connector, green, in protective housing for connectors
T10h	10-pin connector, green, in protective housing for connectors
51	Earth point, in right luggage compartment
87	Earth connection -2-, in rear wiring harness
A5	Positive (+) connection (right turn signal), in dash panel wiring harness
A87	Connection (reversing light), in dash panel wiring harness
**	Only models Polo Classic
<fo:external-graphic src="/../PDOC/samba/tools/png-convert/out//slp/ft_icons/m_m_m.png" content-width="20pt" scaling="uniform"/>	Only models Polo Variant

ws	=	white
sw	=	black
ro	=	red
br	=	brown
gn	=	green
bl	=	blue
gr	=	grey
li	=	purple
ge	=	yellow
or	=	orange
rs	=	pink

satelettronica

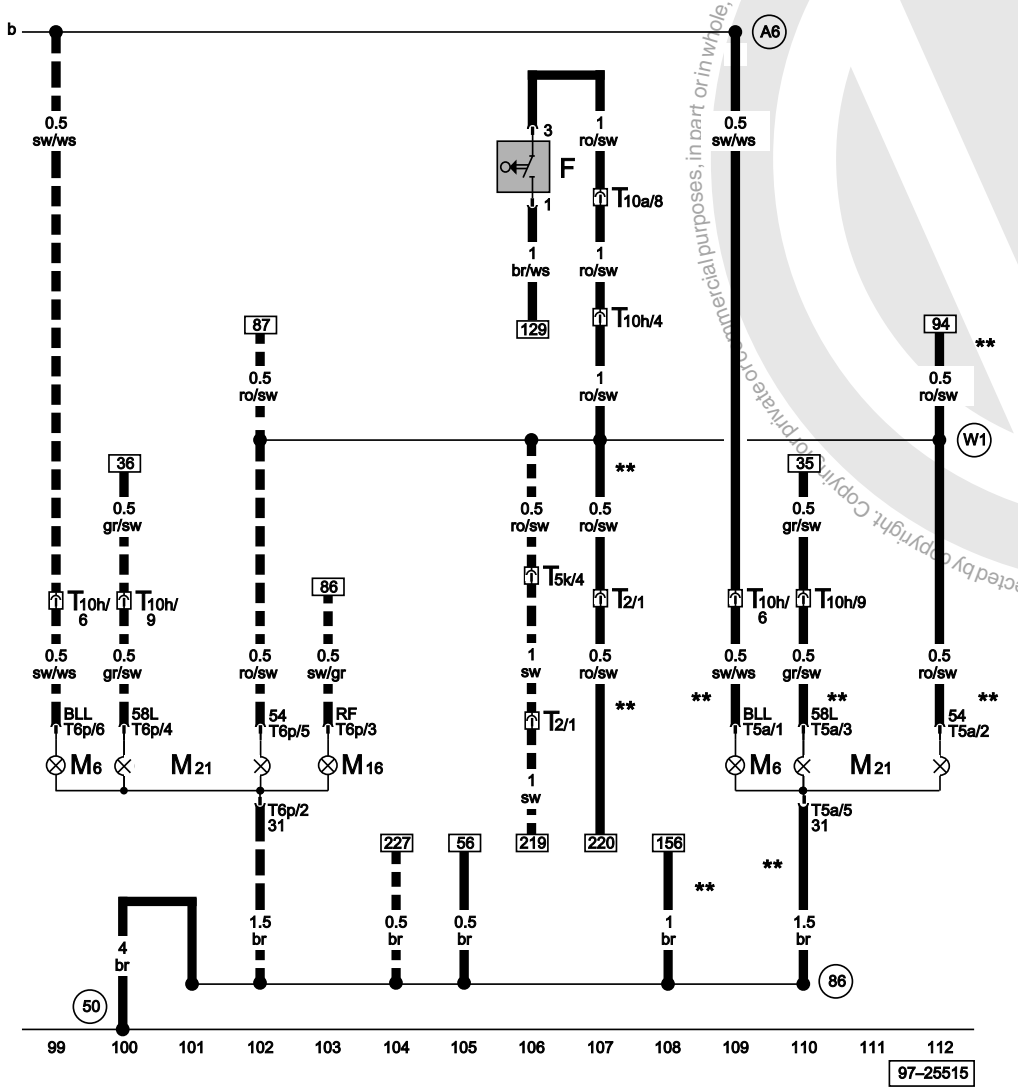

Brake light switch, turn signal bulb, rear left reversing light bulb, left brake and tail light bulb, left

F	Brake light switch
M6	Turn signal bulb, rear left
M16	Reversing light bulb, left
M21	Brake and tail light bulb, left
T2	2-pin connector
T5a	5-pin connector
T5k	5-pin connector, black, in C pillar, right
T6p	6-pin connector
T10a	10-pin connector, black, in protective housing for connectors
T10h	10-pin connector, green, in protective housing for connectors
50	Earth point, in left luggage compartment
86	Earth connection -1-, in rear wiring harness
A6	Positive (+) connection (left turn signal), in dash panel wiring harness
W1	Positive (+) connection (54), in rear wiring harness
**	Only models Polo Classic
<fo:external-graphic src="../PDOC/samba/tools/png-convert/out//slp/ft_icons/m_m_m.png" content-width="20pt" scaling="uniform"/>	Only models Polo Variant

ws	=	white
sw	=	black
ro	=	red
br	=	brown
gn	=	green
bl	=	blue
gr	=	grey
li	=	purple
ge	=	yellow
or	=	orange
rs	=	pink

Protected by copyright. Copyright by Volkswagen AG.
Volkswagen AG. Volkswagen AG does not guarantee or accept any liability with respect to the correctness of information in this document. Copyright by Volkswagen AG.
satelettronica

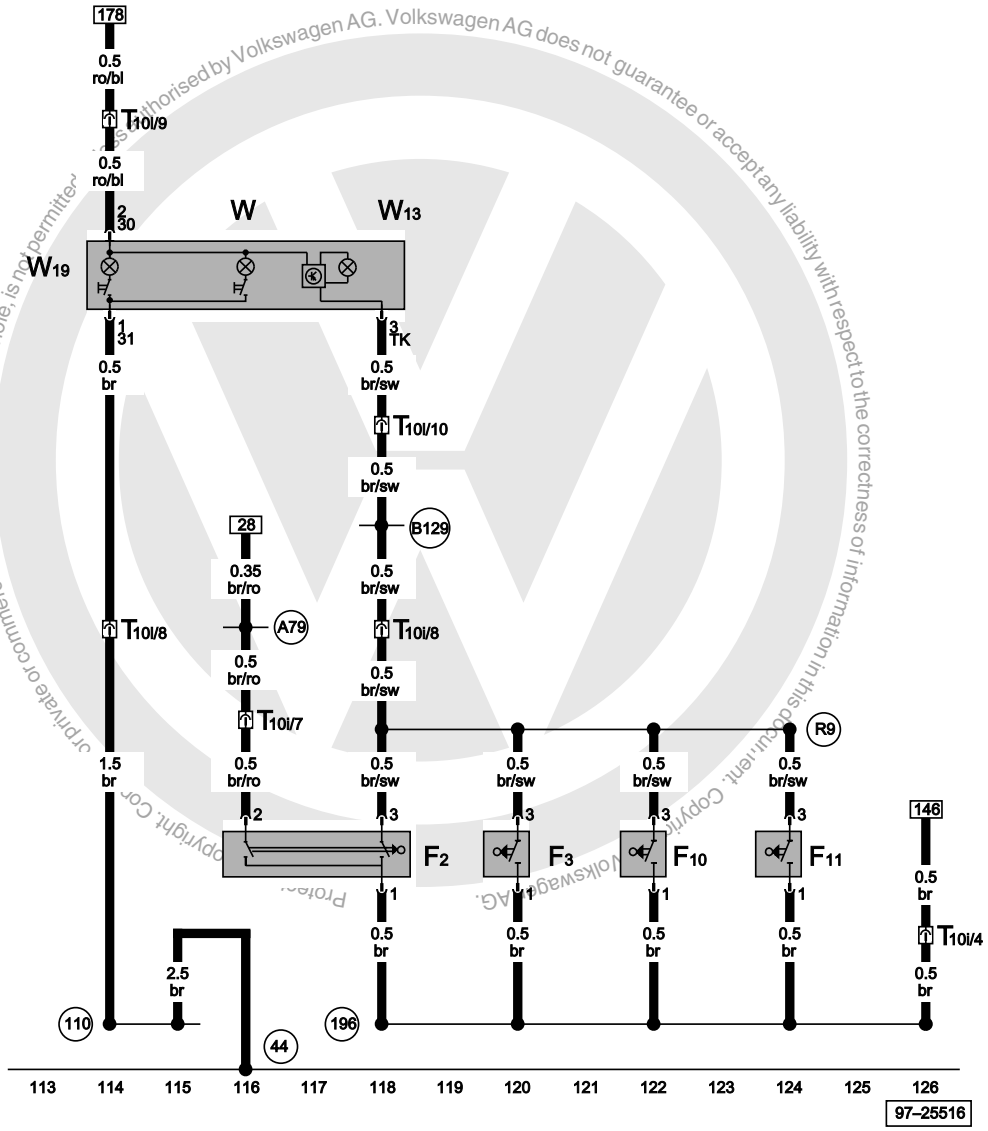

Door contact switch driver's side, door contact switch front passenger's side, door contact switch rear left, door contact switch rear right, front interior light

F2	Door contact switch, driver's side
F3	Door contact switch, front passenger's side
F10	Rear left door contact switch
F11	Rear right door contact switch
T10i	10-pin connector, orange, in protective housing for connectors
T10l	10-pin connector, black, left A pillar
W	Interior light, front
W13	Front passenger reading lamp
W19	Reading lamp, driver's side
44	Earth point, lower part of left A-pillar
110	Earth connection -2-, in instruments wiring harness
196	Earth connection -3-, in rear wiring harness
A79	Connection (hot light switch), in dash panel wiring harness
B129	Connection (interior light, 311), in interior wiring harness
R9	Connection (door contact switch), in rear wiring harness

ws	=	white
sw	=	black
ro	=	red
br	=	brown
gn	=	green
bl	=	blue
gr	=	grey
li	=	purple
ge	=	yellow
or	=	orange
rs	=	pink

satelettronica

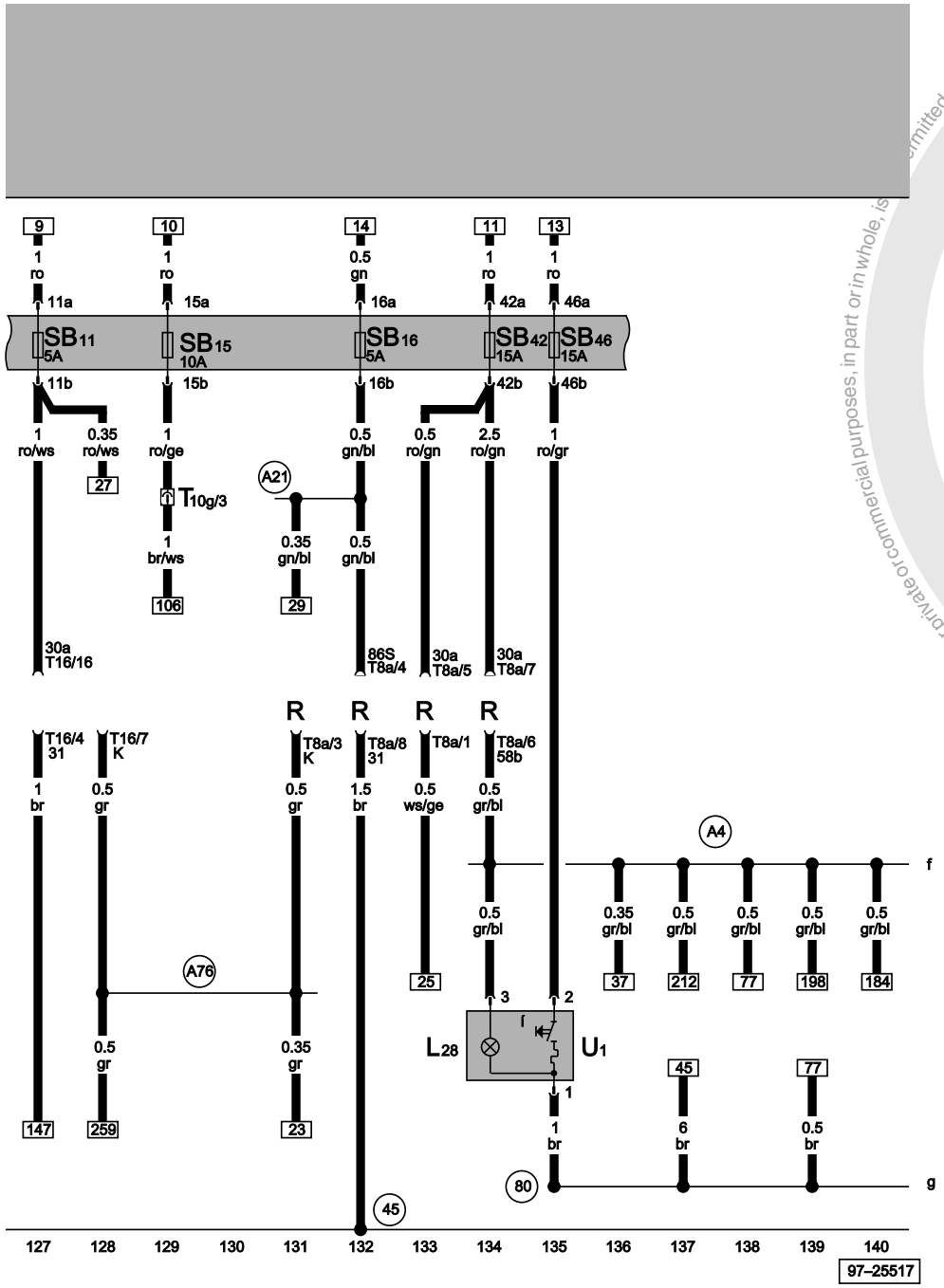

Cigarette lighter light bulb, radio, cigarette lighter self-diagnosis connection

L28	Cigarette lighter light bulb
R	Radio
SB11	Fuse -11- on fuse box
SB15	Fuse -15- on fuse box
SB16	Fuse -16- on fuse box
SB42	Fuse -42- on fuse box
SB46	Fuse -46- on fuse box
T8a	8-pin connector
T10g	10-pin connector, red, in protective housing for connectors
T16	16-pin connector, self-diagnosis connection in lower console under left
U1	Cigarette lighter
45	Earth point, behind dash panel - centre
80	Earth connection -1-, in instruments wiring harness
A4	Positive (+) connection (58b), in dash panel wiring harness
A21	Connection (86s), in dash panel wiring harness
A76	Connection (diagnosis wire K), in dash panel wiring harness

ws	=	white
sw	=	black
ro	=	red
br	=	brown
gn	=	green
bl	=	blue
gr	=	grey
li	=	purple
ge	=	yellow
or	=	orange
rs	=	pink

Protected by copyright. Copying for private or commercial purposes, in part or in whole, is not permitted unless authorised by Volkswagen AG. Volkswagen AG does not guarantee or accept any liability with respect to the correctness of information in this document. Copyright by Volkswagen AG.

satelettronica

Lighting switch, rear fog lights, lighting switch light bulb

E1 Lighting switch
L9 Lighting switch light bulb
T17 17-pin connector

80 Earth connection -1-, in instruments wiring harness

A4 Positive (+) connection (58b), in dash panel wiring harness

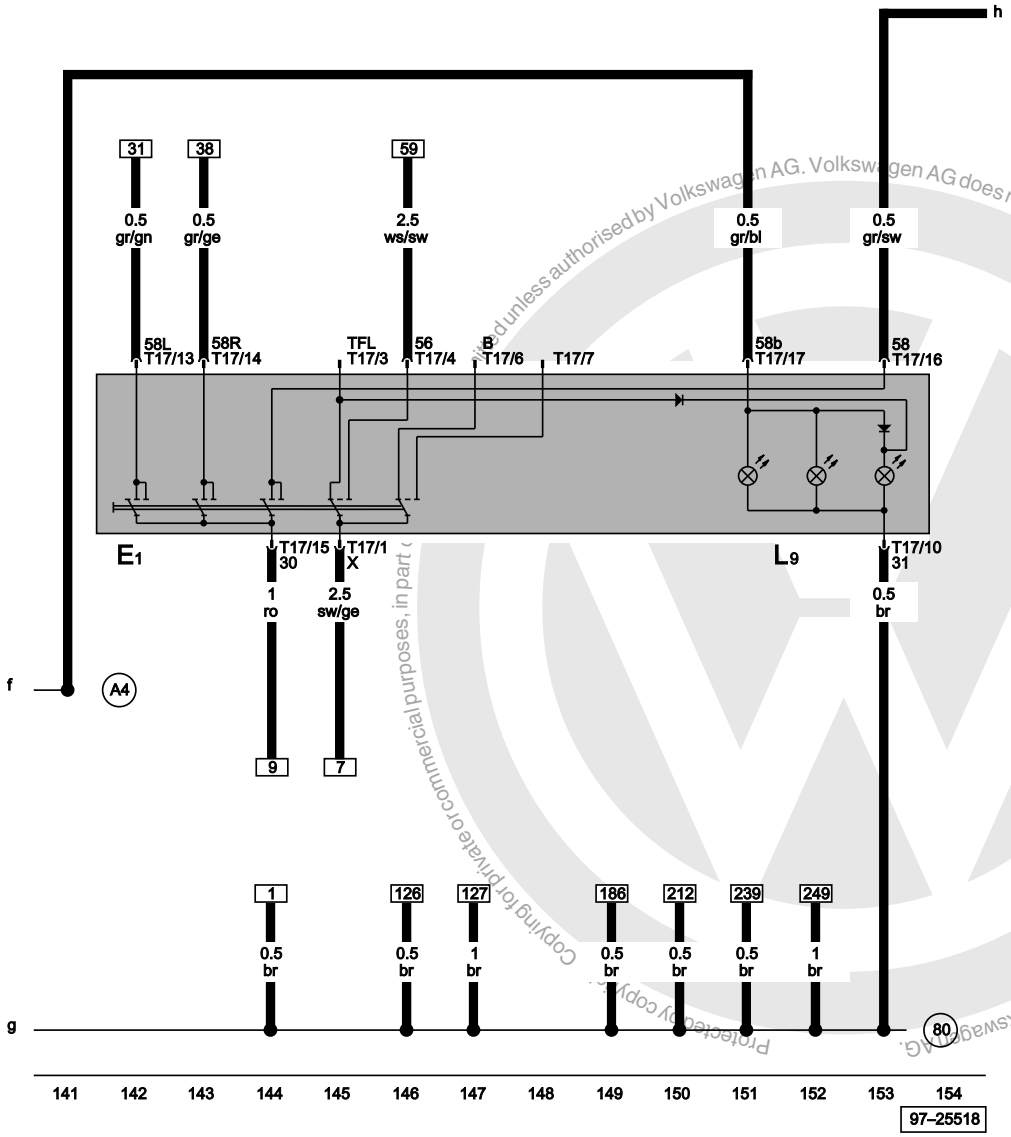

ws = white
sw = black
ro = red
br = brown
gn = green
bl = blue
gr = grey
li = purple
ge = yellow
or = orange
rs = pink

Copying for private or commercial purposes, in part or in whole, is not permitted unless authorised by Volkswagen AG. Volkswagen AG does not guarantee or accept any liability with respect to the correctness of information in this document. Copyright by Volkswagen AG.
Protected by copyright.
satelettronica

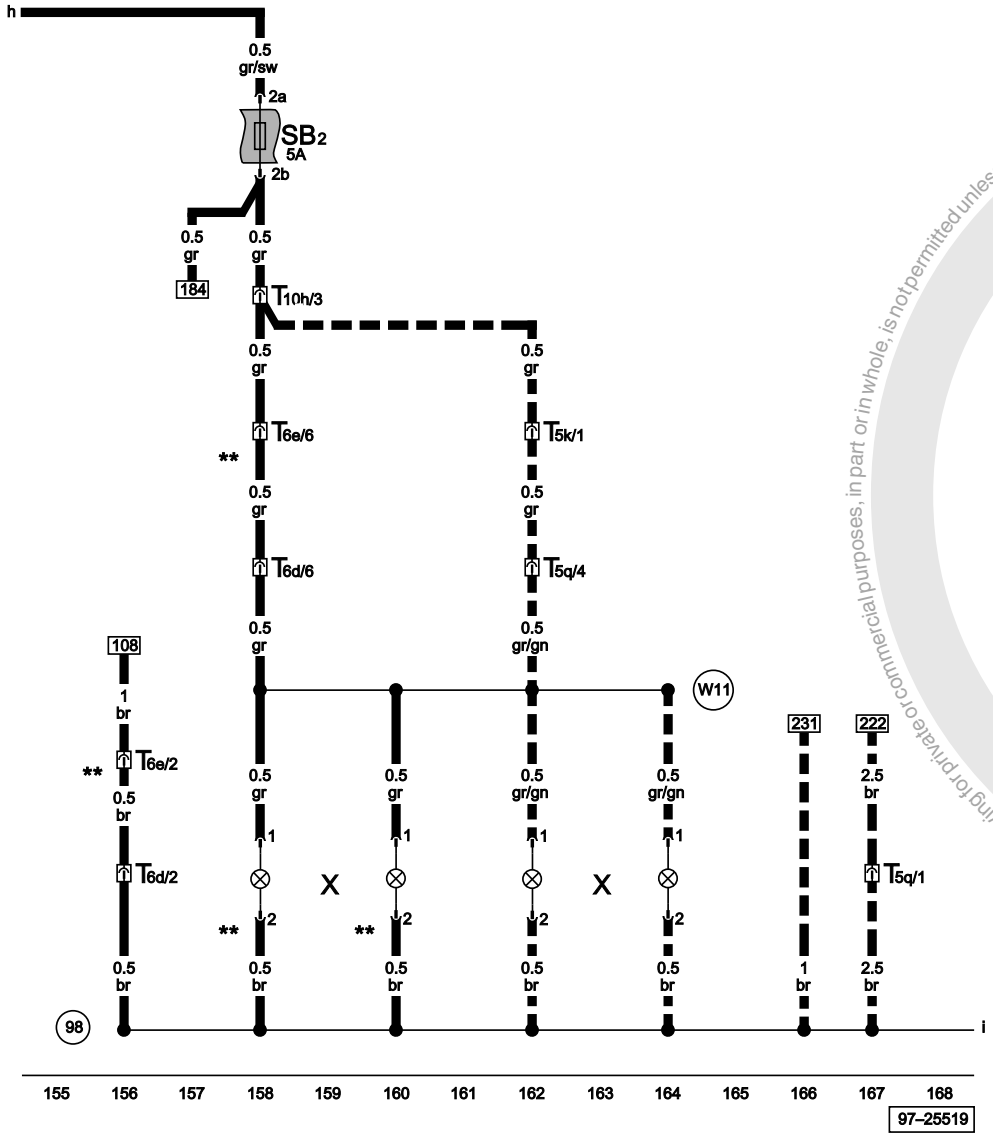

Number plate light

SB2	Fuse -2- on fuse box
T5k	5-pin connector, black, in C pillar, right
T5q	5-pin connector, black, in tailgate/bootlid, rear right
T6d	6-pin connector, in tailgate/bootlid
T6e	6-pin connector, on left C-pillar
T10h	10-pin connector, green, in protective housing for connectors
X	Number plate light
98	Earth connection, in tailgate/bootlid wiring harness
W11	Connection (58), in tailgate/bootlid wiring harness
**	Only models Polo Classic
<fo:external-graphic src="/../PDOC/samba/tools/png-convert/out//slp/ft_icons/m_m_m.png" content-width="20pt" scaling="uniform"/>	Only models Polo Variant

ws	=	white
sw	=	black
ro	=	red
br	=	brown
gn	=	green
bl	=	blue
gr	=	grey
li	=	purple
ge	=	yellow
or	=	orange
rs	=	pink

Protected copyright. Copyright by Volkswagen AG. Volkswagen AG does not guarantee or accept any liability with respect to the correctness of information in this document. Copyright by Volkswagen AG. Protected copyright. Copying for private or commercial purposes, in part or in whole, is not permitted unless authorised by Volkswagen AG.
satelettronica

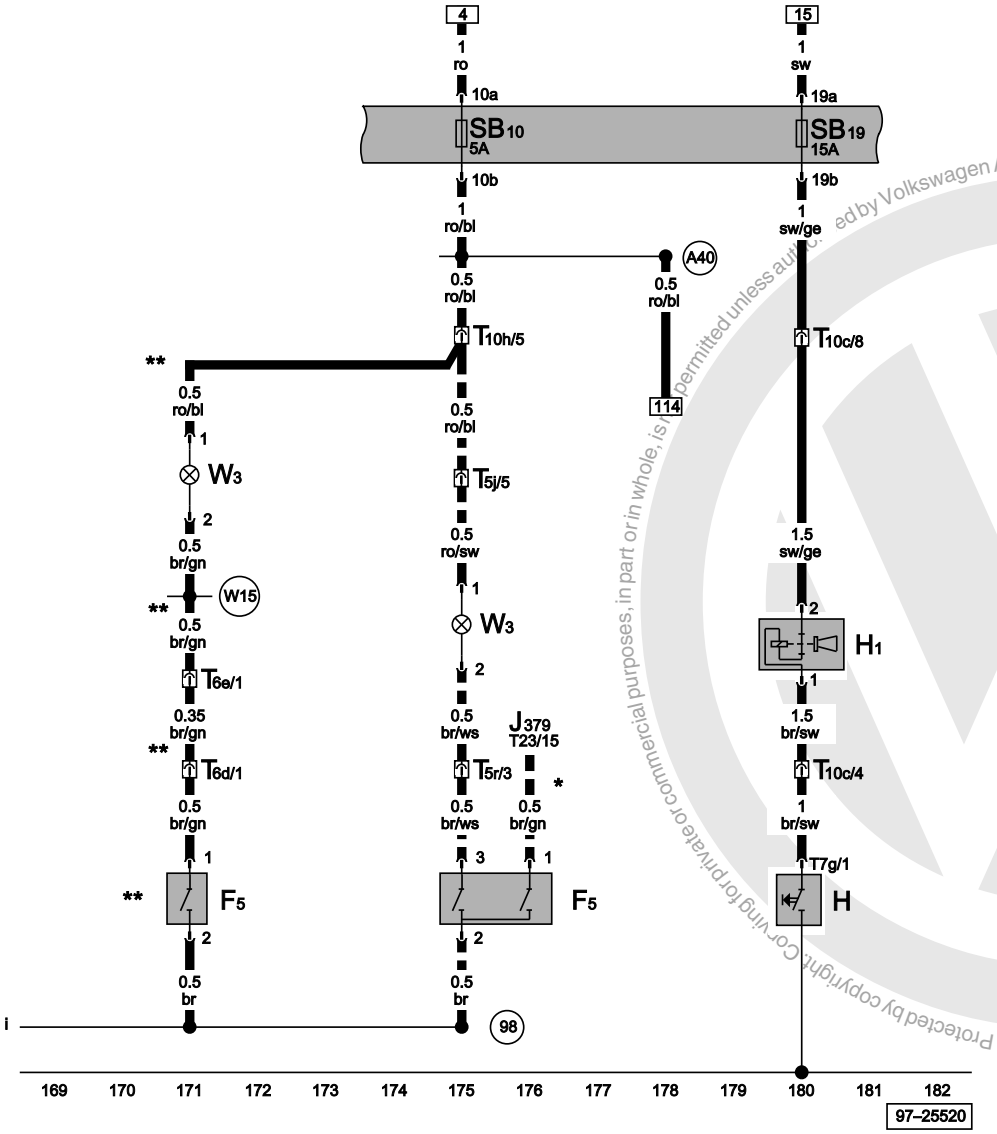

Luggage compartment light switch, horn plate horn, luggage compartment light

F5	Luggage compartment light switch
H	Horn plate
H1	Horn/dual tone horn
J379	Central locking and anti-theft alarm system control unit
SB10	Fuse -10- on fuse box
SB19	Fuse -19- on fuse box
T5j	5-pin connector, black, in C pillar, left
T5r	5-pin connector, black, in tailgate/bootlid, rear left
T6d	6-pin connector, in tailgate/bootlid
T6e	6-pin connector, on left C-pillar
T7g	7-pin connector
T10c	10-pin connector, brown, in protective housing for connectors
T10h	10-pin connector, green, in protective housing for connectors
T23	23-pin connector
W3	Luggage compartment light
98	Earth connection, in tailgate/bootlid wiring harness
A40	Positive (+) connection-1- (30), in instruments wiring harness
W15	Connection -1- (luggage compartment light), in rear wiring harness
*	Only models with alarm system
**	Only models Polo Classic
<fo:external-graphic src="/../PDOC/samba/tools/png-convert/out//slp/ft_icons/m_m_m.png" content-width="20pt" scaling="uniform"/>	Only models Polo Variant

ws	=	white
sw	=	black
ro	=	red
br	=	brown
gn	=	green
bl	=	blue
gr	=	grey
li	=	purple
ge	=	yellow
or	=	orange
rs	=	pink

Protected by copyright. Copying for private or commercial purposes, in part or in whole, is not permitted unless authorised by Volkswagen AG. Volkswagen AG does not guarantee or accept any liability with respect to the correctness of information in this document. Copyright by Volkswagen AG.

satelettronica

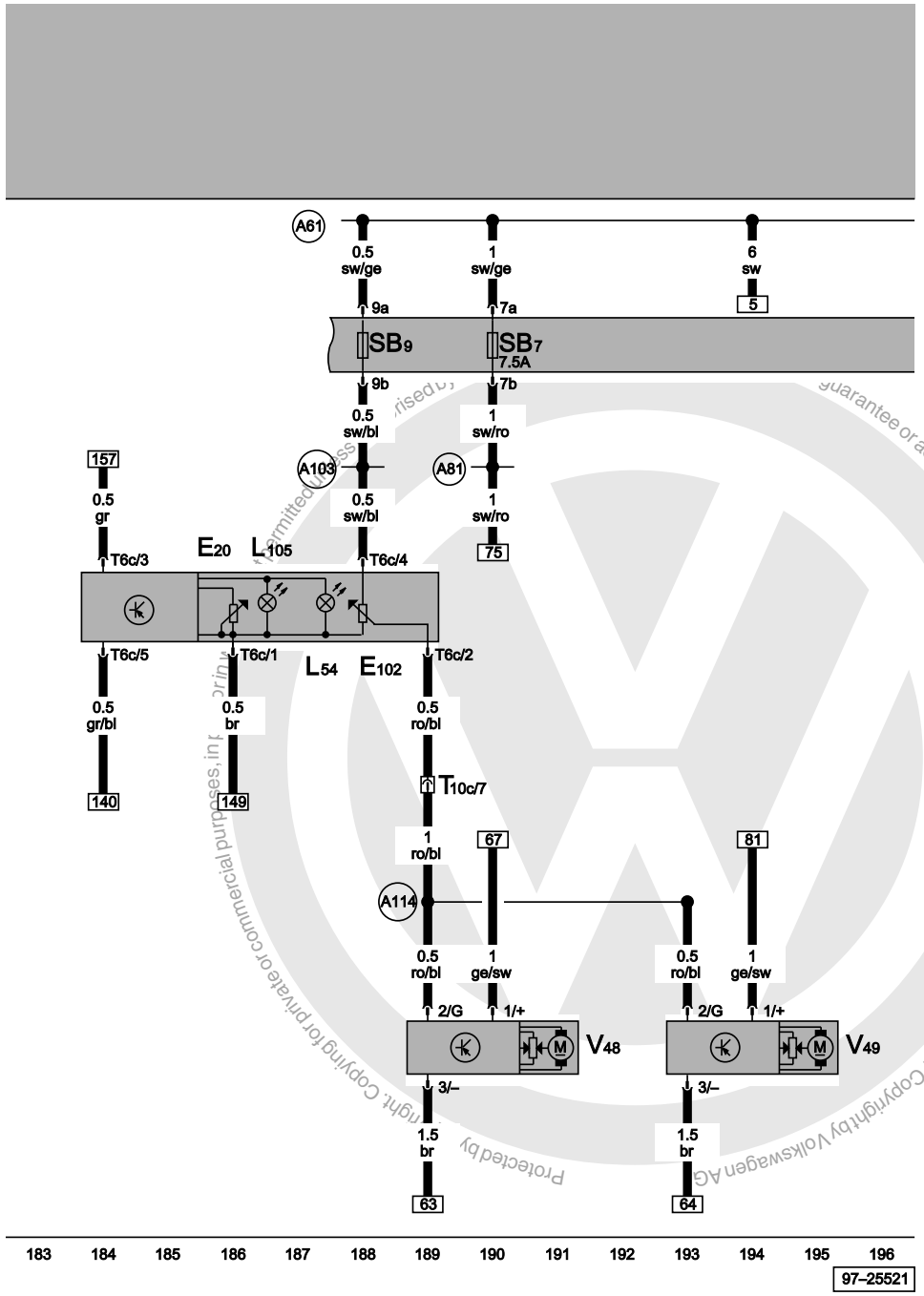

Switches and instruments - lighting control, headlight range control adjuster

E20	Switches and instruments, lighting control
E102	Headlight range control adjuster
L54	Headlight range control adjuster light bulb
L105	Illumination control switch illumination
SB7	Fuse -7- on fuse box
SB9	Fuse -9- on fuse box
T6c	6-pin connector
T10c	10-pin connector, brown, in protective housing for connectors
V48	Headlight range control motor, left
V49	Headlight range control motor, right
A61	Positive (+) connection (X), in instruments wiring harness
A81	Connection -2- (X), in dash panel wiring harness
A103	Connection -2- (56), in dash panel wiring harness
A114	Connection (headlight range control), in dash panel wiring harness

ws	=	white
sw	=	black
ro	=	red
br	=	brown
gn	=	green
bl	=	blue
gr	=	grey
li	=	purple
ge	=	yellow
or	=	orange
rs	=	pink

Protected by copyright. Copying for private or commercial purposes, in part, is not permitted unless authorised by Volkswagen AG. Copyright by Volkswagen AG. Volkswagen AG does not guarantee or accept any liability with respect to the correctness of information in this document.

satelettronica

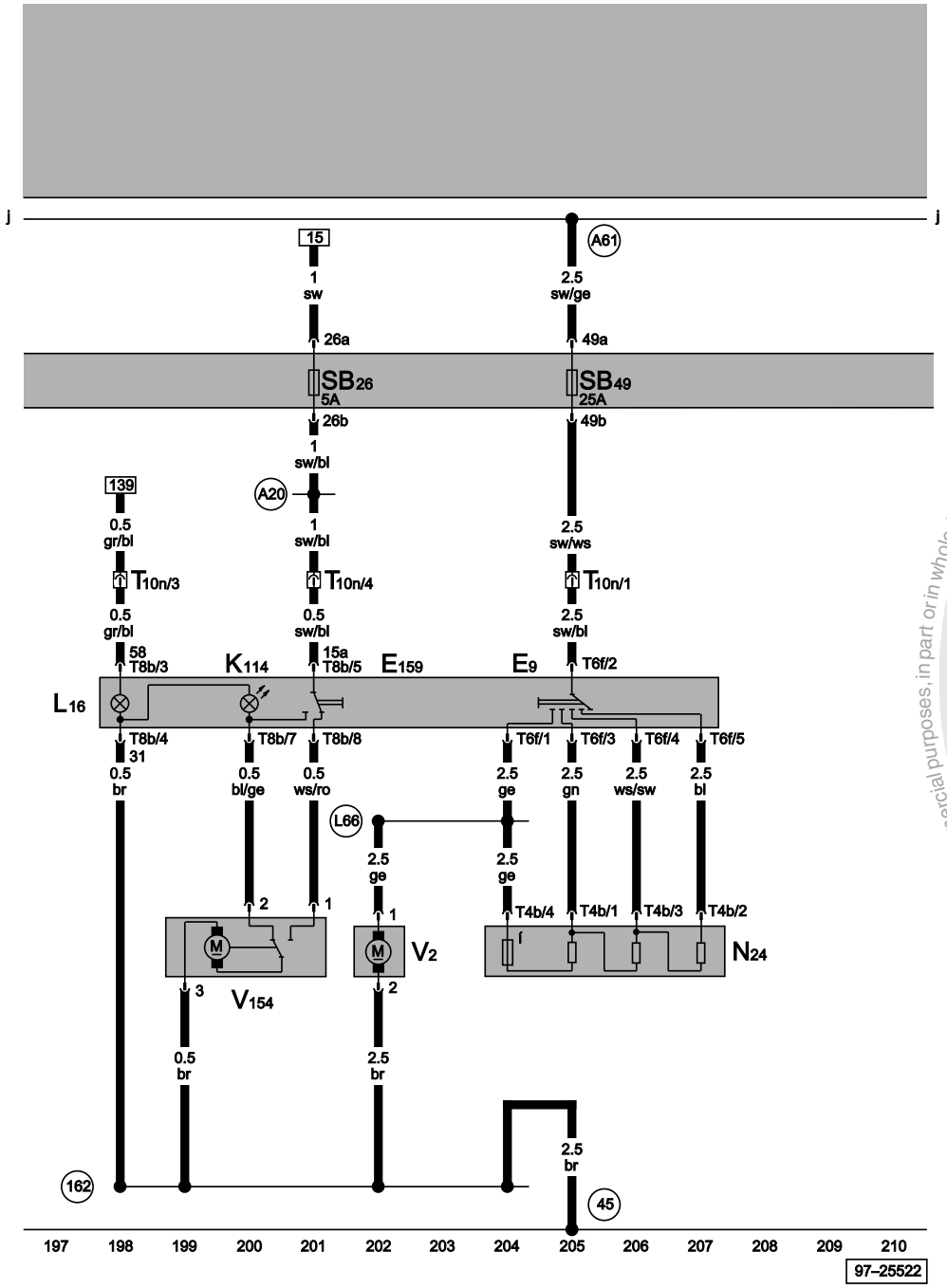

Fresh air blower switch, fresh air/air recirculating flap switch, fresh air/air recirculation warning lamp, fresh air control light bulb

E9	Fresh air blower switch
E159	Fresh air/air recirculating flap switch
K114	Fresh air/air recirculation warning lamp
L16	Fresh air control light bulb
N24	Fresh air blower with overheating fuse series resistor
SB26	Fuse -26- on fuse box
SB49	Fuse -49- on fuse box
T4b	4-pin connector
T6f	6-pin connector
T8b	8-pin connector
T10n	10-pin connector, behind dash panel, centre
V2	Fresh air blower
V154	Fresh/recirculating air flap control motor
45	Earth point, behind dash panel - centre
162	Earth connection, in blower motor wiring harness
A20	Connection (15a), in dash panel wiring harness
A61	Positive (+) connection (X), in instruments wiring harness
L66	Connection, in heater blower wiring harness

ws	=	white
sw	=	black
ro	=	red
br	=	brown
gn	=	green
bl	=	blue
gr	=	grey
li	=	purple
ge	=	yellow
or	=	orange
rs	=	pink

Protected by copyright. Copying for private or commercial purposes, in part or in whole, is not permitted unless authorised by Volkswagen AG. Volkswagen AG does not guarantee or accept any liability with respect to the correctness of information in this document. Copyright by Volkswagen AG.
satelettronica

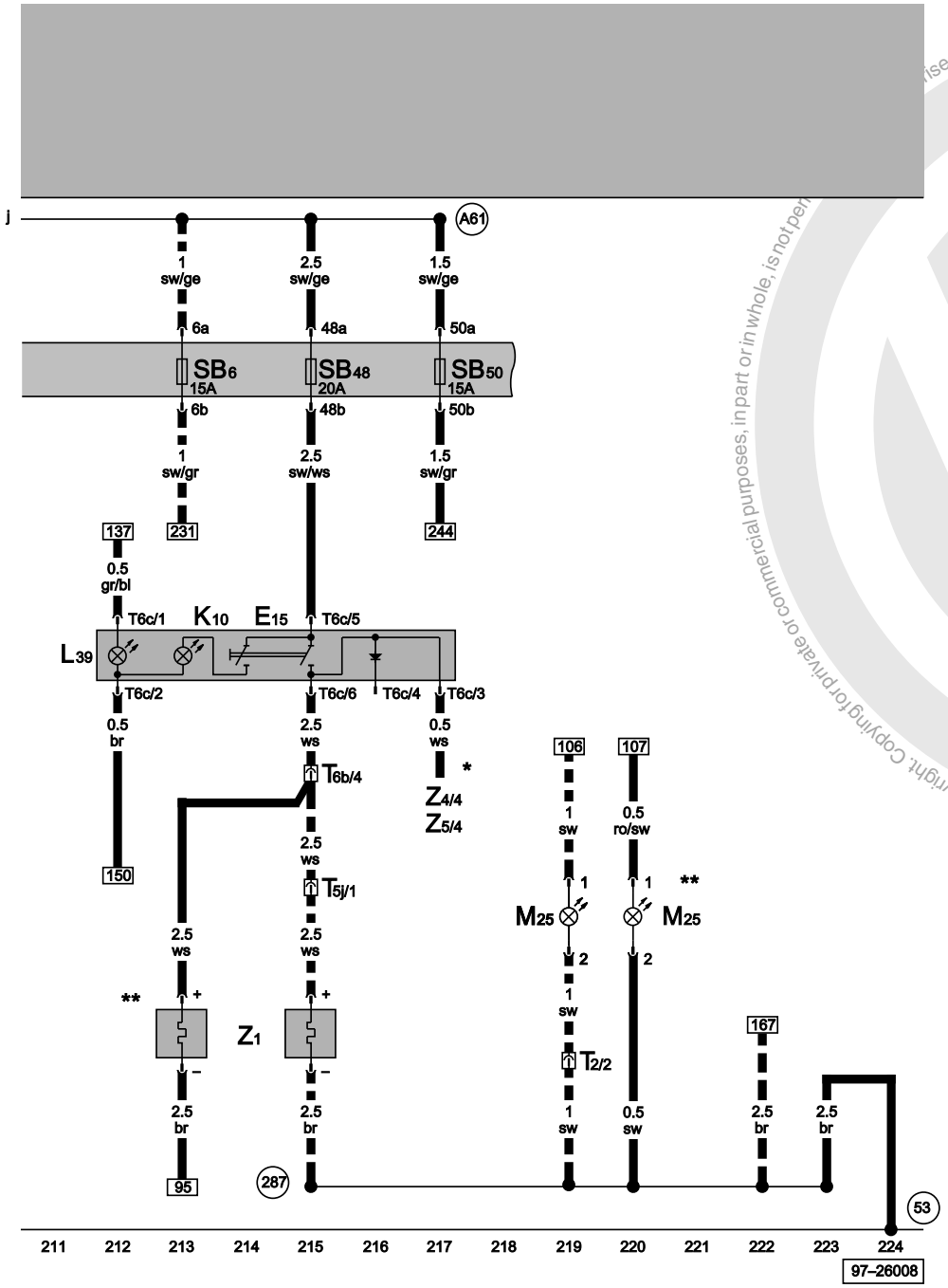

Heated rear window switch , heated rear window warning lamp, heated rear window switch bulb, high level brake light bulb, heated rear window

E15	Heated rear window switch
K10	Heated rear window warning lamp
L39	Heated rear window switch bulb
M25	High level brake light bulb
SB6	Fuse -6- on fuse box
SB48	Fuse -48- on fuse box
SB50	Fuse -50- on fuse box
T2	2-pin connector
T5j	5-pin connector, black, in C pillar, left
T6b	6-pin connector, grey, in protective housing for connectors
T6c	6-pin connector
Z1	Heated rear window
Z4	Heated exterior mirror, driver's side
Z5	Heated exterior mirror, front passenger's side
53	Earth point, in tailgate/bootlid, left
287	Earth connection, in rear lid pre - wiring wiring harness
A61	Positive (+) connection (X), in instruments wiring harness
*	Only models with adjustable exterior mirror
**	Only models Polo Classic
<fo:external-graphic src="/../PDOC/samba/tools/png-convert/out//slp/ft_icons/m_m_m.png" content-width="20pt" scaling="uniform"/>	Only models Polo Variant

ws	=	white
sw	=	black
ro	=	red
br	=	brown
gn	=	green
bl	=	blue
gr	=	grey
li = purple
ge = yellow
or = orange
rs = pink

Protected by copyright. Copying for private or commercial purposes, in part or in whole, is not permitted unless authorised by Volkswagen AG. Volkswagen AG does not guarantee or accept any liability with respect to the correctness of information in this document. Copyright by Volkswagen AG.
satelettronica

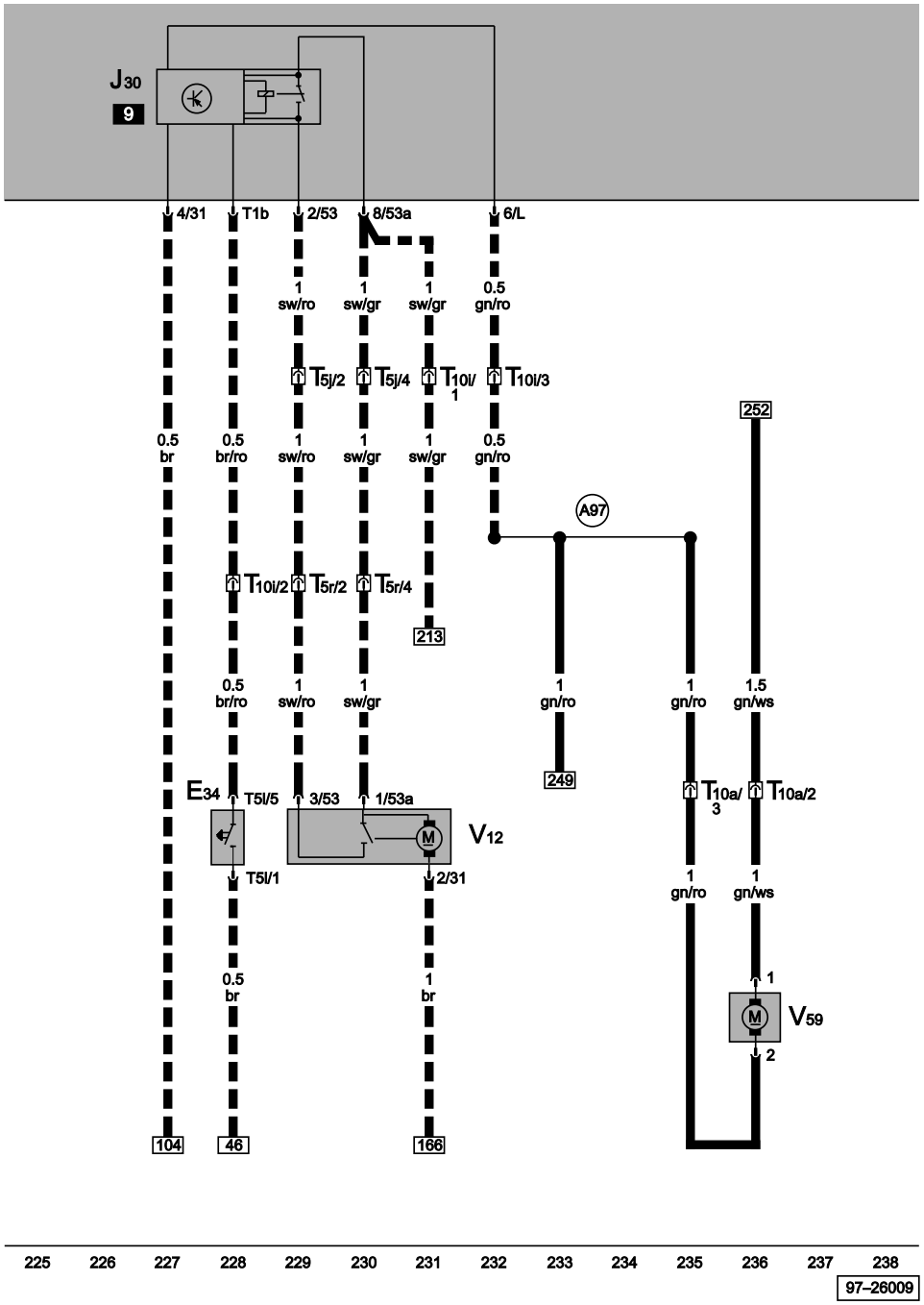

Rear wiper switch, rear window wiper/washer relay, rear window wiper motor, windscreen and rear window washer pump

E34	Rear wiper switch
J30	Rear window wiper/washer relay
T1b	Single connector, black, rear window wiper/washer relay
T5j	5-pin connector, black, in C pillar, left
T5l	5-pin connector, black, under steering wheel
T5r	5-pin connector, black, in tailgate/bootlid, rear left
T10a	10-pin connector, black, in protective housing for connectors
T10i	10-pin connector, orange, in protective housing for connectors
V12	Rear window wiper motor
V59	Windscreen and rear window washer pump
A97	Connection (53), in dash panel wiring harness

<fo:external-graphic src="/../PDOC/samba/tools/png-convert/out//slp/ft_icons/m_m_m.png" content-width="20pt" scaling="uniform"/>

Only models Polo Variant

ws	=	white
sw	=	black
ro	=	red
br	=	brown
gn	=	green
bl	=	blue
gr	=	grey
li	=	purple
ge	=	yellow
or	=	orange
rs	=	pink

satelettronica
Protected by copyright. Copyright by Volkswagen AG. Copying for private or commercial purposes, in part or in whole, is not permitted unless authorised by Volkswagen AG. Volkswagen AG does not guarantee or accept any liability with respect to the correctness of information in this document.

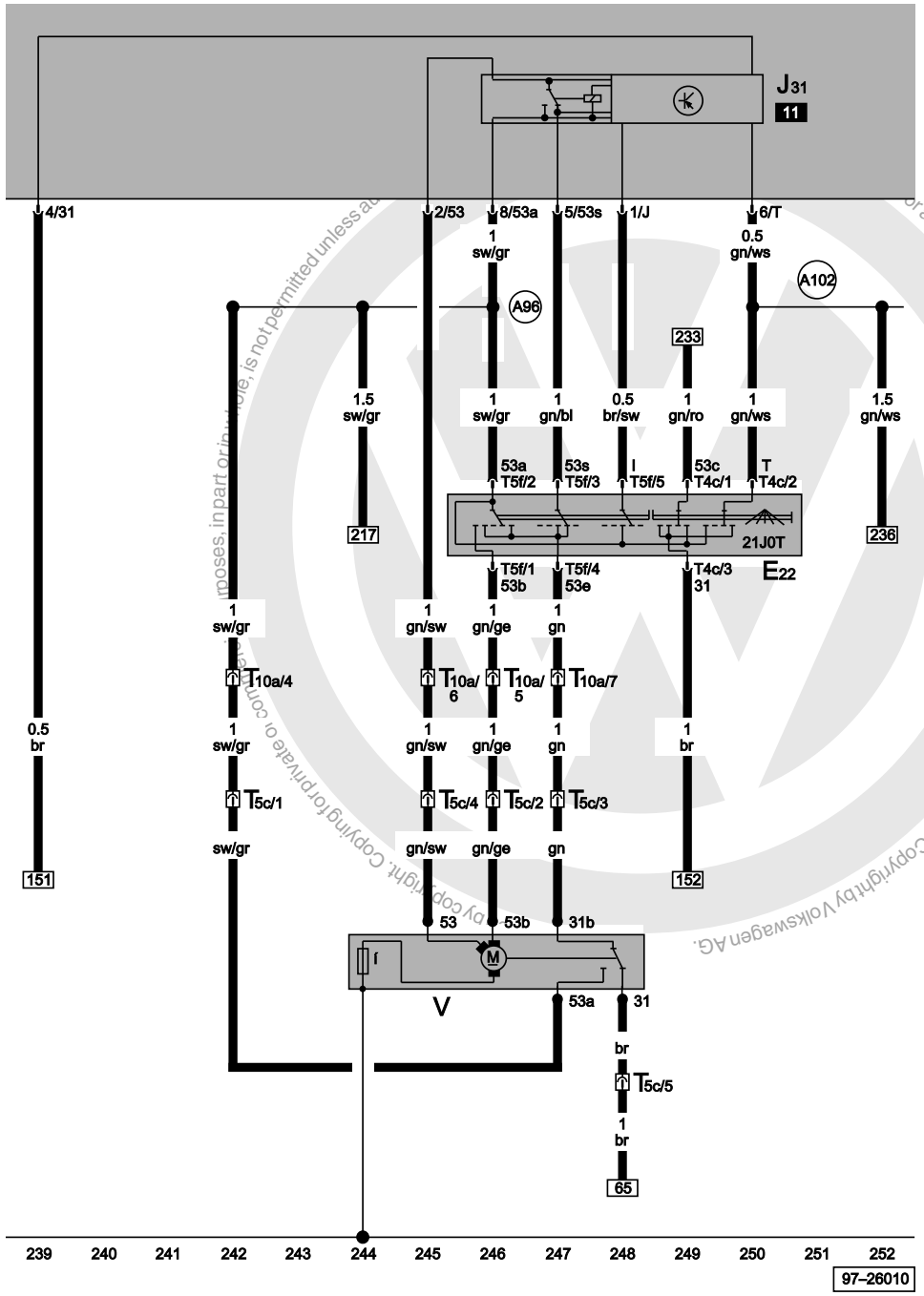

Intermittent wiper switch, automatic intermittent wash/ wipe relay, windscreen wiper motor

E22	Intermittent wiper switch
J31	Automatic intermittent wash/wipe relay
T4c	4-pin connector
T5c	5-pin connector, on windscreen wiper motor
T5f	5-pin connector, in engine
T10a	10-pin connector, black, in protective housing for connectors
V	Windscreen wiper motor
A96	Connection (53a), in dash panel wiring harness
A102	Connection (windscreen wiper), in dash panel wiring harness

ws	=	white
sw	=	black
ro	=	red
br	=	brown
gn	=	green
bl	=	blue
gr	=	grey
li	=	purple
ge	=	yellow
or	=	orange
rs	=	pink

satelettronica

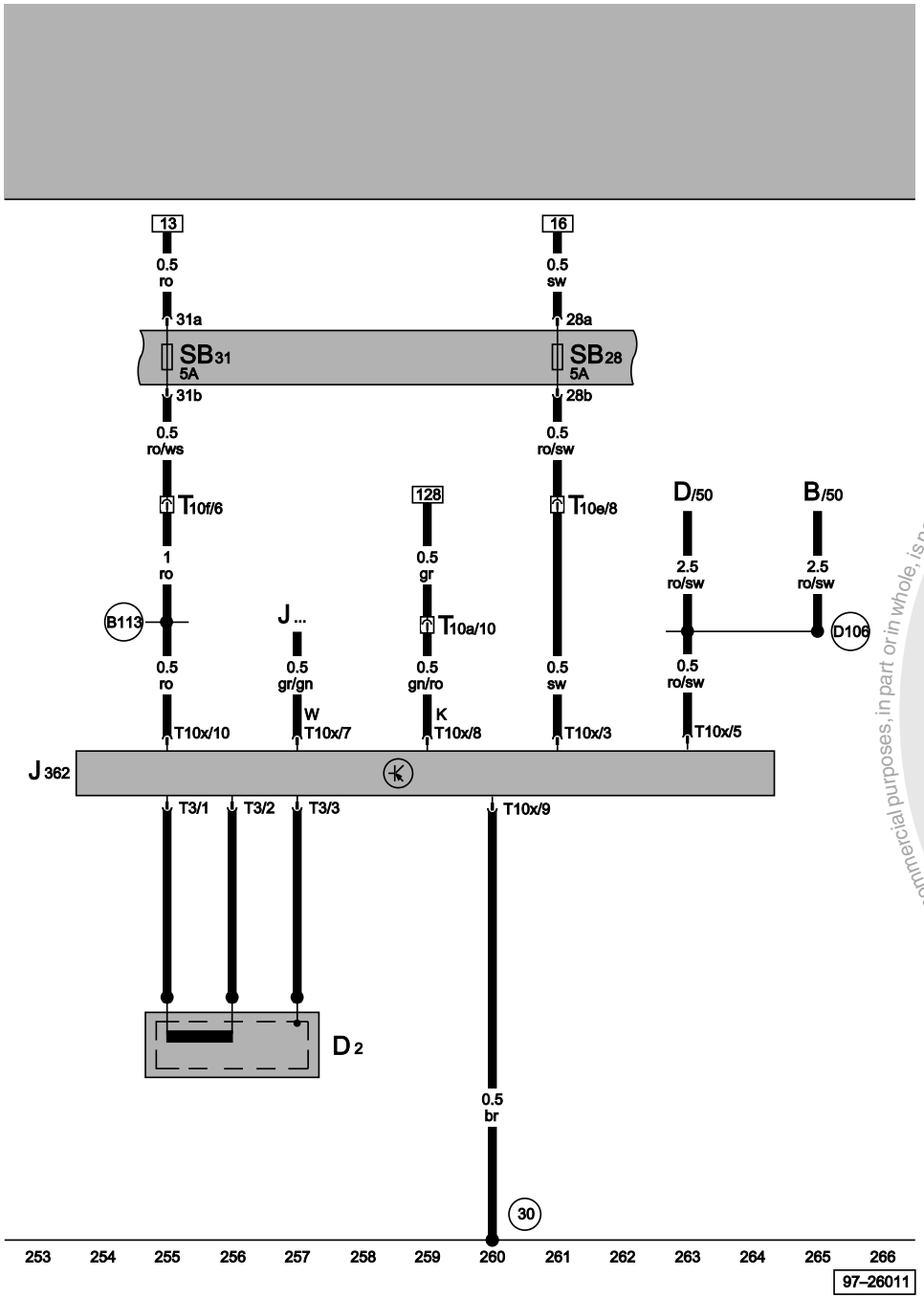

Immobilizer control unit, immobilizer reading coil

B	Starter
D	Ignition/starter switch
D2	Immobilizer reading coil
J...	Engine control units
J362	Immobilizer control unit
SB28	Fuse -28- on fuse box
SB31	Fuse -31- on fuse box
T3	3-pin connector, in immobilizer
T10a	10-pin connector, black, in protective housing for connectors
T10e	10-pin connector, green, in protective housing for connectors
T10f	10-pin connector, purple, in protective housing for connectors
T10x	10-pin connector
30	Earth point -1-, next to relay plate
B113	Positive (+) connection (30a), in left interior wiring harness
D106	Connection -4-, in engine compartment wiring harness

ws	=	white
sw	=	black
ro	=	red
br	=	brown
gn	=	green
bl	=	blue
gr	=	grey
li	=	purple
ge	=	yellow
or	=	orange
rs	=	pink

Protected by copyright. Copying for private or commercial purposes, in part or in whole, is not permitted unless authorised by Volkswagen AG. Volkswagen AG does not guarantee or accept any liability with respect to the correctness of information in this document. Copyright by Volkswagen AG.

satelettronica

1.4 l/74 kW Motronic, engine codes AQQ

From October 1999

For alternatives to relay and fuse positions as well as multi-pin connector wiring - see "Fitting locations" section.

Relay locations on relay plate:

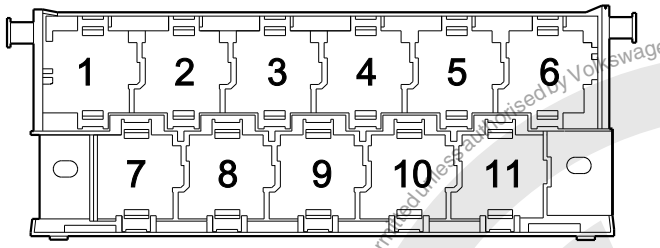

97-22850

2 - Fuel pump relay (167)
4 - Fuel shut-off control unit (405)
6 - X contact relief relay (100)

Note:

- *The number in brackets behind the part designation denotes the control number on the housing.*

Fuse colours

30 A - green
25 A - white
20 A - yellow
15 A - blue
10 A - red
7.5 A - brown
5 A - beige
3 A - purple

Protected by copyright. Copying for private or commercial purposes, in part or in whole, is not permitted unless authorised by Volkswagen AG. Volkswagen AG does not guarantee or accept any liability with respect to the correctness of information in this document. Copyright by Volkswagen AG.

satelettronica

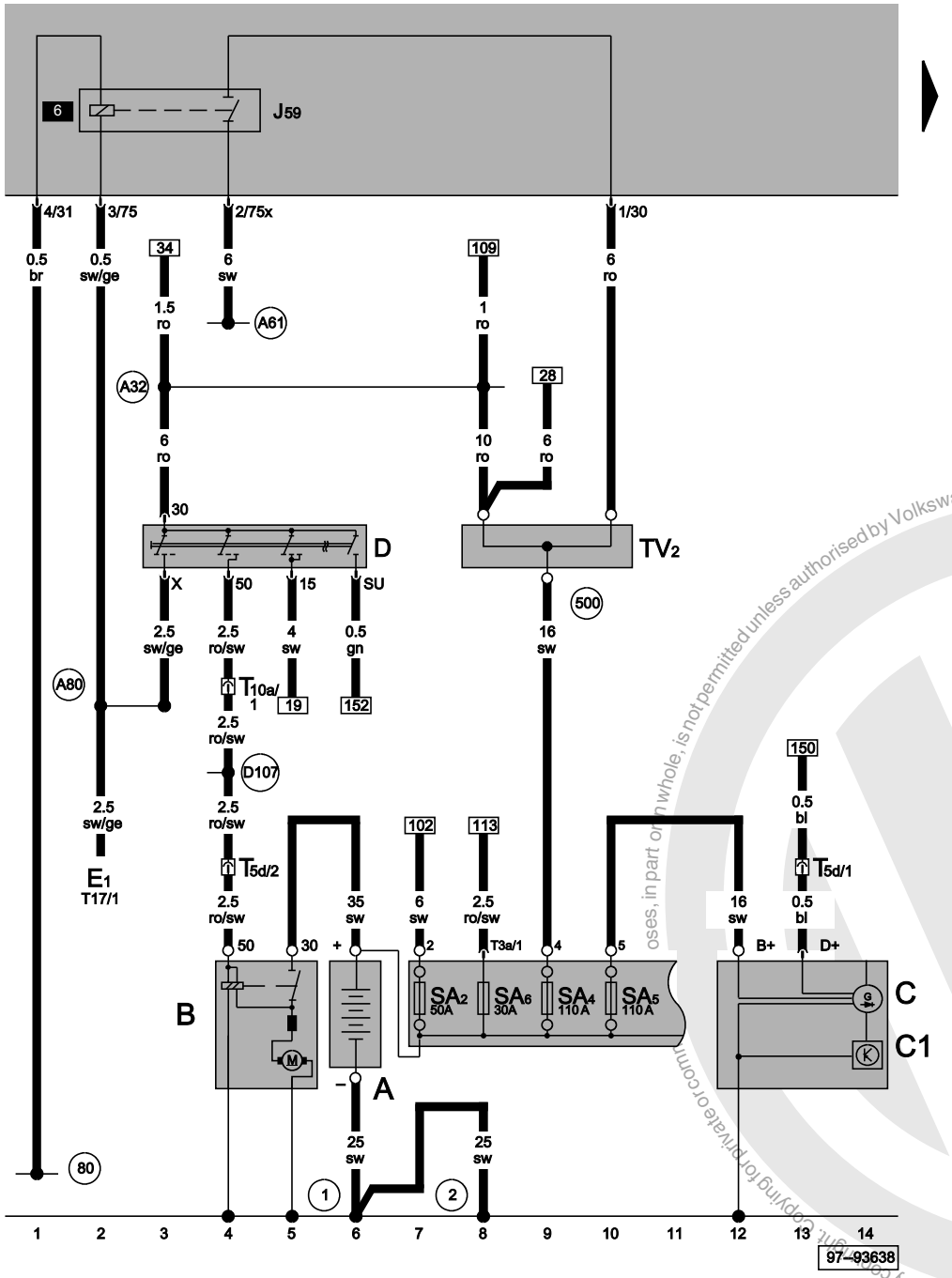

Starter, battery, alternator, voltage regulator, ignition/starter switch, terminal 30 junction box, X contact relief relay

A	Battery
B	Starter
C	Alternator
C1	Voltage regulator
D	Ignition/starter switch
E1	Lighting switch
J59	X contact relief relay
SA2	Fuse -2- on battery fuse box
SA4	Fuse -4- on battery fuse box
SA5	Fuse-5- on battery fuse box
SA6	Fuse -6- on battery fuse box
TV2	Terminal 30 junction box
T3a	3-pin connector, near battery
T5d	5-pin connector, near gearbox
T10a	10-pin connector, black
T17	17-pin connector
1	Earth strap, battery - body
2	Earth strap, gearbox - body
80	Earth connection -1-, in instruments wiring harness
500	Screw connection -1- (30), on relay plate
A32	Positive (+) connection (30), in dash panel wiring harness
A61	Positive (+) connection (X), in instruments wiring harness
A80	Connection -1- (X), in dash panel wiring harness
D107	Connection -5-, in engine compartment wiring harness

ws	=	white
sw	=	black
ro	=	red
br	=	brown
gn	=	green
bl	=	blue
gr	=	grey
li	=	purple
ge	=	yellow
or	=	orange
rs	=	pink

Protected by copyright. Copying for private or commercial purposes, in part or in whole, is not permitted unless authorised by Volkswagen AG. Volkswagen AG does not guarantee or accept any liability with respect to the correctness of information in this document. Copyright by Volkswagen AG.

satelettronica

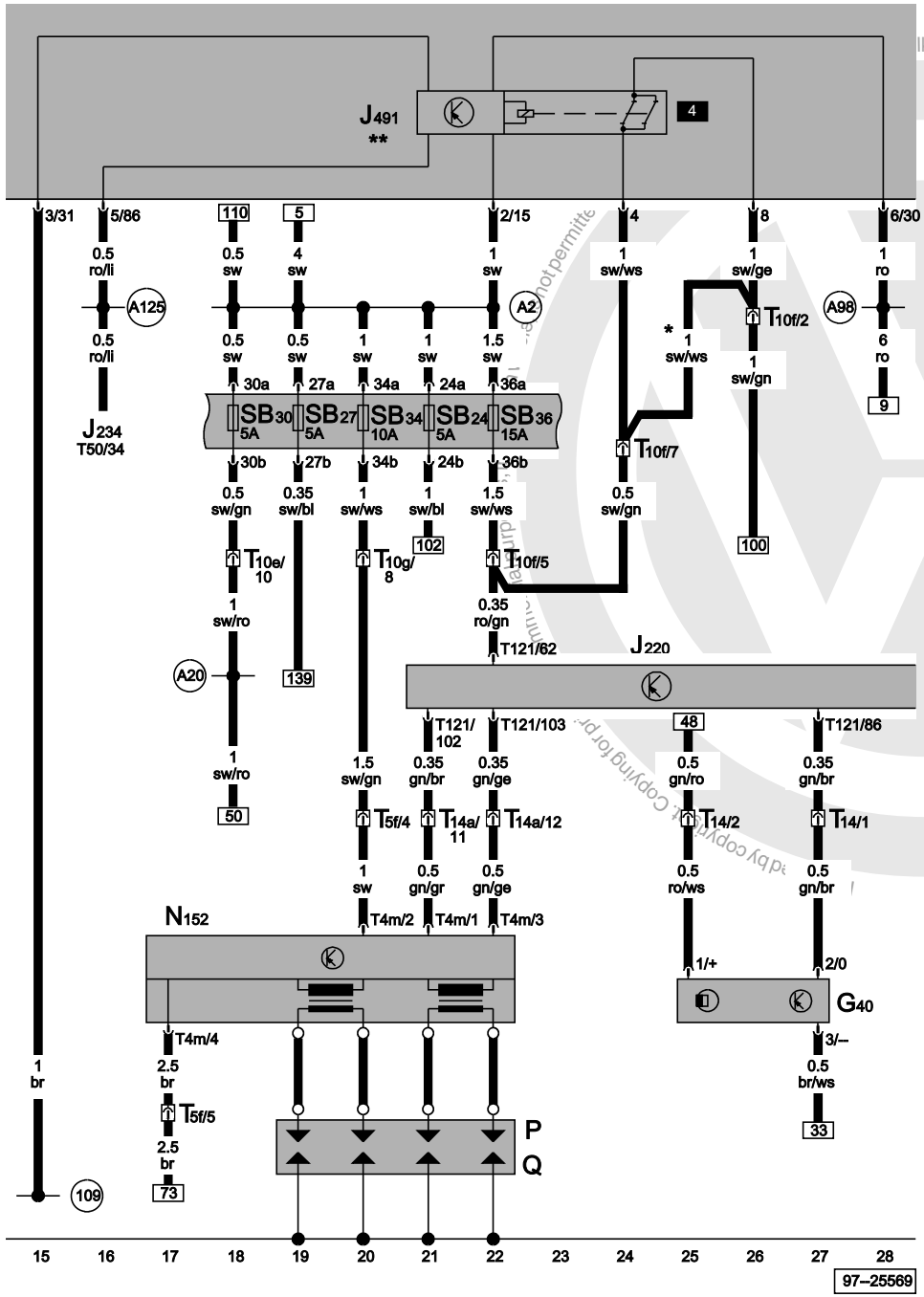

Motronic control unit, hall sender, ignition transformer, spark plug connector, spark plugs, fuel shut-off control unit (crash)

G40	Hall sender
J220	Motronic control unit
J234	Airbag control unit
J491	Fuel shut-off control unit (crash)
N152	Ignition transformer
P	Spark plug connector
Q	Spark plugs
SB24	Fuse -24- on fuse box
SB27	Fuse -27- on fuse box
SB30	Fuse -30- on fuse box
SB34	Fuse -34- on fuse box
SB36	Fuse -36- on fuse box
T4m	4-pin connector, yellow, in ignition transformer
T5f	5-pin connector, in engine
T10e	10-pin connector, green, in protective housing for connectors
T10f	10-pin connector, purple, in protective housing for connectors
T10g	10-pin connector, red, in protective housing for connectors
T14	14-pin connector, in engine
T50	50-pin connector
T121	121-pin connector
109	Earth connection, in airbag wiring harness
A2	Positive (+) connection (15), in dash panel wiring harness
A20	Connection (15a), in dash panel wiring harness
A98	Positive (+) connection -4- (30), in dash panel wiring harness
A125	Connection (crash signal), in dash panel wiring harness
*	Does not apply to airbag
**	Only models with airbag

ws	=	white
sw	=	black
ro	=	red
br	=	brown
gn	=	green
bl	=	blue
gr	=	grey
li	=	purple
ge	=	yellow
or	=	orange
rs	=	pink

Volkswagen AG does not guarantee or accept any liability with respect to the correctness of information in this document. Copyright by Volkswagen AG. Copying for private and commercial purposes is not permitted.
satelettronica

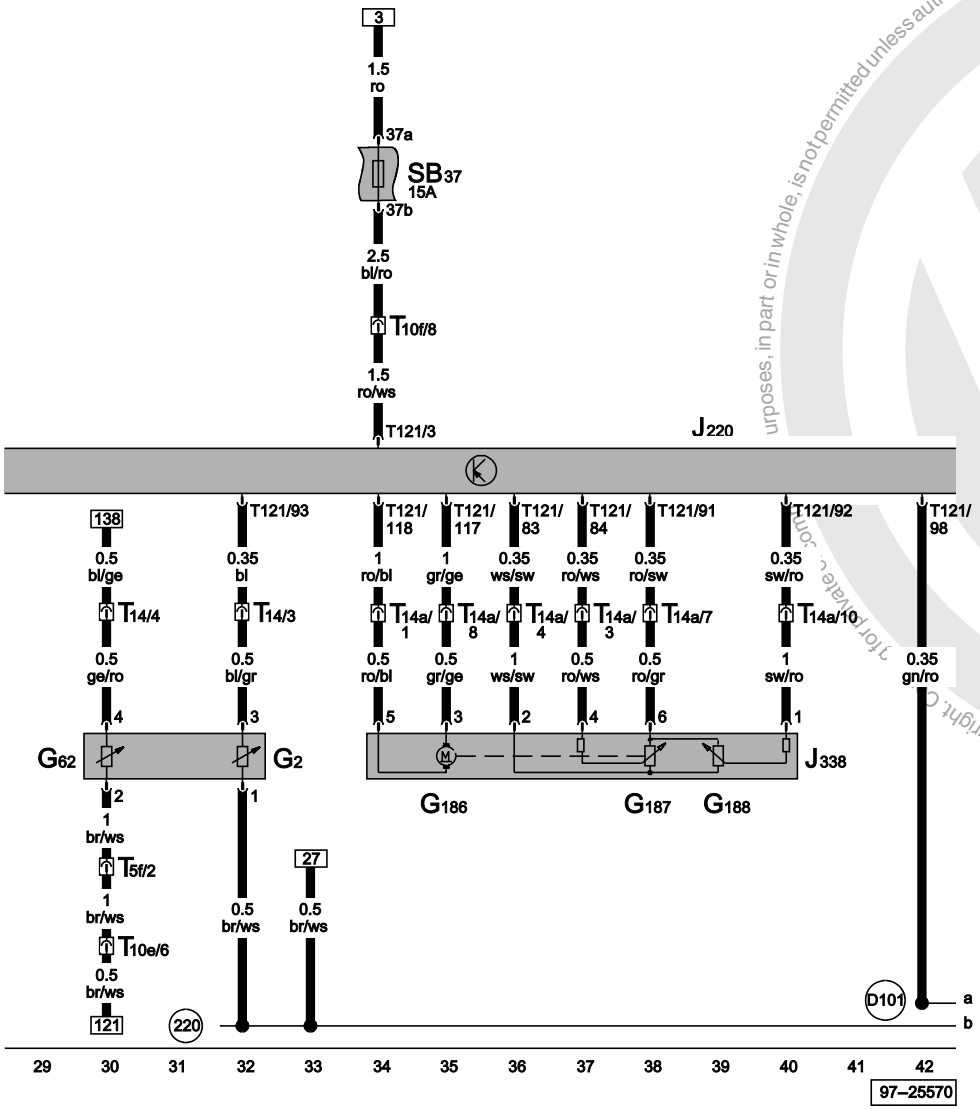

Motronic control unit, throttle valve control unit, coolant temperature sender, throttle valve drive (electric throttle operation)

G2	Coolant temperature sender
G62	Coolant temperature sender
G186	Throttle valve drive (electric throttle operation)
G187	Throttle valve drive angle sender -1- (electric throttle operation)
G188	Throttle valve drive angle sender -2- (electric throttle operation)
J220	Motronic control unit
J338	Throttle valve control unit
SB37	Fuse -37- on fuse box
T5f	5-pin connector, in engine
T10e	10-pin connector, green, in protective housing for connectors
T10f	10-pin connector, purple, in protective housing for connectors
T14	14-pin connector, in engine
T14a	14-pin connector, in engine
T121	121-pin connector
220	Earth connection (sender earth), in engine wiring harness
D101	Connection -1-, in engine compartment wiring harness

ws	=	white
sw	=	black
ro	=	red
br	=	brown
gn	=	green
bl	=	blue
gr	=	grey
li	=	purple
ge	=	yellow
or	=	orange
rs	=	pink

Protected by copyright. Copyright by Volkswagen AG. Volkswagen AG does not accept any liability with respect to the correctness of information in this document. Copyright by Volkswagen AG. Not for private or commercial purposes, in part or in whole, is not permitted unless authorised by Volkswagen AG.
satelettronica

Motronic control unit, intake air temperature sender, intake manifold pressure sender, exhaust gas recirculation frequency valve

G42	Intake air temperature sender
G71	Intake manifold pressure sender
J220	Motronic control unit
N121	Exhaust gas recirculation frequency valve
T14	14-pin connector, in engine
T121	121-pin connector
132	Earth connection -3-, in engine compartment wiring harness
220	Earth connection (sender earth), in engine wiring harness
D101	Connection -1-, in engine compartment wiring harness

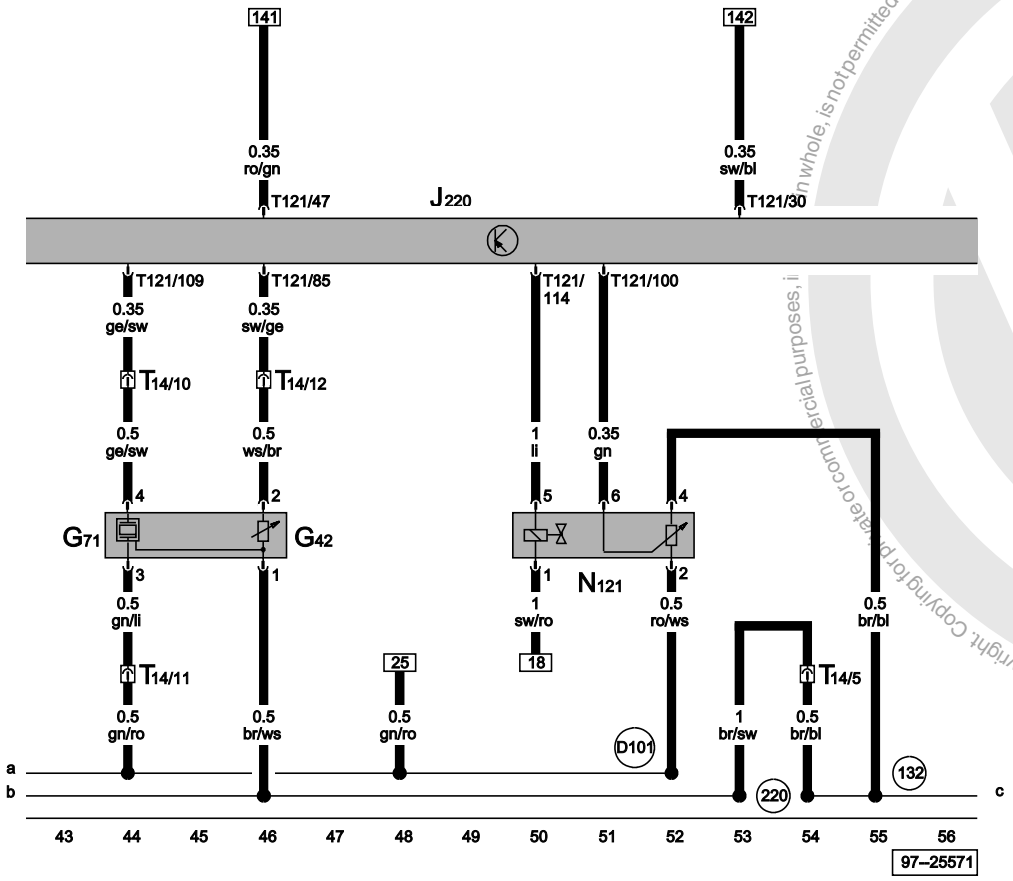

ws	=	white
sw	=	black
ro	=	red
br	=	brown
gn	=	green
bl	=	blue
gr	=	grey
li	=	purple
ge	=	yellow
or	=	orange
rs	=	pink

Protected by copyright. Copying for private or commercial purposes, in whole, is not permitted unless authorised by Volkswagen AG. Volkswagen AG does not guarantee or accept any liability with respect to the correctness of information in this document. Copyright by Volkswagen AG.

satelettronica

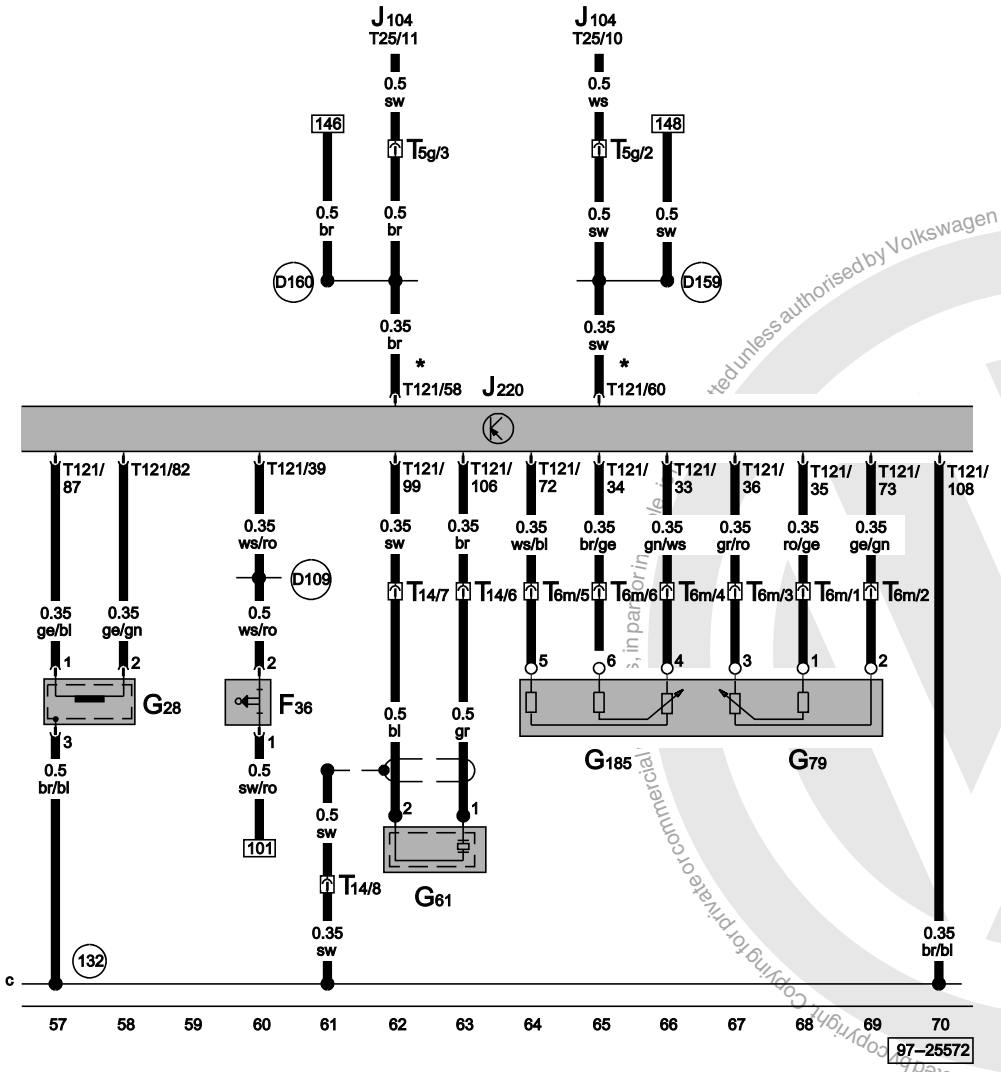

Motronic control unit, engine speed sender, knock sensor I, accelerator pedal position sender, clutch pedal switch

F36	Clutch pedal switch
G28	Engine speed sender
G61	Knock sensor I
G79	Accelerator pedal position sender
G185	Accelerator pedal position sender -2-
J104	ABS with EDL control unit
J220	Motronic control unit
T5g	5-pin connector, pink, in protective housing for connectors
T6m	6-pin connector
T14	14-pin connector, in engine
T25	25-pin connector
T121	121-pin connector
132	Earth connection -3-, in engine compartment wiring harness
D109	Connection -7-, in engine compartment wiring harness
D159	Positive (+) connection (high bus), in engine compartment wiring harness
D160	Positive (+) connection (low bus), in engine compartment wiring harness
*	Data wire

ws	=	white
sw	=	black
ro	=	red
br	=	brown
gn	=	green
bl	=	blue
gr	=	grey
li	=	purple
ge	=	yellow
or	=	orange
rs	=	pink

Protected by copyright. Copyright by Volkswagen AG. Volkswagen AG does not guarantee or accept any liability with respect to the correctness of information in this document. Copyright by Volkswagen AG. Not to be reproduced, in part or in whole, without permission. Protected by copyright. Copying for private or commercial purposes, in part or in whole, is not permitted unless authorised by Volkswagen AG. Volkswagen AG does not guarantee or accept any liability with respect to the correctness of information in this document. Copyright by Volkswagen AG.

satelettronica

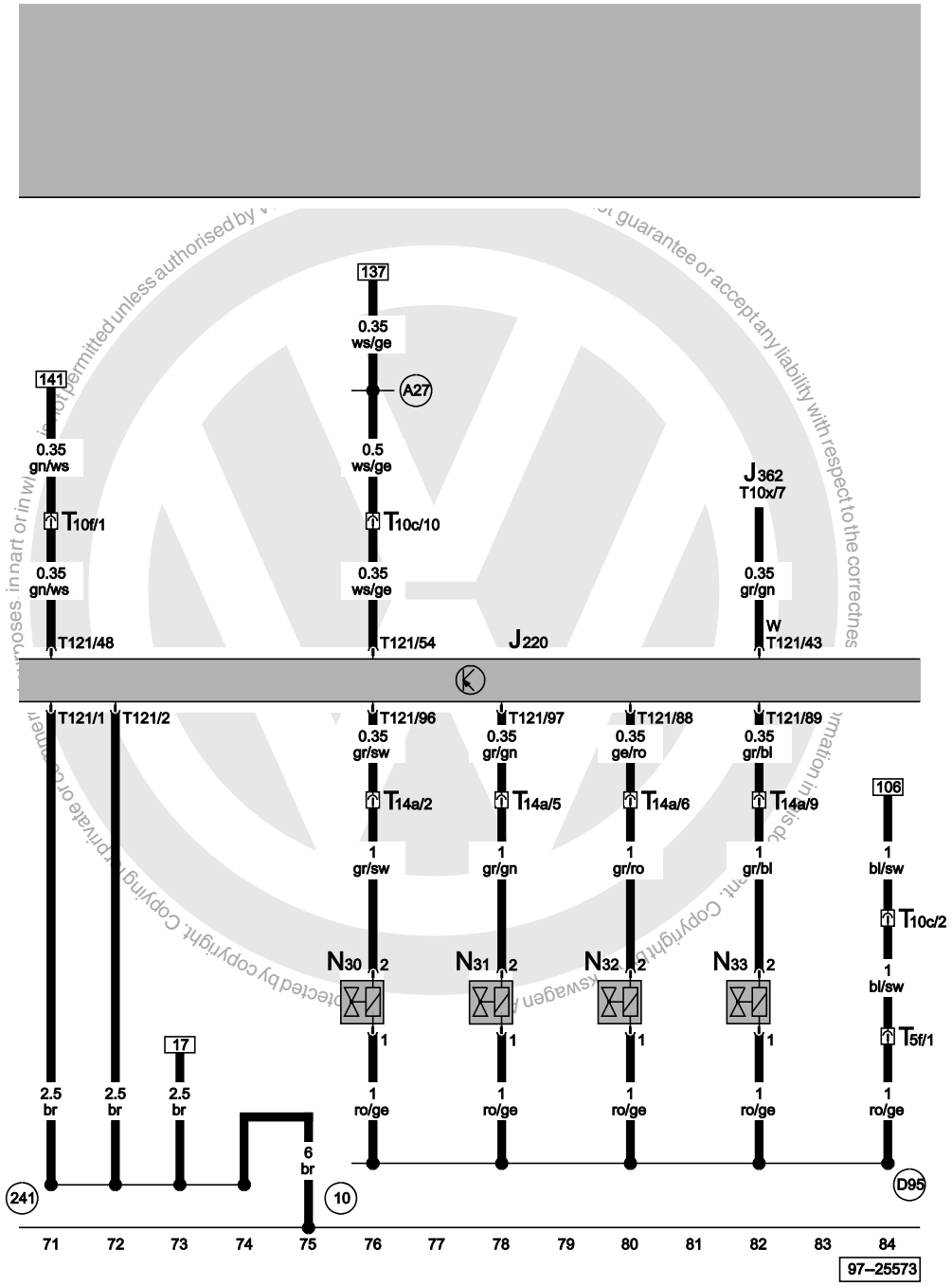

Motronic control unit, injectors

J220	Motronic control unit
J362	Immobilizer control unit
N30	Injector, cylinder 1
N31	Injector, cylinder 2
N32	Injector, cylinder 3
N33	Injector, cylinder 4
T5f	5-pin connector, in engine
T10c	10-pin connector, brown, in protective housing for connectors
T10f	10-pin connector, purple, in protective housing for connectors
T10x	10-pin connector
T14a	14-pin connector, in engine
T121	121-pin connector
10	Earth point, in plenum chamber
241	Earth connection -2-, engine earth, in engine wiring harness
A27	Connection (speed signal), in dash panel wiring harness
D95	Connection (injectors), in engine compartment wiring harness

ws	=	white
sw	=	black
ro	=	red
br	=	brown
gn	=	green
bl	=	blue
gr	=	grey
li	=	purple
ge	=	yellow
or	=	orange
rs	=	pink

satelettronica

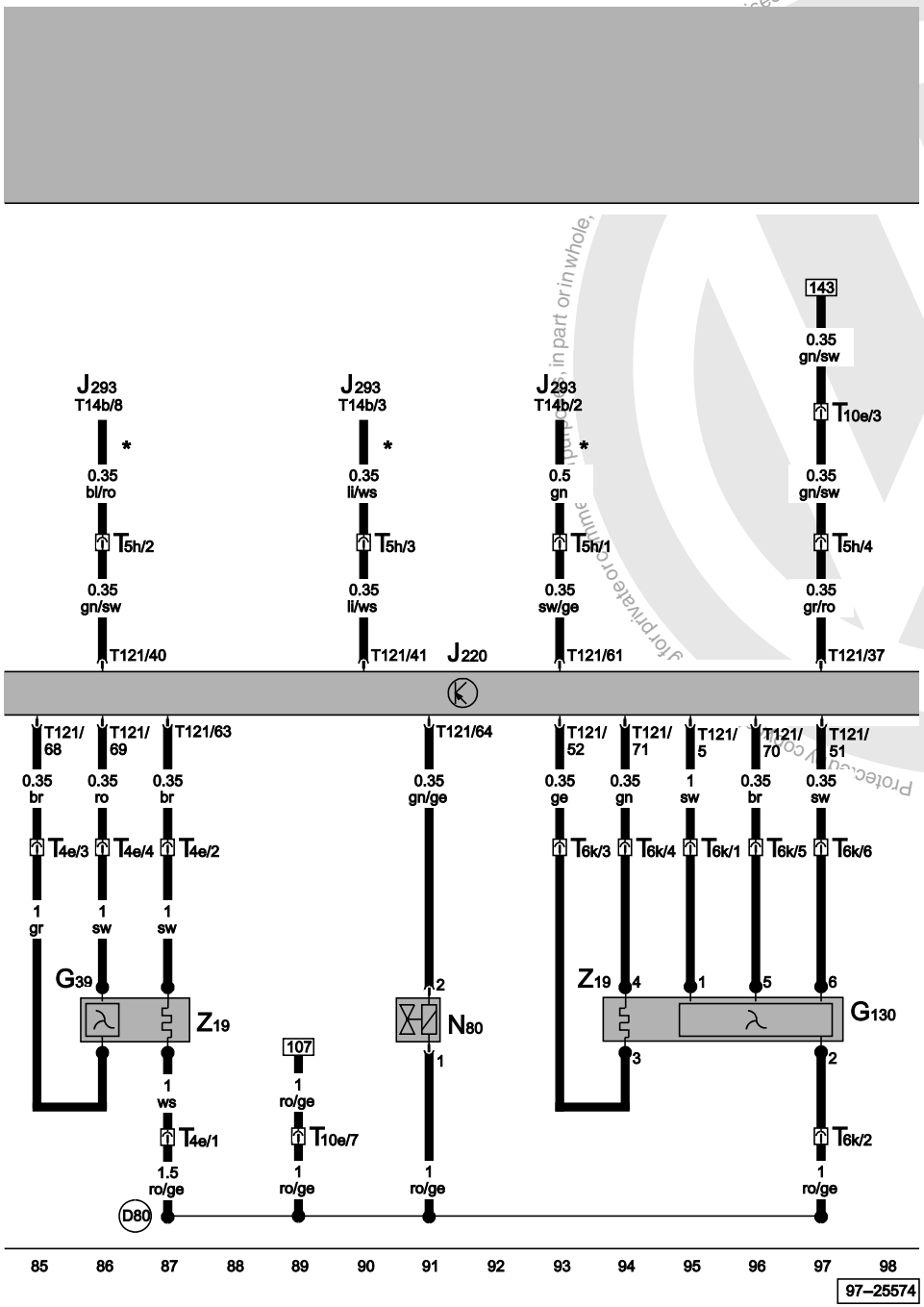

Motronic control unit, lambda probe, lambda probe downstream of catalytic converter, lambda probe heater, activated charcoal filter system solenoid valve 1 (pulsed)

G39	Lambda probe
G130	Lambda probe downstream of catalytic converter
J220	Motronic control unit
J293	Radiator fan control unit
N80	Activated charcoal filter system solenoid valve 1 (pulsed)
T4e	4-pin connector, in engine
T5h	5-pin connector, brown, in protective housing for connectors
T6k	6-pin connector, in exhaust pipe
T10e	10-pin connector, green, in protective housing for connectors
T14b	14-pin connector, in engine compartment, left
T121	121-pin connector
Z19	Lambda probe heater
D80	Positive (+) connection (87a - for active. charcoal filter system solenoid), in engine compartment wiring harness
*	Only models with air conditioner

ws	=	white
sw	=	black
ro	=	red
br	=	brown
gn	=	green
bl	=	blue
gr	=	grey
li	=	purple
ge	=	yellow
or	=	orange
rs	=	pink

Protected by Volkswagen AG. Volkswagen AG does not guarantee availability of this document. Copyright by Volkswagen AG.
for private or commercial use, in part or in whole, is not permitted without prior consent.
satelettronica

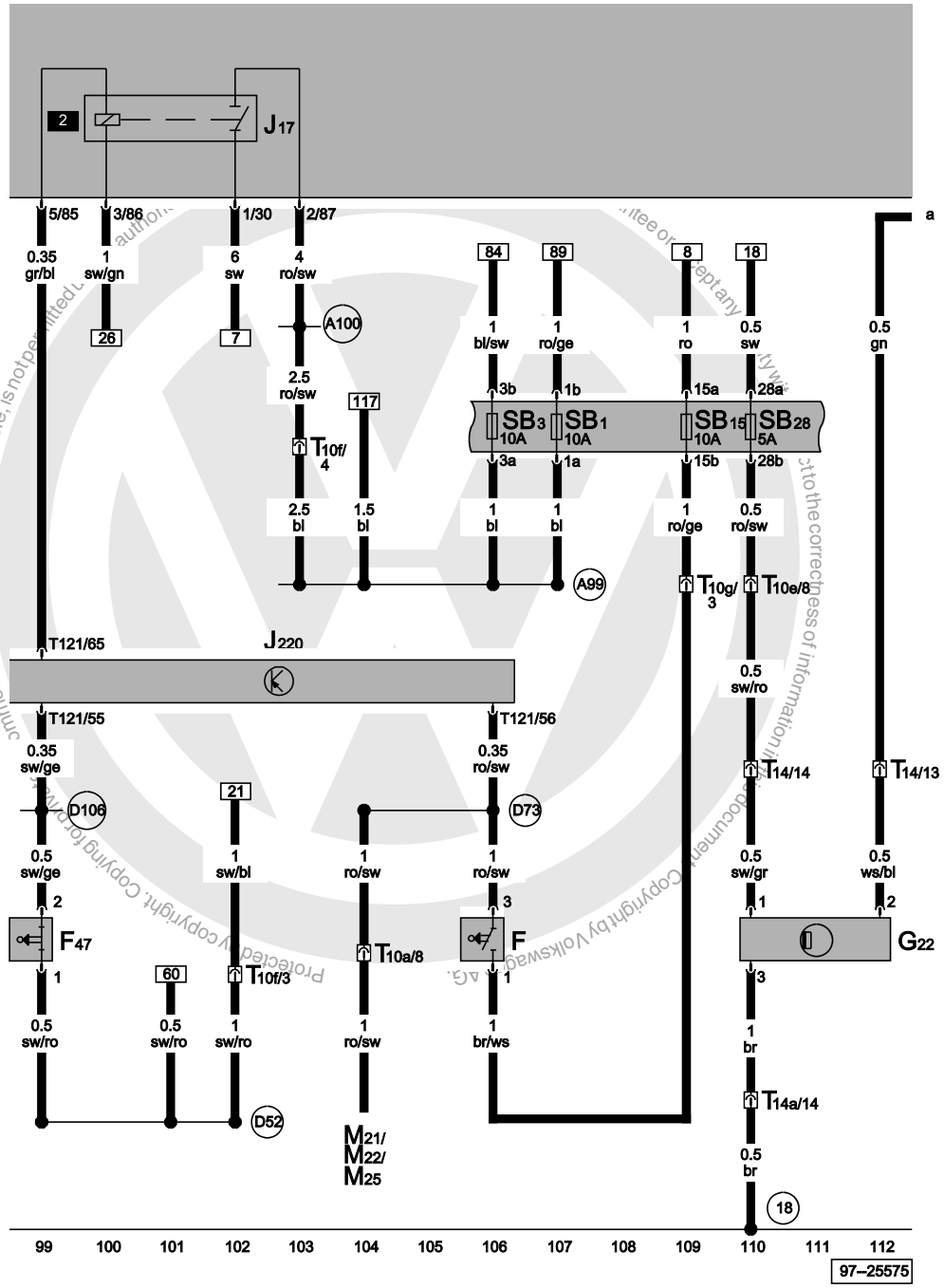

Motronic control unit, speedometer sender (hall sender, on gearbox), brake light switch, cruise control system brake pedal switch (diesel direct injection system), fuel pump relay

F	Brake light switch
F47	Cruise control system brake pedal switch (diesel direct injection system)
G22	Speedometer sender (Hall sender, on gearbox)
J17	Fuel pump relay
J220	Motronic control unit
M21	Brake and tail light bulb, left
M22	Brake and tail light bulb, right
M25	High level brake light bulb
SB1	Fuse -1- on fuse box
SB3	Fuse -3- on fuse box
SB15	Fuse -15- on fuse box
SB28	Fuse -28- on fuse box
T10a	10-pin connector, black, in protective housing for connectors
T10e	10-pin connector, green, in protective housing for connectors
T121	121-pin connector
T10f	10-pin connector, purple, in protective housing for connectors
T10g	10-pin connector, red, in protective housing for connectors
T14	14-pin connector, in engine
T14a	14-pin connector, in engine
18	Earth point, on engine block
A99	Connection -1- (87), in dash panel wiring harness
A100	Connection -2- (87), in dash panel wiring harness
D52	Positive (+) connection (15a), in engine compartment wiring harness
D73	Positive (+) connection (54), in engine compartment wiring harness
D106	Connection -4-, in engine compartment wiring harness

ws	=	white
sw	=	black
ro	=	red
br	=	brown
gn	=	green
bl	=	blue
gr	=	grey
li = purple
ge = yellow
or = orange
rs = pink

satelettronica

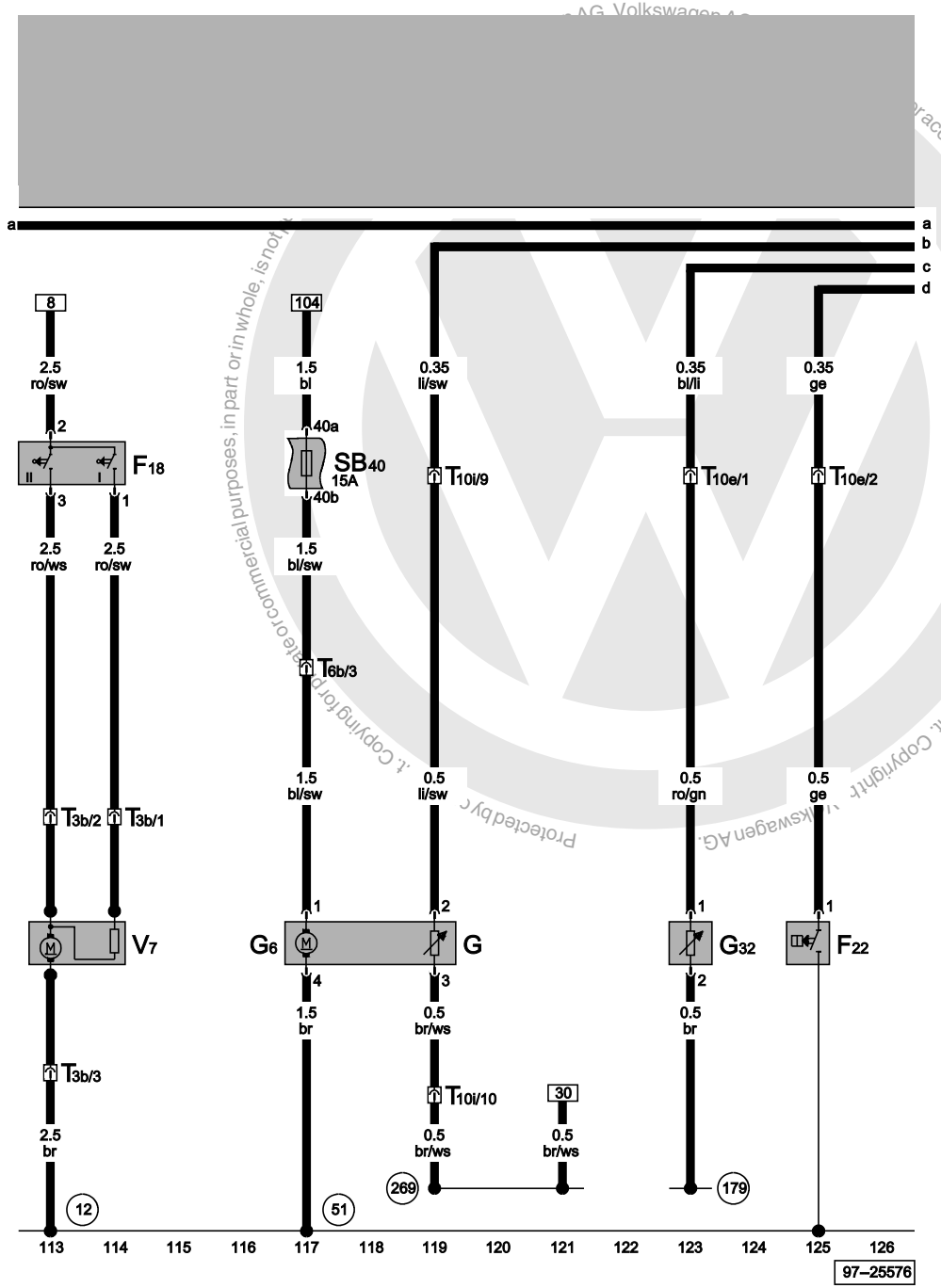

Radiator fan thermo-switch, oil pressure switch (0.3 bar), fuel gauge sender, fuel pump (pre-supply pump)

F18	Radiator fan thermo-switch
F22	Oil pressure switch (0.3 bar)
G	Fuel gauge sender
G6	Fuel pump (pre-supply pump)
G32	Coolant shortage indicator sender
SB40	Fuse -40- on fuse box
T3b	3-pin connector, in engine compartment, front left
T6b	6-pin connector, grey, in protective housing for connectors
T10e	10-pin connector, green, in protective housing for connectors
T10i	10-pin connector, orange, in protective housing for connectors
V7	Radiator fan
12	Earth point, in engine compartment, left
51	Earth point, in right luggage compartment
179	Earth connection, in left headlight wiring harness
269	Earth connection (sender earth) -1-, in dash panel wiring harness

ws	=	white
sw	=	black
ro	=	red
br	=	brown
gn	=	green
bl	=	blue
gr	=	grey
li	=	purple
ge	=	yellow
or	=	orange
rs	=	pink

satelettronica

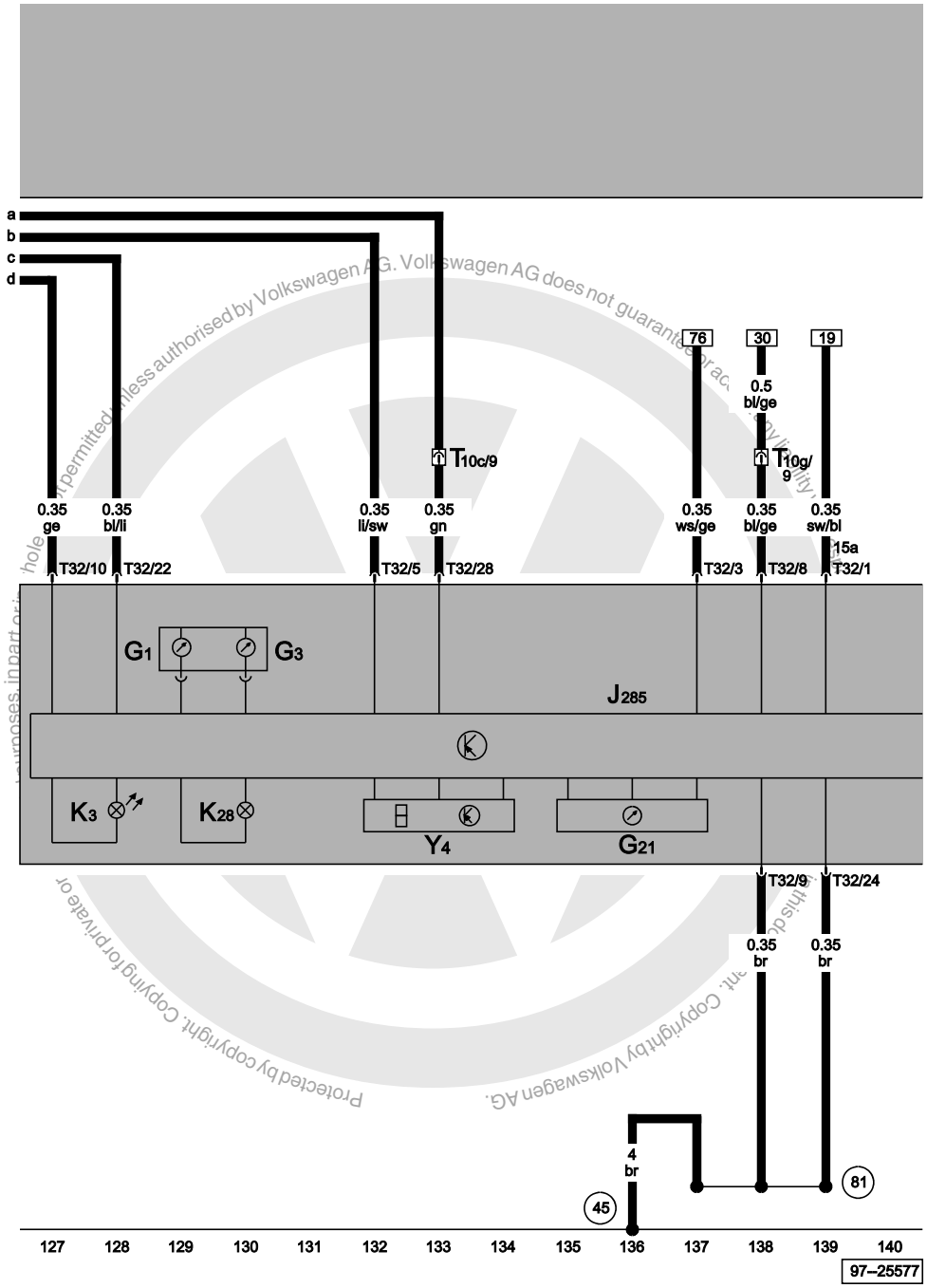

Control unit with display in dash panel insert, fuel gauge, coolant temperature gauge, speedometer, oil pressure warning lamp

G1	Fuel gauge
G3	Coolant temperature gauge
G21	Speedometer
J285	Control unit with display in dash panel insert
K3	Oil pressure warning lamp
K28	Coolant temperature/coolant shortage warning lamp
T10c	10-pin connector, brown, in protective housing for connectors
T10g	10-pin connector, red, in protective housing for connectors
T32	32-pin connector, blue
Y4	Odometer display
45	Earth point, behind dash panel - centre
81	Earth connection -1-, in dash panel wiring harness

ws	=	white
sw	=	black
ro	=	red
br	=	brown
gn	=	green
bl	=	blue
gr	=	grey
li	=	purple
ge	=	yellow
or	=	orange
rs	=	pink

Protected by copyright. Copying for private or commercial purposes, in part or in whole, is not permitted unless authorised by Volkswagen AG. Volkswagen AG does not guarantee or accept any liability with respect to the correctness of information in this document. Copyright by Volkswagen AG.

satelettronica

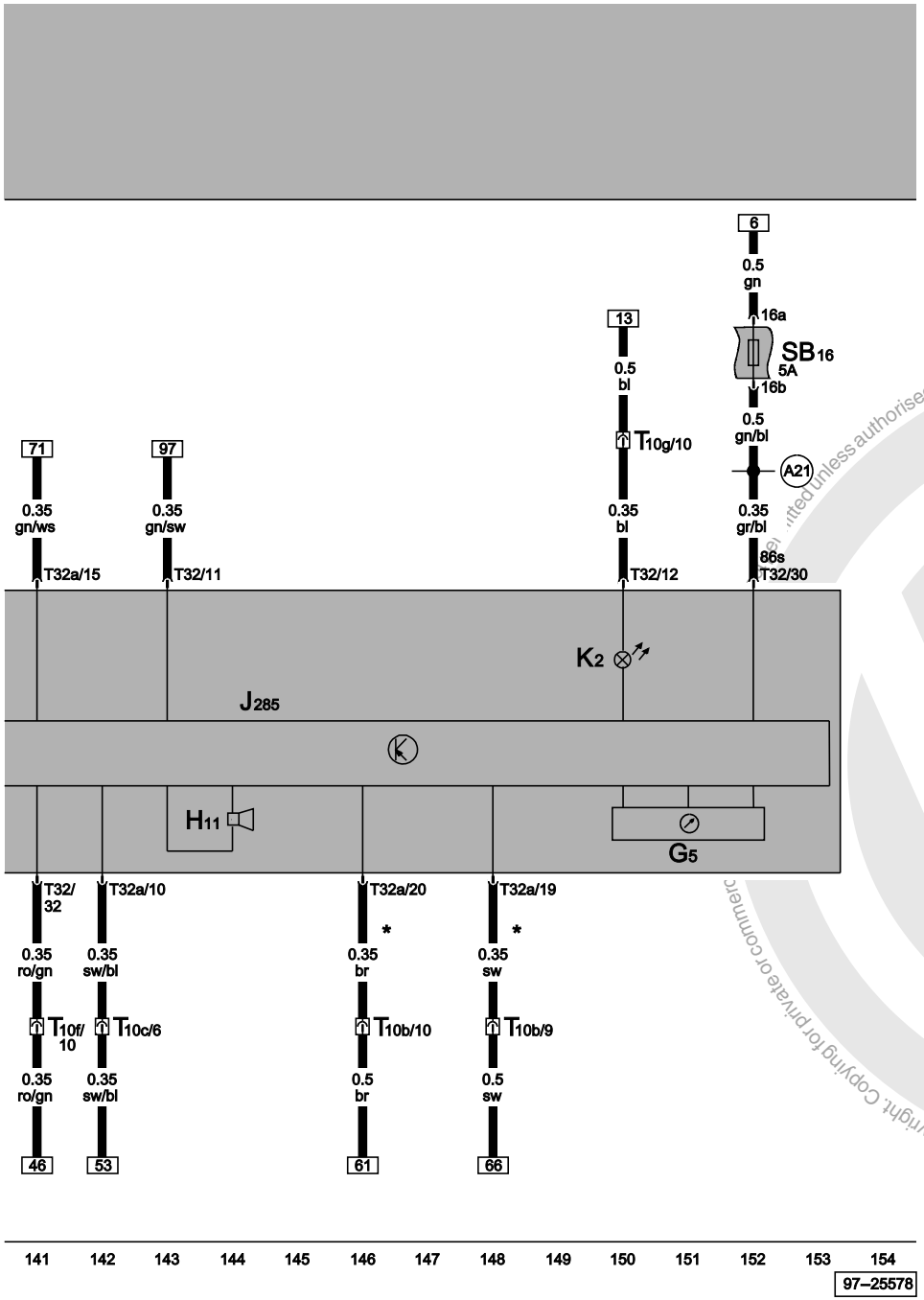

Control unit with display in dash panel insert, rev. counter, oil pressure warning buzzer, alternator warning lamp

G5	Rev. counter
H11	Oil pressure warning buzzer
J285	Control unit with display in dash panel insert
K2	Alternator warning lamp
SB16	Fuse -16- on fuse box
T10b	10-pin connector, white, in protective housing for connectors
T10c	10-pin connector, brown, in protective housing for connectors
T10f	10-pin connector, purple, in protective housing for connectors
T10g	10-pin connector, red, in protective housing for connectors
T32	32-pin connector, blue
T32a	32-pin connector, green
A21	Connection (86s), in dash panel wiring harness
*	Data wire

ws	=	white
sw	=	black
ro	=	red
br	=	brown
gn	=	green
bl	=	blue
gr	=	grey
li	=	purple
ge	=	yellow
or	=	orange
rs	=	pink

Reproduced by copyright. Copying for private or commercial purposes is not permitted unless authorised by Volkswagen AG. Volkswagen AG does not guarantee or accept any liability with respect to the correctness of information in this document. Copyright by Volkswagen AG.

satelettronica

1.9 l/50 kW naturally aspirated diesel engine, engine codes AGP/AQM

From October 1999

1.9 l/50 kW naturally aspirated diesel engine, engine codes AQM, from October 1999

For alternatives to relay and fuse positions as well as multi-pin connector wiring - see "Fitting locations" section.

Relay locations on relay plate:

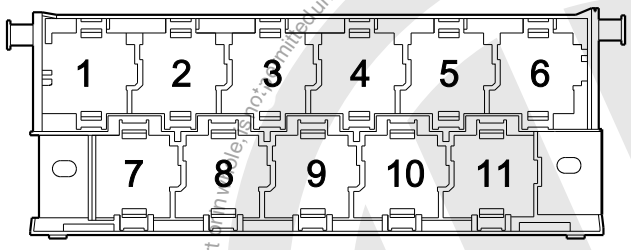

97--25507

2 - Glow plug relay (103)
4 - Fuel shut- off control unit (405)
6 - X contact relief relay (100)
7 - Terminal 30 voltage supply relay, only engine compartment SDI/TDI (109)

Note:

- *The number in brackets behind the part designation denotes the control number on the housing.*

Fuse colours

30 A - green
25 A - white
20 A - yellow
15 A - blue
10 A - red
7.5 A - brown
5 A - beige
3 A - purple

Protected by copyright. Copying for private or commercial purposes, in part or in whole, is not permitted unless authorised by Volkswagen AG. Volkswagen AG does not guarantee or accept any liability with respect to the correctness of information in this document. Copyright by Volkswagen AG.

satelettronica

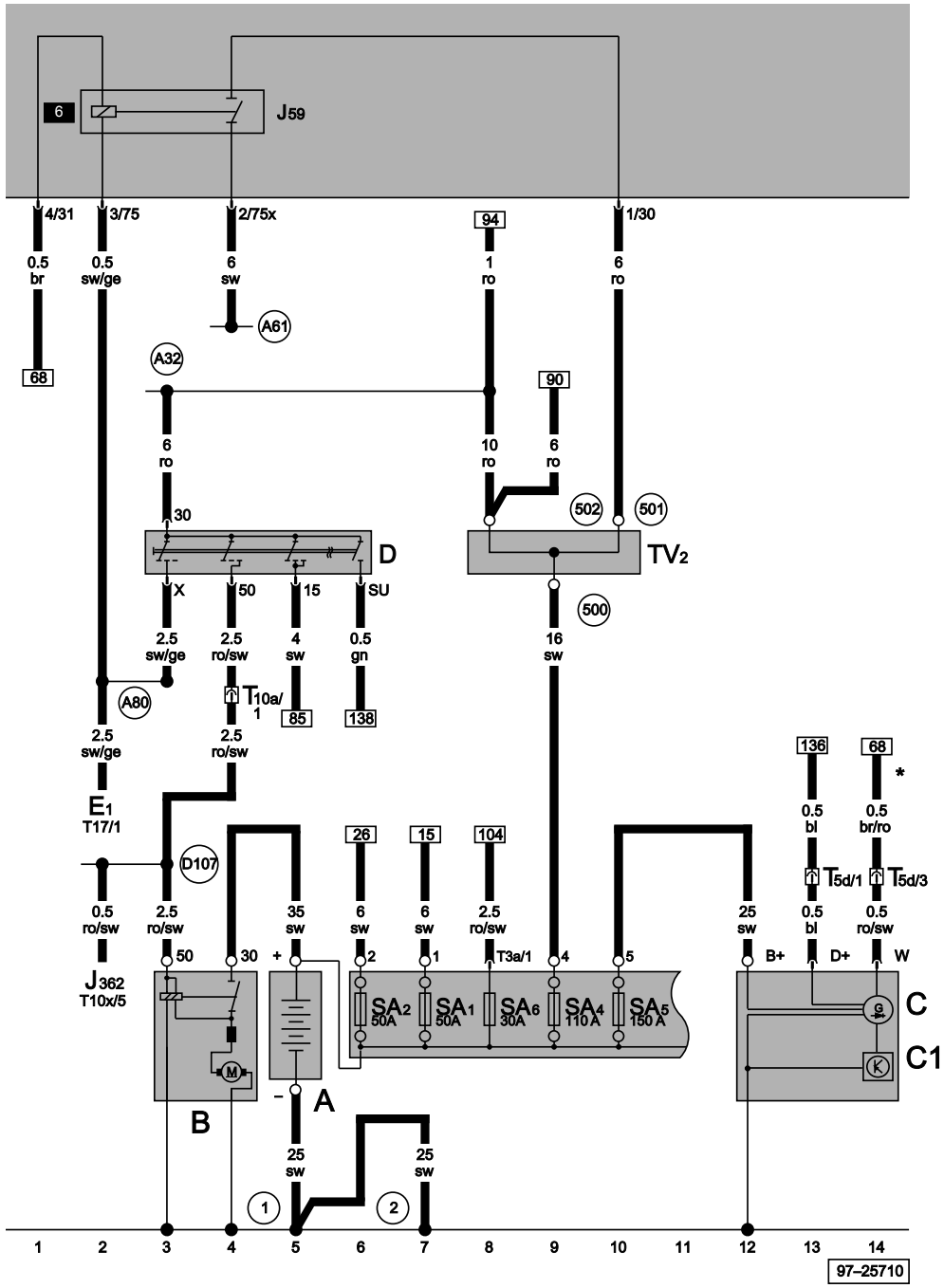

Battery, starter, alternator, voltage regulator, ignition/starter switch, terminal 30 junction box , X contact relief relay

A	Battery
B	Starter
C	Alternator
C1	Voltage regulator
D	Ignition/starter switch
E1	Lighting switch
J59	X contact relief relay
J362	Immobilizer control unit
SA1	Fuse -1- on battery fuse box
SA2	Fuse -2- on battery fuse box
SA4	Fuse -4- on battery fuse box
SA5	Fuse -5- on battery fuse box
SA6	Fuse -6- on battery fuse box
TV2	Terminal 30 junction box
T3a	3-pin connector, in battery
T5d	5-pin connector, in engine, near gearbox
T10a	10-pin connector, black, in protective housing for connectors
T10x	10-pin connector
T17	17-pin connector
1	Earth strap, battery - body
2	Earth strap, gearbox - body
500	Screw connection -1- (30), on relay plate
501	Screw connection -2- (30), on relay plate
502	Screw connection -1- (30a), on relay plate
A32	Positive (+) connection (30), in dash panel wiring harness
A61	Positive (+) connection (X), in instruments wiring harness
A80	Connection -1- (X), in dash panel wiring harness
D107	Connection -5-, in engine compartment wiring harness
*	Only models with auxiliary heating

ws	=	white
sw	=	black
ro	=	red
br	=	brown
gn	=	green
bl	=	blue
gr	=	grey
li	=	purple
ge	=	yellow
or	=	orange
rs	=	pink

Protected by copyright. Copying for private or commercial purposes, in part or in whole, is not permitted unless authorised by Volkswagen AG. Volkswagen AG does not give any guarantee or accept any liability with respect to the correctness of information in this document. Copyright by Volkswagen AG.
satelettronica

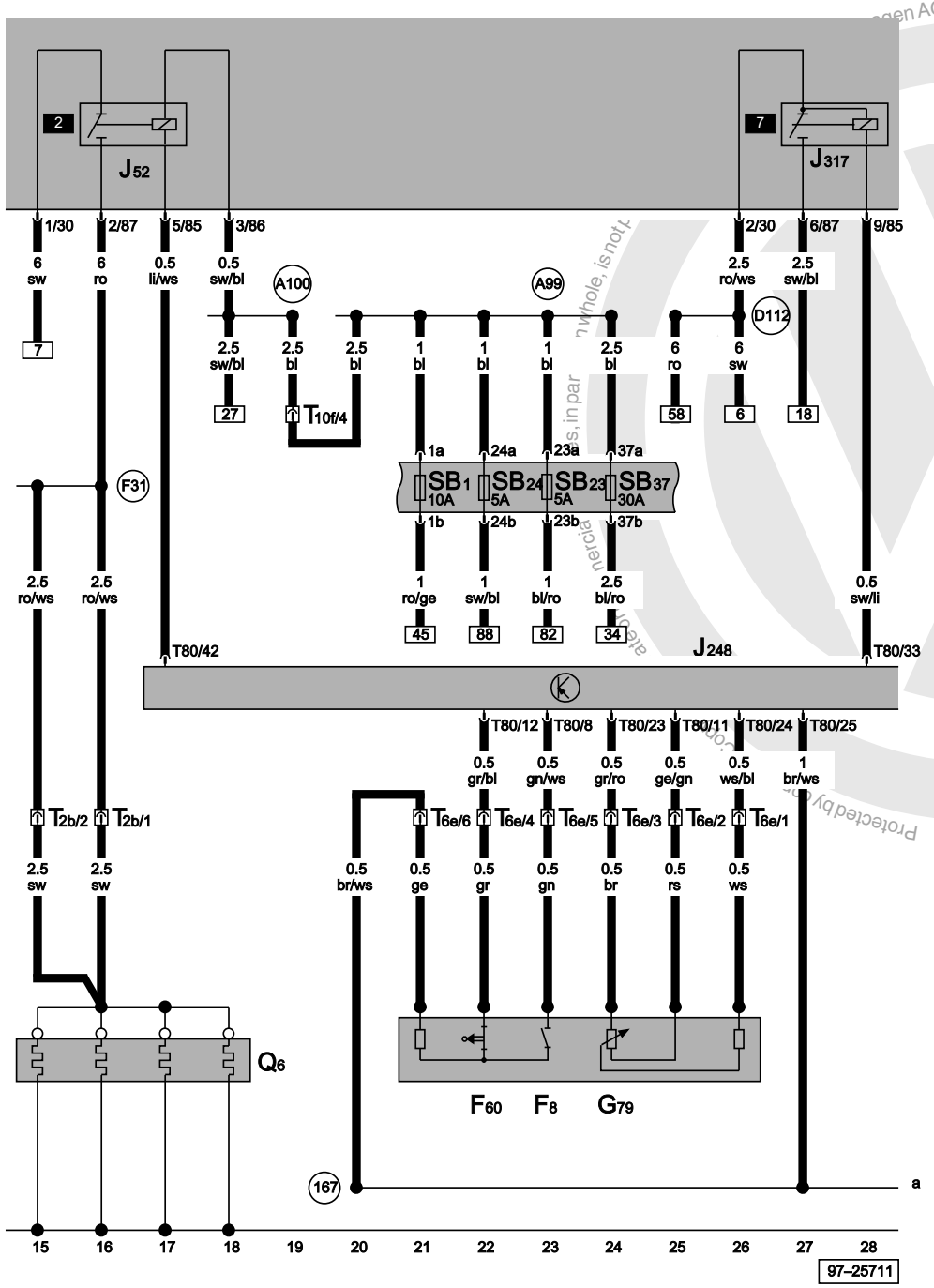

Diesel direct injection system control unit, relay for glow plugs, glow plugs (engine), terminal 30 voltage supply relay, kick-down switch, idling switch, accelerator pedal position sender

F8	Kick-down switch
F60	Idling switch
G79	Accelerator pedal position sender
J52	Glow plug relay
J248	Diesel direct injection system control unit
J317	Terminal 30 voltage supply relay
Q6	Glow plugs - (engine)
SB1	Fuse -1- on fuse box
SB23	Fuse -23- on fuse box
SB24	Fuse -24- on fuse box
SB37	Fuse -37- on fuse box
T2b	2-pin connector, in engine
T6e	6-pin connector, on left C-pillar
T10f	10-pin connector, purple, in protective housing for connectors
T80	80-pin connector
167	Earth connection -4-, in engine compartment wiring harness
A99	Connection -1- (87), in dash panel wiring harness
A100	Connection -2- (87), in dash panel wiring harness
D112	Connection -10-, in engine compartment wiring harness
F31	Connection (glow plugs - engine), in diesel direct injection system wiring harness

ws	=	white
sw	=	black
ro	=	red
br	=	brown
gn	=	green
bl	=	blue
gr	=	grey
li	=	purple
ge	=	yellow
or	=	orange
rs	=	pink

satelettronica

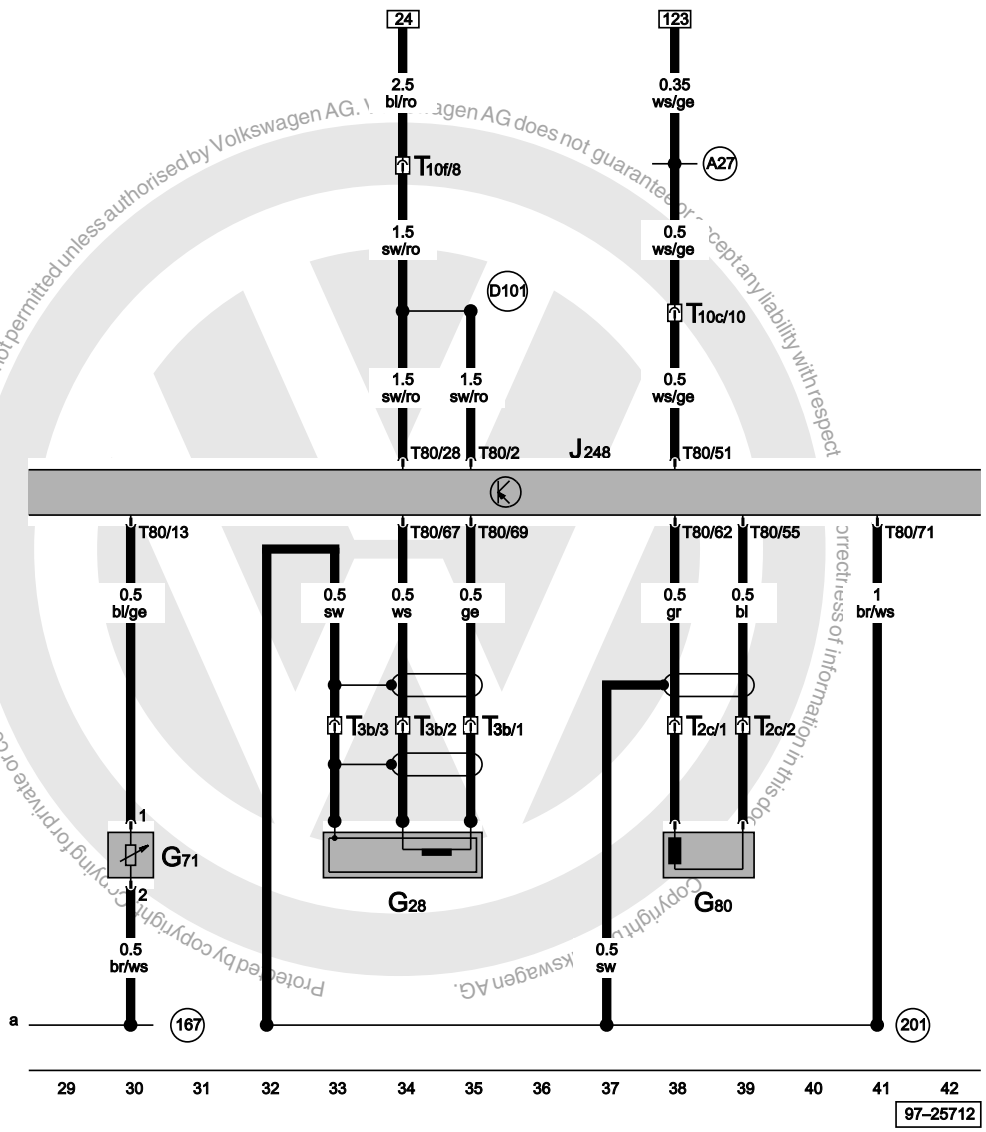

Diesel direct injection system control unit, engine speed sender, intake manifold pressure sender, needle lift sender

G28	Engine speed sender
G71	Intake manifold pressure sender
G80	Needle lift sender
J248	Diesel direct injection system control unit
T2c	2-pin connector
T3b	3-pin connector, in engine compartment, front left
T10c	10-pin connector, brown, in protective housing for connectors
T10f	10-pin connector, purple, in protective housing for connectors
T80	80-pin connector
167	Earth connection -4-, in engine compartment wiring harness
201	Earth connection -5-, in engine compartment wiring harness
A27	Connection (speed signal), in dash panel wiring harness
D101	Connection -1-, in engine compartment wiring harness

ws	=	white
sw	=	black
ro	=	red
br	=	brown
gn	=	green
bl	=	blue
gr	=	grey
li	=	purple
ge	=	yellow
or	=	orange
rs	=	pink

Protected by copyright. Copying for private or commercial purposes, in part or in whole, is not permitted unless authorised by Volkswagen AG. Volkswagen AG does not guarantee or accept any liability with respect to the correctness of information in this document. Copyright by Volkswagen AG.

satelettronica

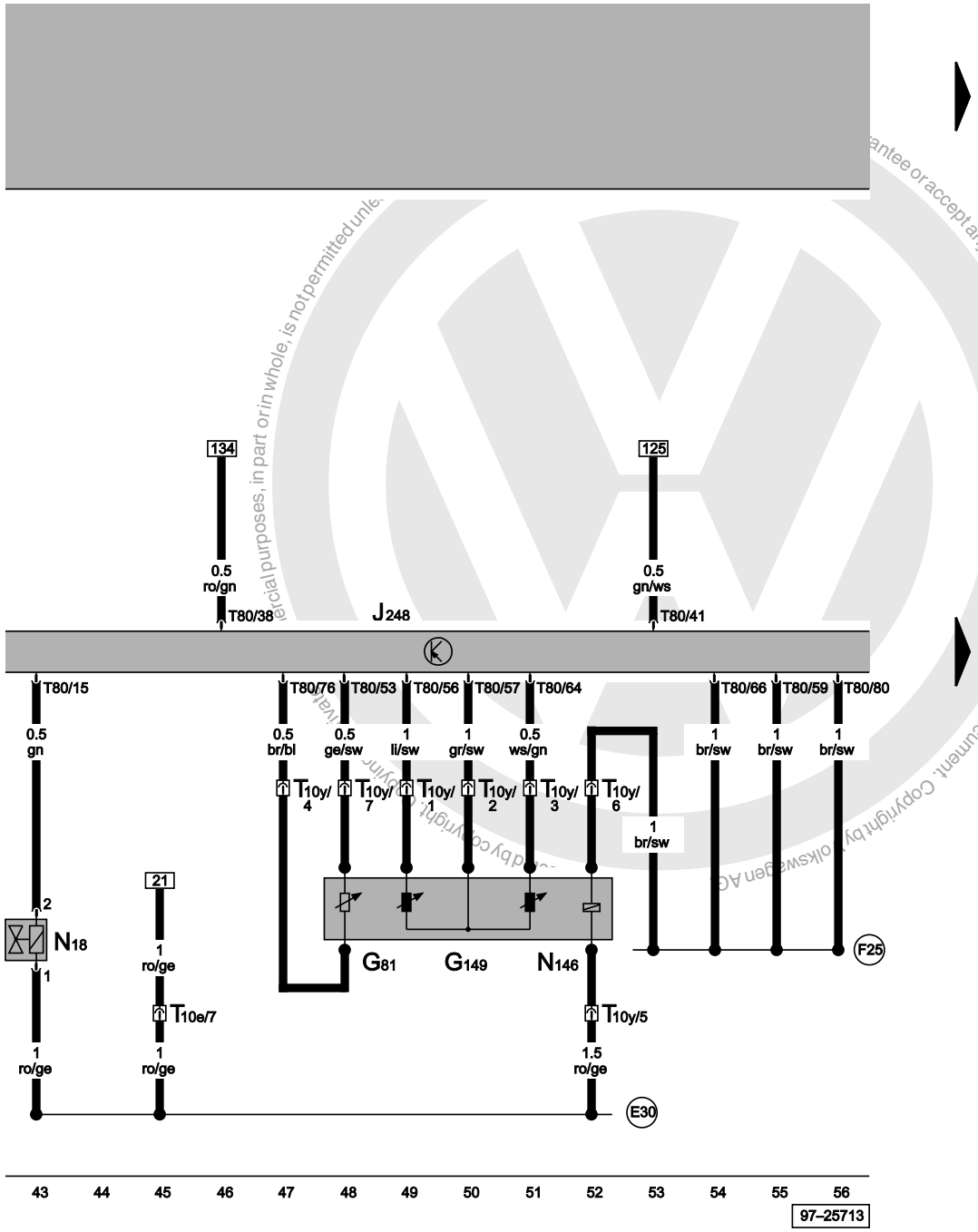

Diesel direct injection system control unit, exhaust gas recirculation valve, fuel temperature sender, modulating piston movement sender, metering adjuster

G81	Fuel temperature sender
G149	Modulating piston movement sender
J248	Diesel direct injection system control unit
N18	Exhaust gas recirculation valve
N146	Metering adjuster
T10e	10-pin connector, green, in protective housing for connectors
T10y	10-pin connector, blue, A pillar, left
T80	80-pin connector
E30	Connection (87a), in engine wiring harness
F25	Connection -1-, in diesel direct injection system wiring harness

ws	=	white
sw	=	black
ro	=	red
br	=	brown
gn	=	green
bl	=	blue
gr	=	grey
li	=	purple
ge	=	yellow
or	=	orange
rs	=	pink

satelettronica

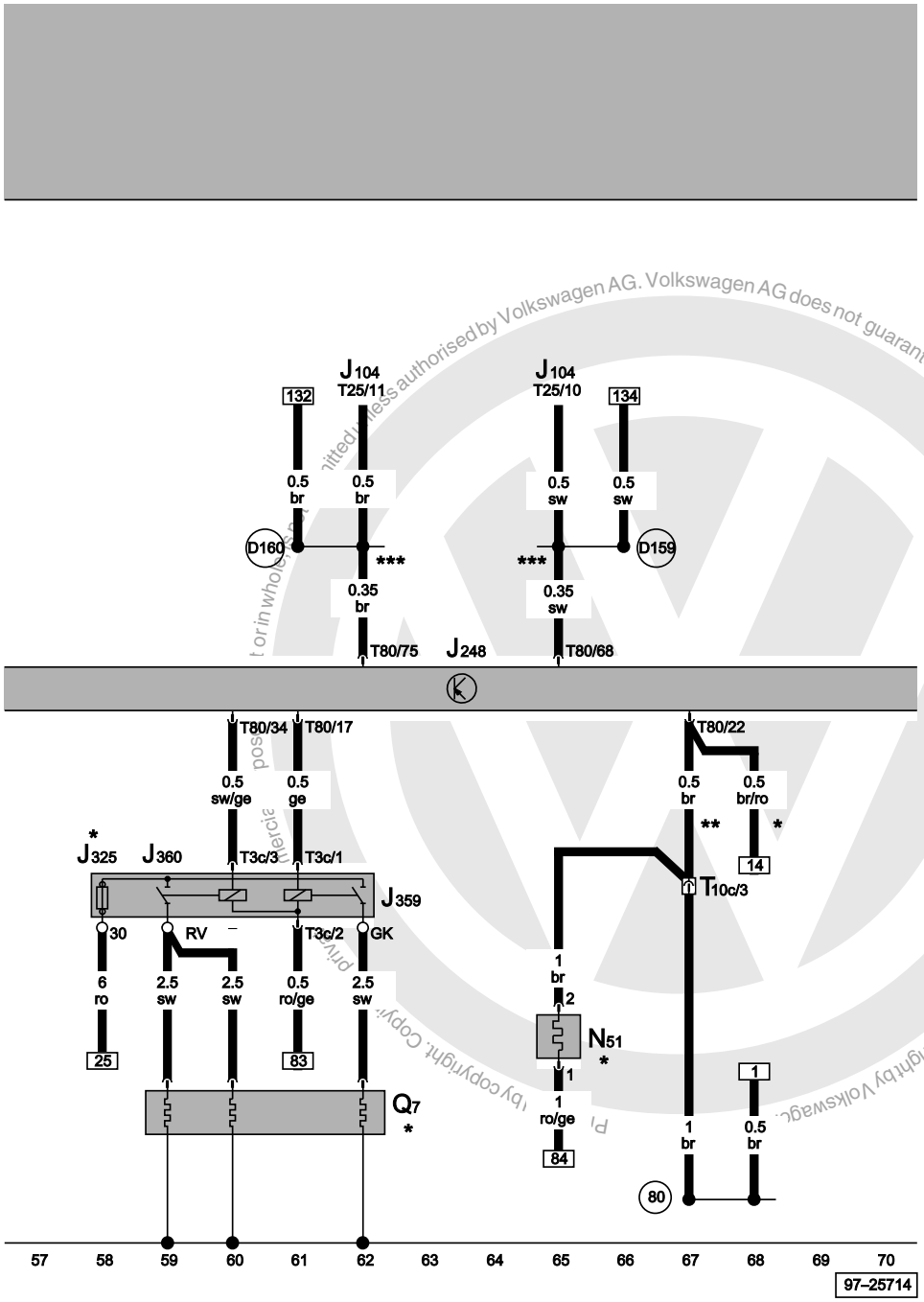

Diesel direct injection system control unit, relay for coolant heater elements, coolant haeting elements, intake manifold preheating heater element

J104	ABS with EDL control unit
J248	Diesel direct injection system control unit
J325	Coolant heater element relay
J359	Low heat output relay
J360	High heat output relay
N51	Intake manifold preheating heater element
Q7	Coolant heating elements
T10c	10-pin connector, brown, in protective housing for connectors
T25	25-pin connector
T80	80-pin connector
80	Earth connection -1-, in instruments wiring harness
D159	Positive (+) connection (high bus), in engine compartment wiring harness
D160	Positive (+) connection (low bus), in engine compartment wiring harness
*	Only models with heater for radiator
**	Only models without heater for radiator
***	Data wire

ws	=	white
sw	=	black
ro	=	red
br	=	brown
gn	=	green
bl	=	blue
gr	=	grey
li	=	purple
ge	=	yellow
or	=	orange
rs	=	pink

satelettronica

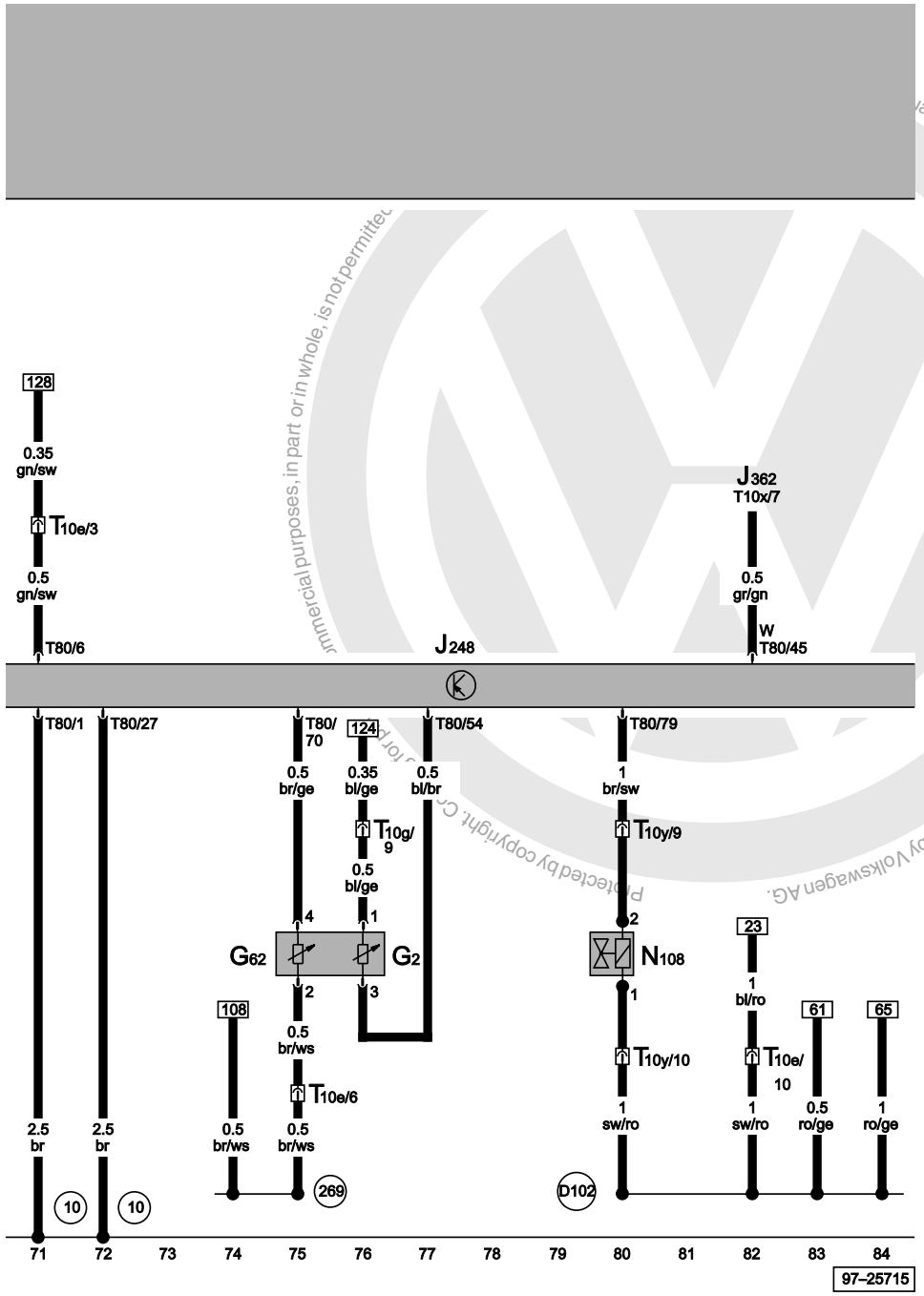

Diesel direct injection system control unit, coolant temperature sender, commencement of injection valve

G2	Coolant temperature sender
G62	Coolant temperature sender
J248	Diesel direct injection system control unit
J362	Immobilizer control unit
N108	Commencement of injection valve
T10e	10-pin connector, green, in protective housing for connectors
T10g	10-pin connector, red, in protective housing for connectors
T10x	10-pin connector
T10y	10-pin connector, blue, A pillar, left
T80	80-pin connector
10	Earth point, in plenum chamber
269	Earth connection (sender earth) -1-, in dash panel wiring harness
D102	Connection -2-, in engine compartment wiring harness

ws	=	white
sw	=	black
ro	=	red
br	=	brown
gn	=	green
bl	=	blue
gr	=	grey
li	=	purple
ge	=	yellow
or	=	orange
rs	=	pink

Protected by copyright. Copyright by Volkswagen AG. Commercial purposes, in part or in whole, is not permitted. Guarantee or accept any liability with respect to the correctness of information in this document.

satelettronica

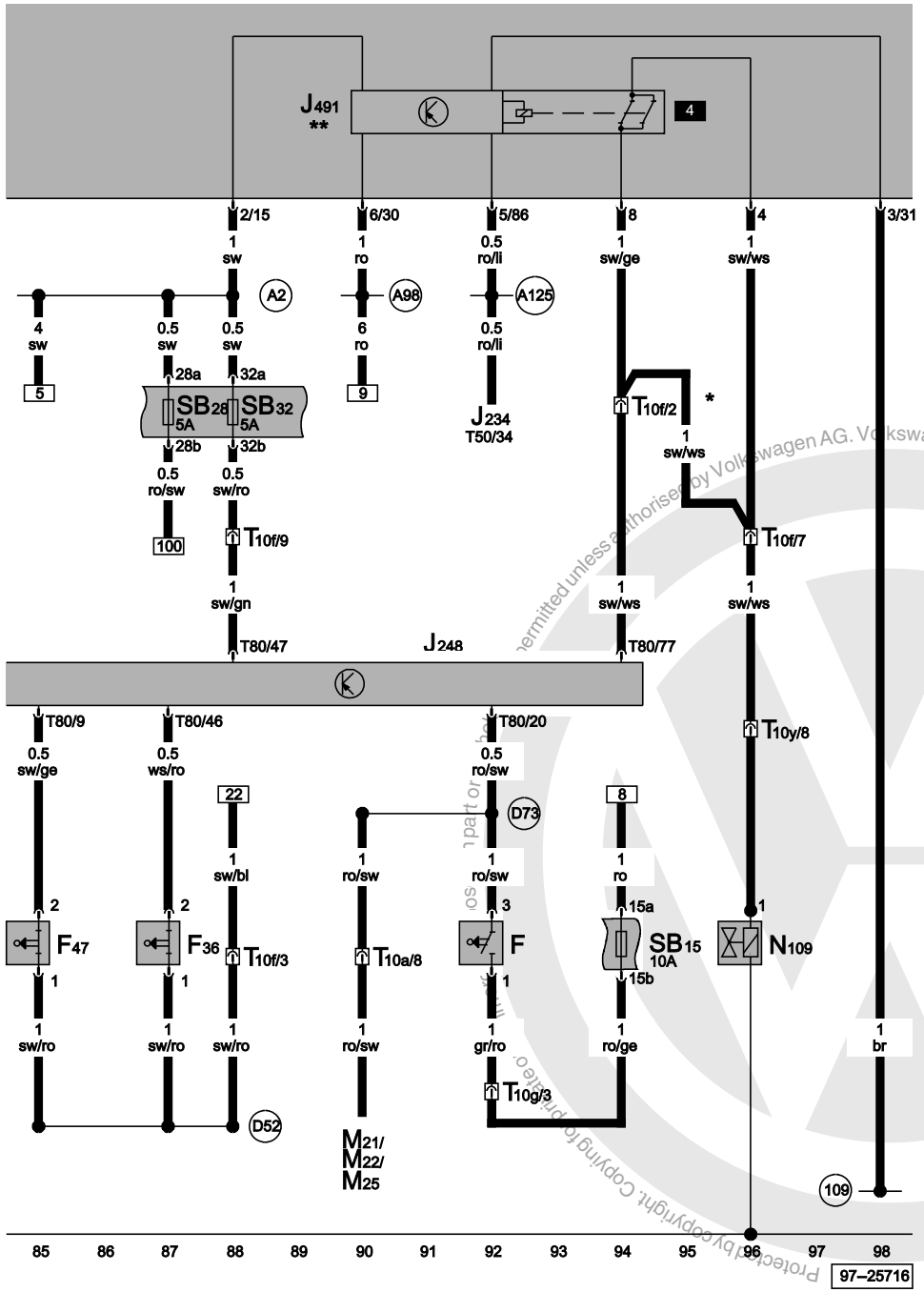

Diesel direct injection system control unit, fuel shut-off control unit (crash), brake light switch, clutch pedal switch, cruise control system brake pedal switch (diesel direct injection system), fuel shut-off valve

F	Brake light switch
F36	Clutch pedal switch
F47	Cruise control system brake pedal switch (diesel direct injection system)
J234	Airbag control unit
J248	Diesel direct injection system control unit
J491	Fuel shut-off control unit (crash)
M21	Brake and tail light bulb, left
M22	Brake and tail light bulb, right
M25	High level brake light bulb
N109	Fuel shut-off valve
SB15	Fuse -15- on fuse box
SB28	Fuse -28- on fuse box
SB32	Fuse -32- on fuse box
T10a	10-pin connector, black, in protective housing for connectors
T10f	10-pin connector, purple, in protective housing for connectors
T50	50-pin connector
T80	80-pin connector
T10g	10-pin connector, red, in protective housing for connectors
T10y	10-pin connector, blue, A pillar, left
109	Earth connection, in airbag wiring harness
A2	Positive (+) connection (15), in dash panel wiring harness
A98	Positive (+) connection -4- (30), in dash panel wiring harness
A125	Connection (crash signal), in dash panel wiring harness
D52	Positive (+) connection (15a), in engine compartment wiring harness
D73	Positive (+) connection (54), in engine compartment wiring harness
*	Does not apply to airbag
**	Only models with airbag

ws	=	white
sw	=	black
ro	=	red
br	=	brown
gn	=	green
bl	=	blue
gr	=	grey
li	=	purple
ge	=	yellow
or	=	orange
rs	=	pink

satelettronica

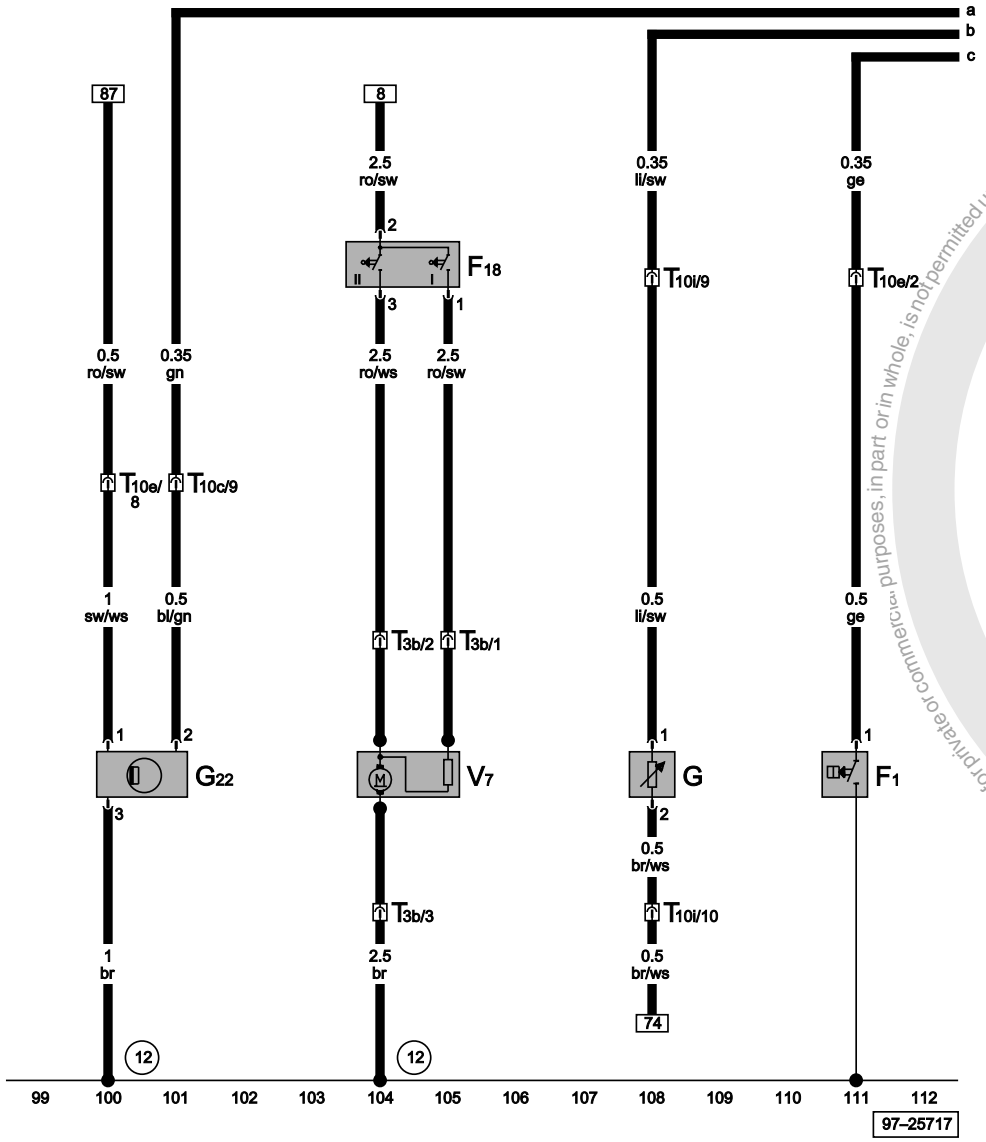

Radiator fan thermo-switch, oil pressure switch, fuel gauge sender, speedometer sender (hall sender, on gearbox)

F1	Oil pressure switch
F18	Radiator fan thermo-switch
G	Fuel gauge sender
G22	Speedometer sender (Hall sender, on gearbox)
T3b	3-pin connector, in engine compartment, front left
T10c	10-pin connector, brown, in protective housing for connectors
T10e	10-pin connector, green, in protective housing for connectors
T10i	10-pin connector, orange, in protective housing for connectors
V7	Radiator fan
12	Earth point, in engine compartment, left

ws	=	white
sw	=	black
ro	=	red
br	=	brown
gn	=	green
bl	=	blue
gr	=	grey
li	=	purple
ge	=	yellow
or	=	orange
rs	=	pink

Protected by copyright. Copying for private or commercial purposes, in part or in whole, is not permitted unless authorised by Volkswagen AG. Volkswagen AG does not guarantee or accept any liability with respect to the correctness of information in this document. Copyright by Volkswagen AG.
satelettronica

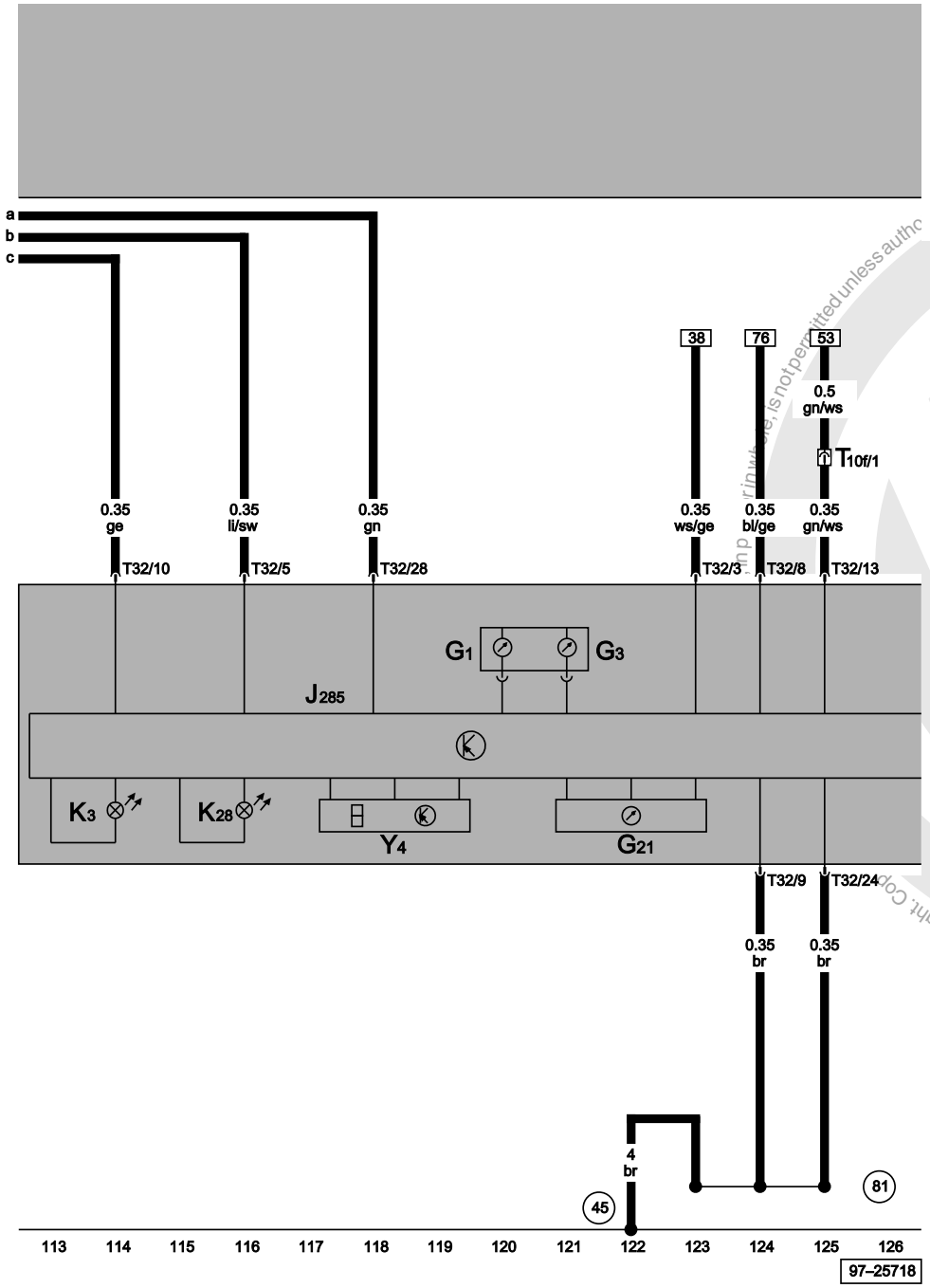

Control unit with display in dash panel insert, fuel gauge ,coolant temperature gauge, speedometer, oil pressure warning lamp, coolant temperature/coolant shortage warning lamp, odometer display

G1	Fuel gauge
G3	Coolant temperature gauge
G21	Speedometer
J285	Control unit with display in dash panel insert
K3	Oil pressure warning lamp
K28	Coolant temperature/coolant shortage warning lamp
T10f	10-pin connector, purple, in protective housing for connectors
T32	32-pin connector, blue
Y4	Odometer display
45	Earth point, behind dash panel - centre
81	Earth connection -1-, in dash panel wiring harness

ws	=	white
sw	=	black
ro	=	red
br	=	brown
gn	=	green
bl	=	blue
gr	=	grey
li	=	purple
ge	=	yellow
or	=	orange
rs	=	pink

Protected by copyright. Copyright by Volkswagen AG.
Copyright by Volkswagen AG. Volkswagen AG does not accept any liability with respect to the correctness of information in this document. Copyright by Volkswagen AG. Reproduction, even in part, is not permitted unless authorised by Volkswagen AG.
satelettronica

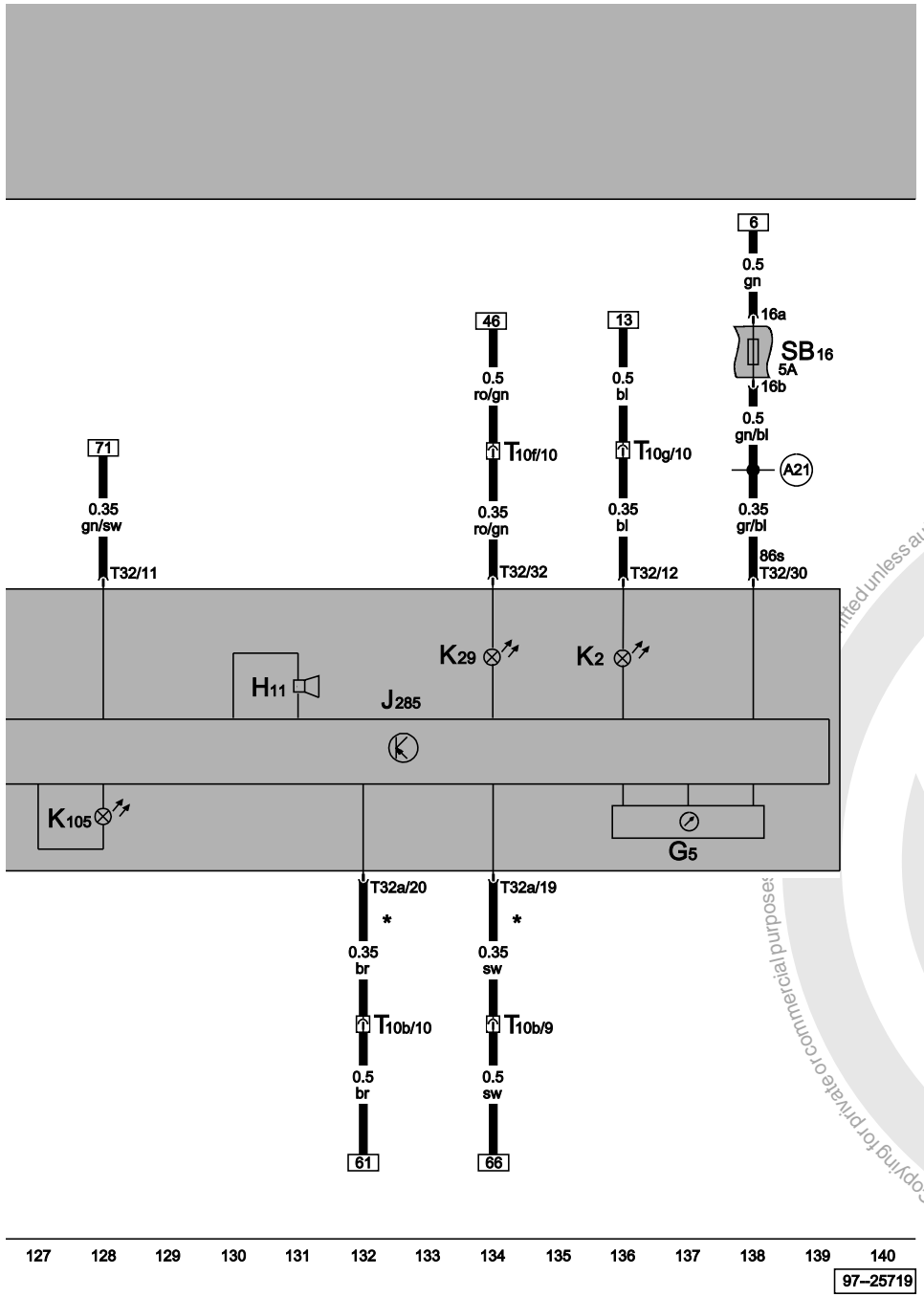

Control unit with display in dash panel insert, rev. counter oil pressure warning buzzer, alternator warning lamp

G5	Rev. counter
H11	Oil pressure warning buzzer
J285	Control unit with display in dash panel insert
K2	Alternator warning lamp
K29	Glow period warning lamp
K105	Reserve fuel warning lamp
SB16	Fuse -16- on fuse box
T10b	10-pin connector, white, in protective housing for connectors
T10f	10-pin connector, purple, in protective housing for connectors
T10g	10-pin connector, red, in protective housing for connectors
T32	32-pin connector, blue
T32a	32-pin connector, green
A21	Connection (86s), in dash panel wiring harness
*	Data wire

ws	=	white
sw	=	black
ro	=	red
br	=	brown
gn	=	green
bl	=	blue
gr	=	grey
li	=	purple
ge	=	yellow
or	=	orange
rs	=	pink

Protected by copyright. Copying for private or commercial purposes is not permitted unless authorised by Volkswagen AG. Volkswagen AG does not guarantee or accept any liability with respect to the correctness of information in this document. Copyright by Volkswagen AG.
satelettronica

1.9 l/66 kW turbo-diesel engine, engine codes AGR/ALH

From October 1999

1.9 l/66 kW turbo-diesel engine, engine codes AGR, from October 1999

For alternatives to relay and fuse positions as well as multi-pin connector wiring - see "Fitting locations" section.

Relay locations on relay plate:

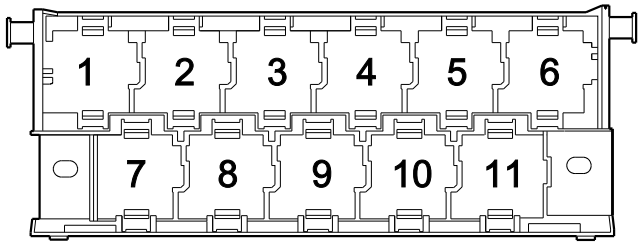

97-22850

2 - Glow plug relay (103)
4 - Fuel shut- off control unit (405)
6 - X contact relief relay (100)
7 - Terminal 30 voltage supply relay, only engine compartment SDI/TDI (109)

Note:

- *The number in brackets behind the part designation denotes the control number on the housing.*

Fuse colours

30 A - green
25 A - white
20 A - yellow
15 A - blue
10 A - red
7.5 A - brown
5 A - beige
3 A - purple

Protected by copyright. Copying for private or commercial purposes, in part or in whole, is not permitted unless authorised by Volkswagen AG. Volkswagen AG does not guarantee or accept any liability with respect to the correctness of information in this document. Copyright by Volkswagen AG.

satelettronica

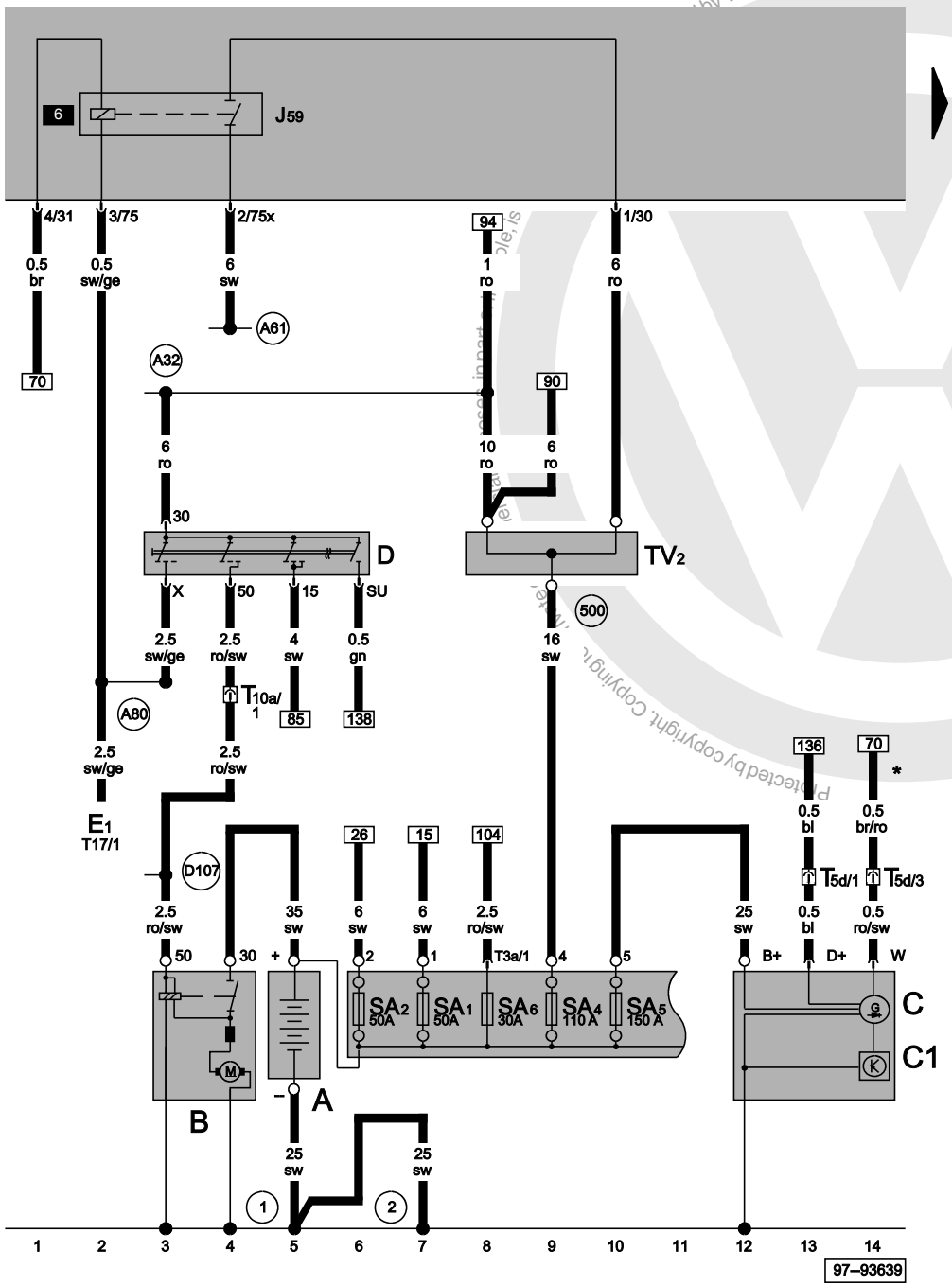

Starter, battery, alternator, voltage regulator, ignition/starter switch, terminal 30 junction box, X contact relief relay

A	Battery
B	Starter
C	Alternator
C1	Voltage regulator
D	Ignition/starter switch
E1	Lighting switch
J59	X contact relief relay
SA1	Fuse -1- on battery fuse box
SA2	Fuse -2- on battery fuse box
SA3	Fuse -3- on battery fuse box
SA4	Fuse -4- on battery fuse box
SA5	Fuse -5- on battery fuse box
SA6	Fuse -6- on battery fuse box
TV2	Terminal 30 junction box
T3a	3-pin connector, near battery
T5d	5-pin connector, near gearbox
T10a	10-pin connector, black
T17	17-pin connector
1	Earth strap, battery - body
2	Earth strap, gearbox - body
500	Screw connection -1- (30), on relay plate
A32	Positive (+) connection (30), in dash panel wiring harness
A61	Positive (+) connection (X), in instruments wiring harness
A80	Connection -1- (X), in dash panel wiring harness
D107	Connection -5-, in engine compartment wiring harness
*	Only models with aditional heating

ws	=	white
sw	=	black
ro	=	red
br	=	brown
gn	=	green
bl	=	blue
gr	=	grey
li	=	purple
ge	=	yellow
or	=	orange
rs	=	pink

satelettronica

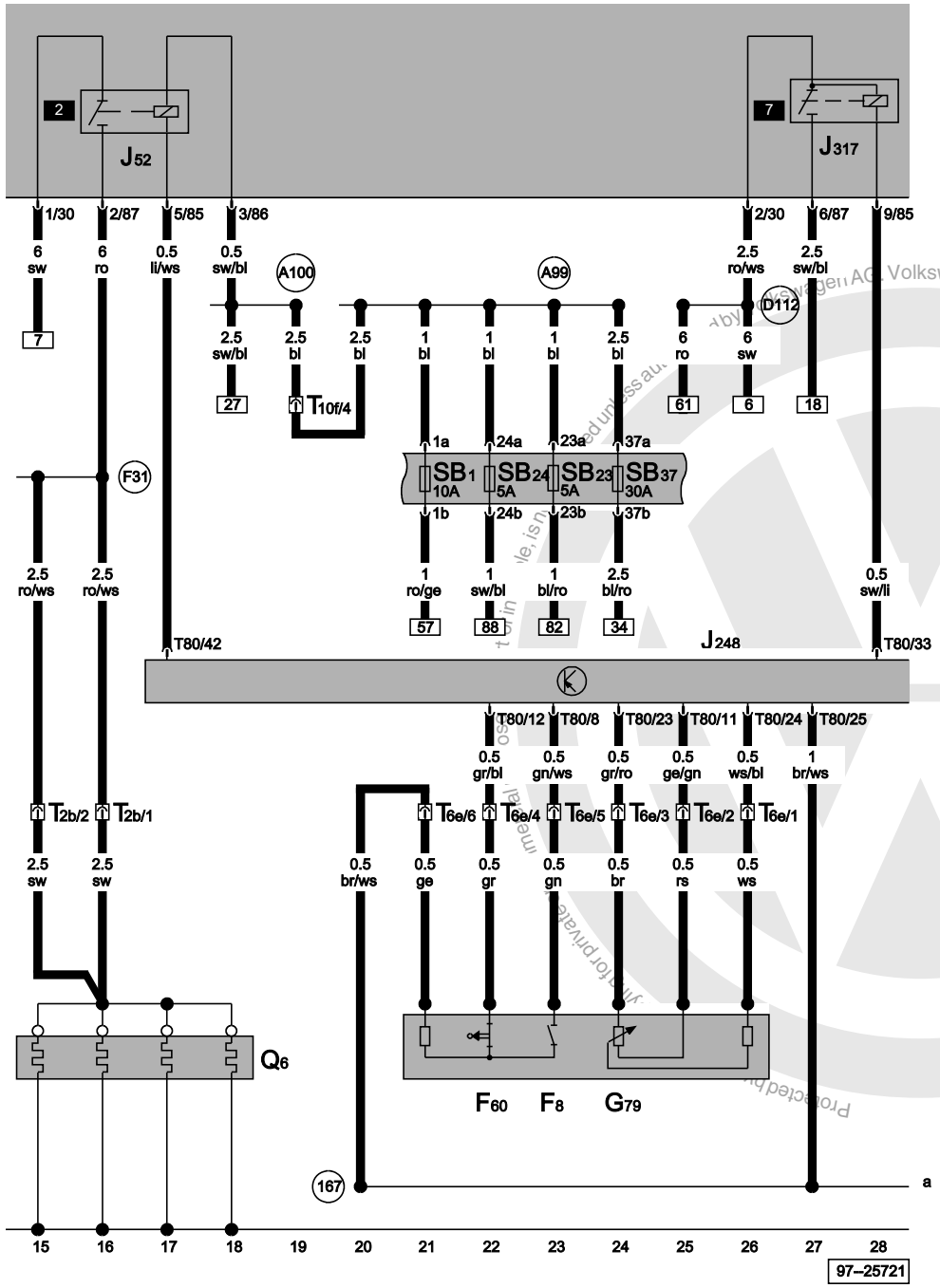

Diesel direct injection system control unit, relay for glow plugs, glow plugs (engine), terminal 30 voltage supply relay ,kick-down switch, idling switch, accelerator pedal position sender

F8	Kick-down switch
F60	Idling switch
G79	Accelerator pedal position sender
J52	Glow plug relay
J248	Diesel direct injection system control unit
J317	Terminal 30 voltage supply relay
Q6	Glow plugs - (engine)
SB1	Fuse -1- on fuse box
SB23	Fuse -23- on fuse box
SB24	Fuse -24- on fuse box
SB37	Fuse -37- on fuse box
T2b	2-pin connector, in engine
T6e	6-pin connector, on left C-pillar
T10f	10-pin connector, purple, in protective housing for connectors
T80	80-pin connector
167	Earth connection -4-, in engine compartment wiring harness
A99	Connection -1- (87), in dash panel wiring harness
A100	Connection -2- (87), in dash panel wiring harness
D112	Connection -10-, in engine compartment wiring harness
F31	Connection (glow plugs - engine), in diesel direct injection system wiring harness

ws	=	white
sw	=	black
ro	=	red
br	=	brown
gn	=	green
bl	=	blue
gr	=	grey
li	=	purple
ge	=	yellow
or	=	orange
rs	=	pink

satelettronica

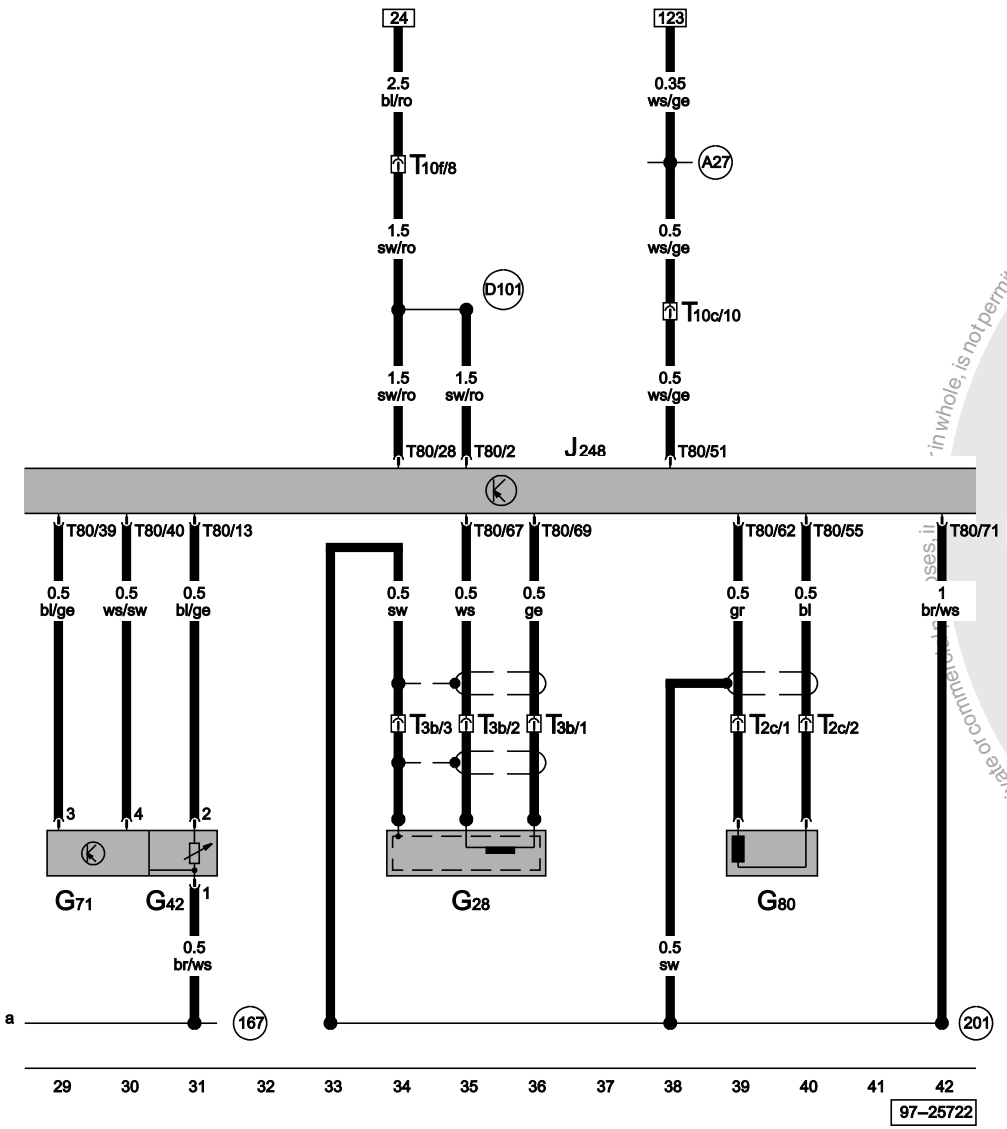

Diesel direct injection system control unit, engine speed sender, intake manifold pressure sender, needle lift sender, intake air temperature sender

G28	Engine speed sender
G42	Intake air temperature sender
G71	Intake manifold pressure sender
G80	Needle lift sender
J248	Diesel direct injection system control unit
T2c	2-pin connector
T3b	3-pin connector, in engine compartment, front left
T10c	10-pin connector, brown, in protective housing for connectors
T10f	10-pin connector, purple, in protective housing for connectors
T80	80-pin connector
167	Earth connection -4-, in engine compartment wiring harness
201	Earth connection -5-, in engine compartment wiring harness
A27	Connection (speed signal), in dash panel wiring harness
D101	Connection -1-, in engine compartment wiring harness

ws	=	white
sw	=	black
ro	=	red
br	=	brown
gn	=	green
bl	=	blue
gr	=	grey
li	=	purple
ge	=	yellow
or	=	orange
rs	=	pink

Protected by copyright. Copying for private or commercial purposes, in whole, is not permitted unless authorised by Volkswagen AG. Volkswagen AG does not guarantee or accept any liability with respect to the correctness of information in this document. Copyright by Volkswagen AG.

satelettronica

Diesel direct injection system control unit, charge pressure control solenoid valve, intake manifold flap change-over valve, fuel temperature sender, modulating piston movement sender, metering adjuster

G81	Fuel temperature sender
G149	Modulating piston movement sender
J248	Diesel direct injection system control unit
N75	Charge pressure control solenoid valve
N146	Metering adjuster
N239	Intake manifold flap change-over valve
T10y	10-pin connector, blue, A pillar, left
T80	80-pin connector
E30	Connection (87a), in engine wiring harness
F25	Connection -1-, in diesel direct injection system wiring harness

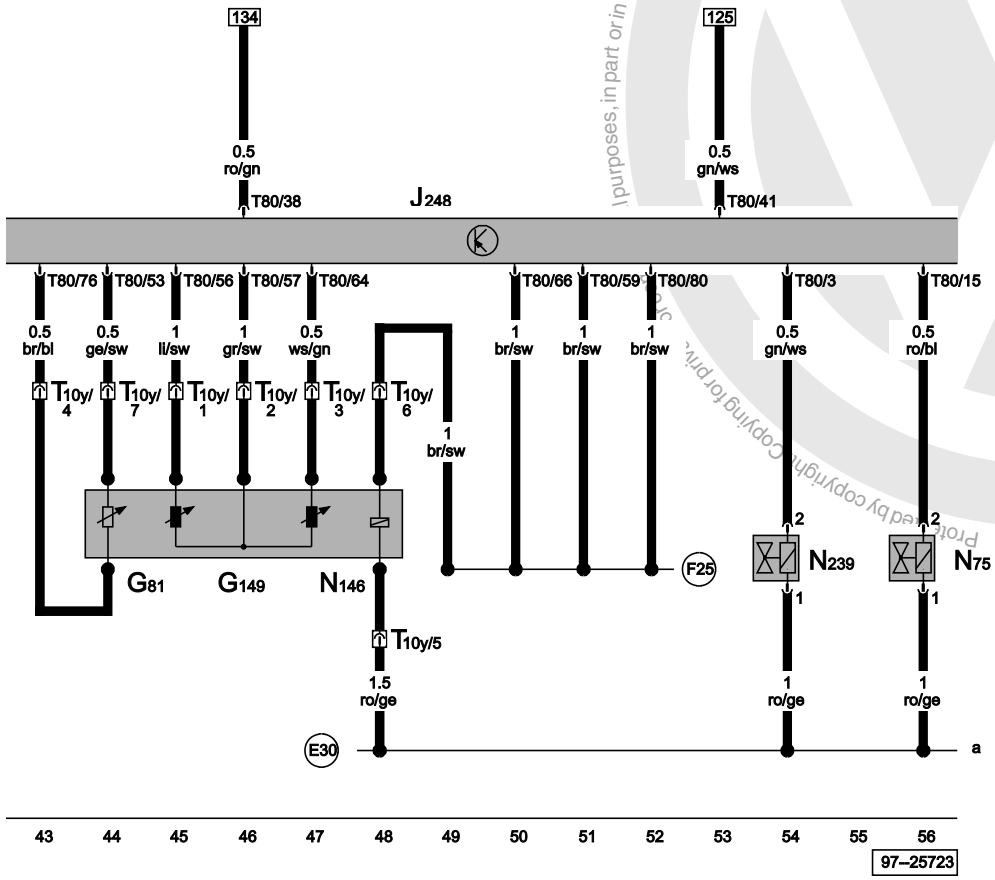

ws	=	white
sw	=	black
ro	=	red
br	=	brown
gn	=	green
bl	=	blue
gr	=	grey
li	=	purple
ge	=	yellow
or	=	orange
rs	=	pink

satelettronica

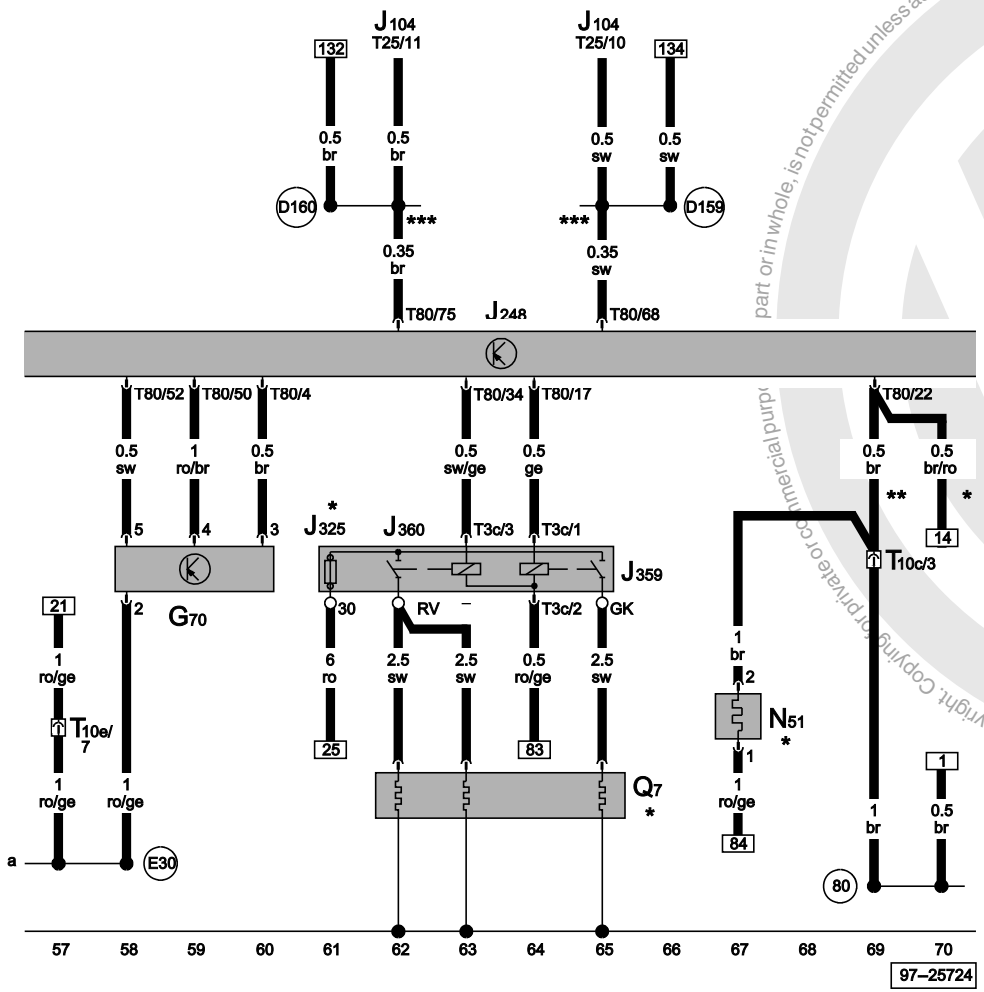

Diesel direct injection system control unit, relay for coolant hater elements, coolant heating elements, intake manifold preheating heater element, air mass meter

G70	Air mass meter
J104	ABS with EDL control unit
J248	Diesel direct injection system control unit
J325	Coolant heater element relay
J359	Low heat output relay
J360	High heat output relay
N51	Intake manifold preheating heater element
Q7	Coolant heating elements
T10c	10-pin connector, brown, in protective housing for connectors
T10e	10-pin connector, green, in protective housing for connectors
T25	25-pin connector
T80	80-pin connector
80	Earth connection -1-, in instruments wiring harness
D159	Positive (+) connection (high bus), in engine compartment wiring harness
D160	Positive (+) connection (low bus), in engine compartment wiring harness
E30	Connection (87a), in engine wiring harness
*	Only models with heater for radiator
**	Only models without heater for radiator
***	Data wire

ws	=	white
sw	=	black
ro	=	red
br	=	brown
gn	=	green
bl	=	blue
gr	=	grey
li	=	purple
ge	=	yellow
or	=	orange
rs	=	pink

Protected by copyright. Copying for private or commercial purposes, in part or in whole, is not permitted unless authorised by Volkswagen AG. Volkswagen AG does not give any warranty or accept any liability with respect to the correctness of information in this document. Copyright by Volkswagen AG.
satelettronica

Diesel direct injection system control unit, coolant temperature sender, exhaust gas recirculation valve, commencement of injection valve

G2	Coolant temperature sender
G62	Coolant temperature sender
J362	Immobilizer control unit
J248	Diesel direct injection system control unit
N18	Exhaust gas recirculation valve
N108	Commencement of injection valve
T10e	10-pin connector, green, in protective housing for connectors
T10g	10-pin connector, red, in protective housing for connectors
T10x	10-pin connector
T10y	10-pin connector, blue, A pillar, left
T80	80-pin connector
(10)	Earth point, in plenum chamber
(D102)	Connection -2-, in engine compartment wiring harness

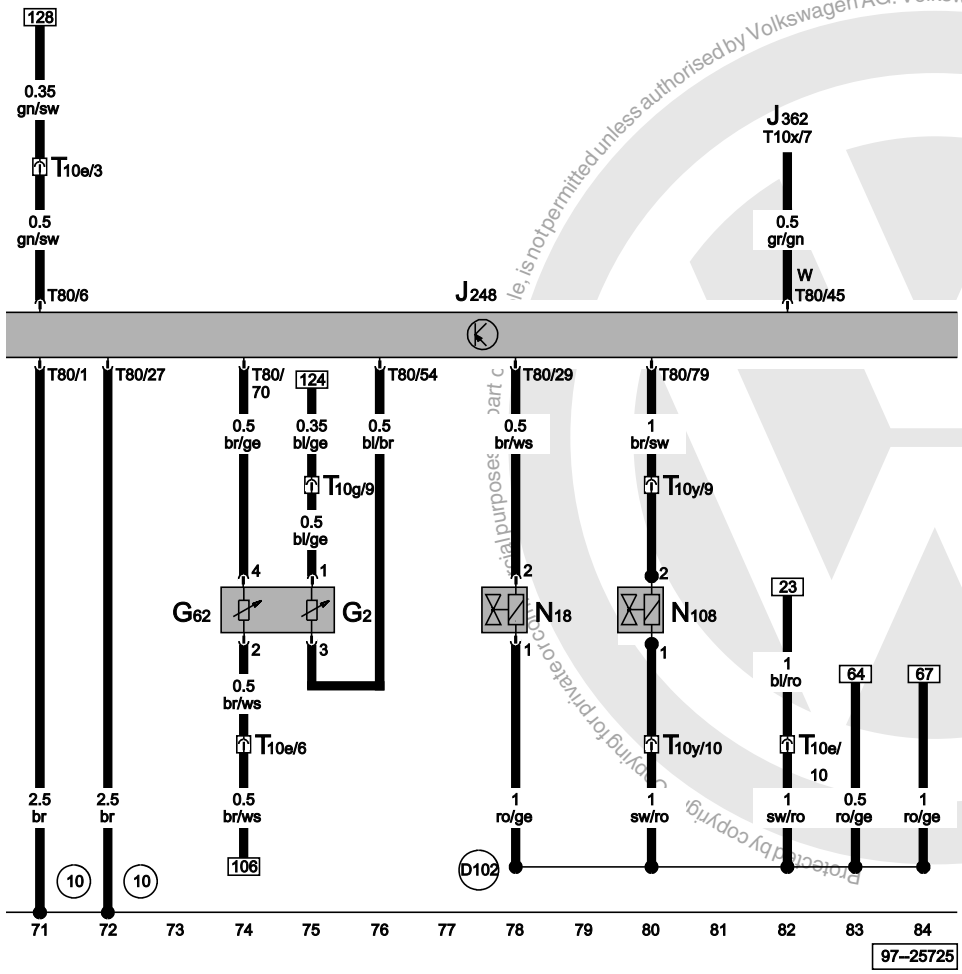

ws	=	white
sw	=	black
ro	=	red
br	=	brown
gn	=	green
bl	=	blue
gr	=	grey
li	=	purple
ge	=	yellow
or	=	orange
rs	=	pink

Protected by copyright. Copying for private or commercial purposes, in part or in whole, is not permitted unless authorised by Volkswagen AG. Volkswagen AG does not guarantee or accept any liability with respect to the correctness of information in this document. Copyright by Volkswagen AG.

satelettronica

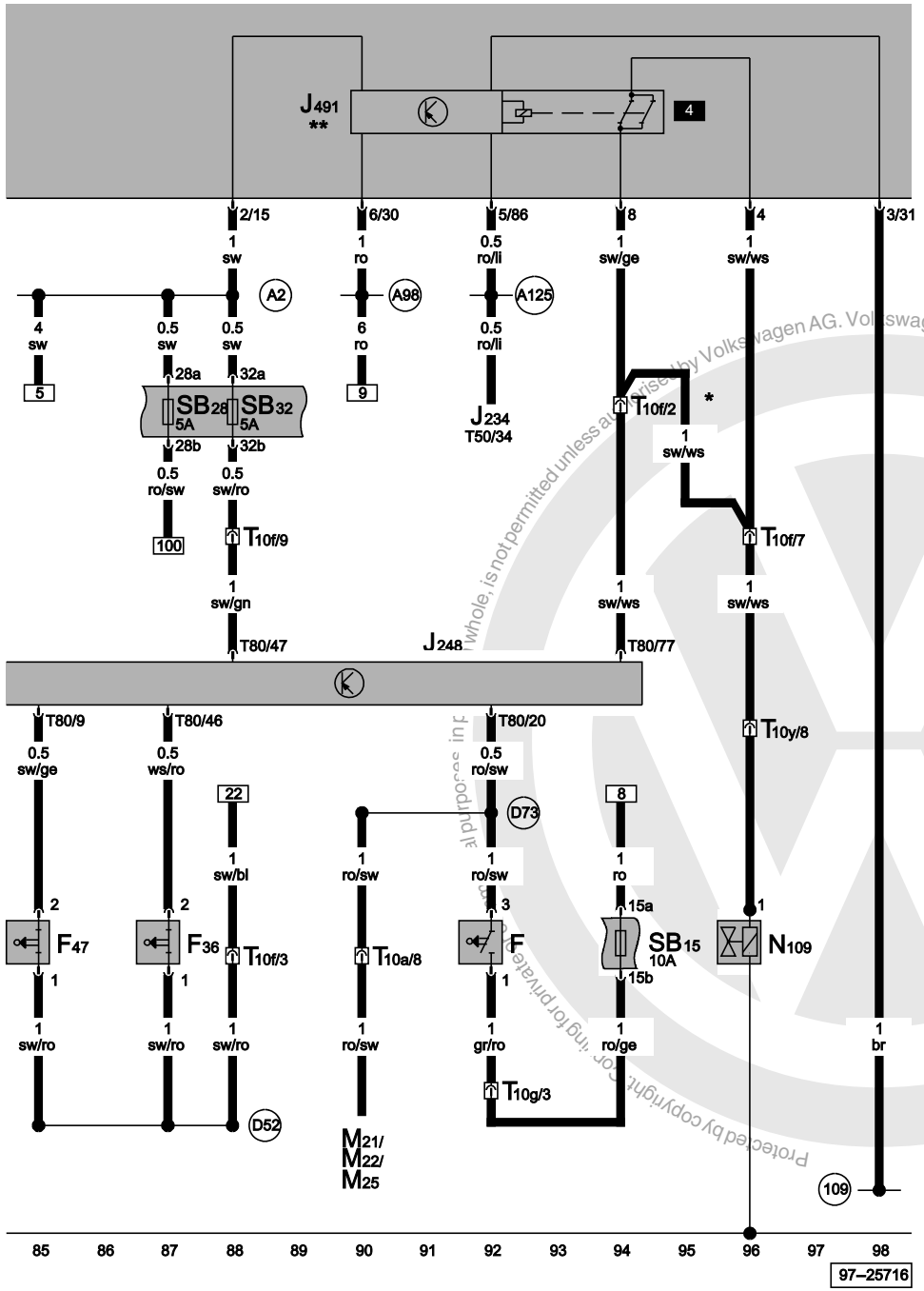

Diesel direct injection system control unit, fuel shut-off control unit (crash), brake light switch, clutch pedal switch for warning buzzer, cruise control system brake pedal switch (diesel direct injection system), fuel shut-off valve

F	Brake light switch
F36	Clutch pedal switch
F47	Cruise control system brake pedal switch (diesel direct injection system)
J234	Airbag control unit
J248	Diesel direct injection system control unit
J491	Fuel shut-off control unit (crash)
M21	Brake and tail light bulb, left
M22	Brake and tail light bulb, right
M25	High level brake light bulb
N109	Fuel shut-off valve
SB15	Fuse -15- on fuse box
SB28	Fuse -28- on fuse box
SB32	Fuse -32- on fuse box
T10a	10-pin connector, black, in protective housing for connectors
T10f	10-pin connector, purple, in protective housing for connectors
T50	50-pin connector
T80	80-pin connector
T10g	10-pin connector, red, in protective housing for connectors
T10y	10-pin connector, blue, A pillar, left
109	Earth connection, in airbag wiring harness
A2	Positive (+) connection (15), in dash panel wiring harness
A98	Positive (+) connection -4- (30), in dash panel wiring harness
A125	Connection (crash signal), in dash panel wiring harness
D52	Positive (+) connection (15a), in engine compartment wiring harness
D73	Positive (+) connection (54), in engine compartment wiring harness
*	Does not apply to airbag
**	Only models with airbag

ws	=	white
sw	=	black
ro	=	red
br	=	brown
gn	=	green
bl	=	blue
gr	=	grey
li	=	purple
ge	=	yellow
or	=	orange
rs	=	pink

Protected by copyright. Copying for private and commercial purposes in any form and by any means, in whole or in part, is not permitted unless authorised by Volkswagen AG. Volkswagen AG does not guarantee or accept any liability with respect to the correctness of information in this document. Copyright by Volkswagen AG.
satelettronica

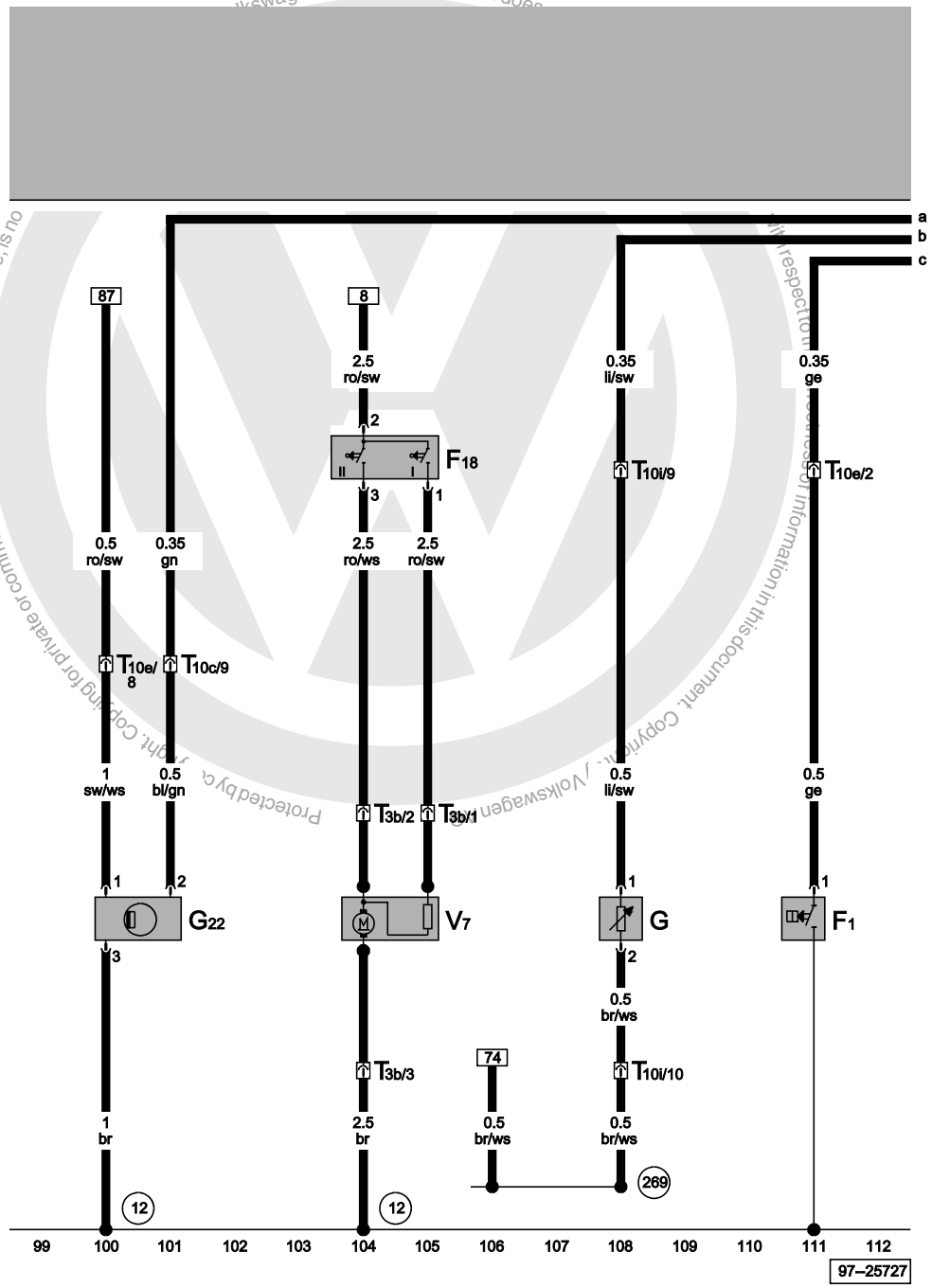

Radiator fan thermo-switch, oil pressure switch, fuel gauge sender, speedometer sender (hall sender, on gearbox)

F1	Oil pressure switch
F18	Radiator fan thermo-switch
G	Fuel gauge sender
G22	Speedometer sender (Hall sender, on gearbox)
T3b	3-pin connector, in engine compartment, front left
T10c	10-pin connector, brown, in protective housing for connectors
T10e	10-pin connector, green, in protective housing for connectors
T10i	10-pin connector, orange, in protective housing for connectors
V7	Radiator fan
12	Earth point, in engine compartment, left
269	Earth connection (sender earth) -1-, in dash panel wiring harness

ws	=	white
sw	=	black
ro	=	red
br	=	brown
gn	=	green
bl	=	blue
gr	=	grey
li	=	purple
ge	=	yellow
or	=	orange
rs	=	pink

Protected by copyright. Copying for private or commercial purposes, in part or in whole, is not permitted without the express consent of Volkswagen AG. Volkswagen AG does not guarantee or assume any liability with respect to the correctness of information in this document. Copyright by Volkswagen AG.
satelettronica

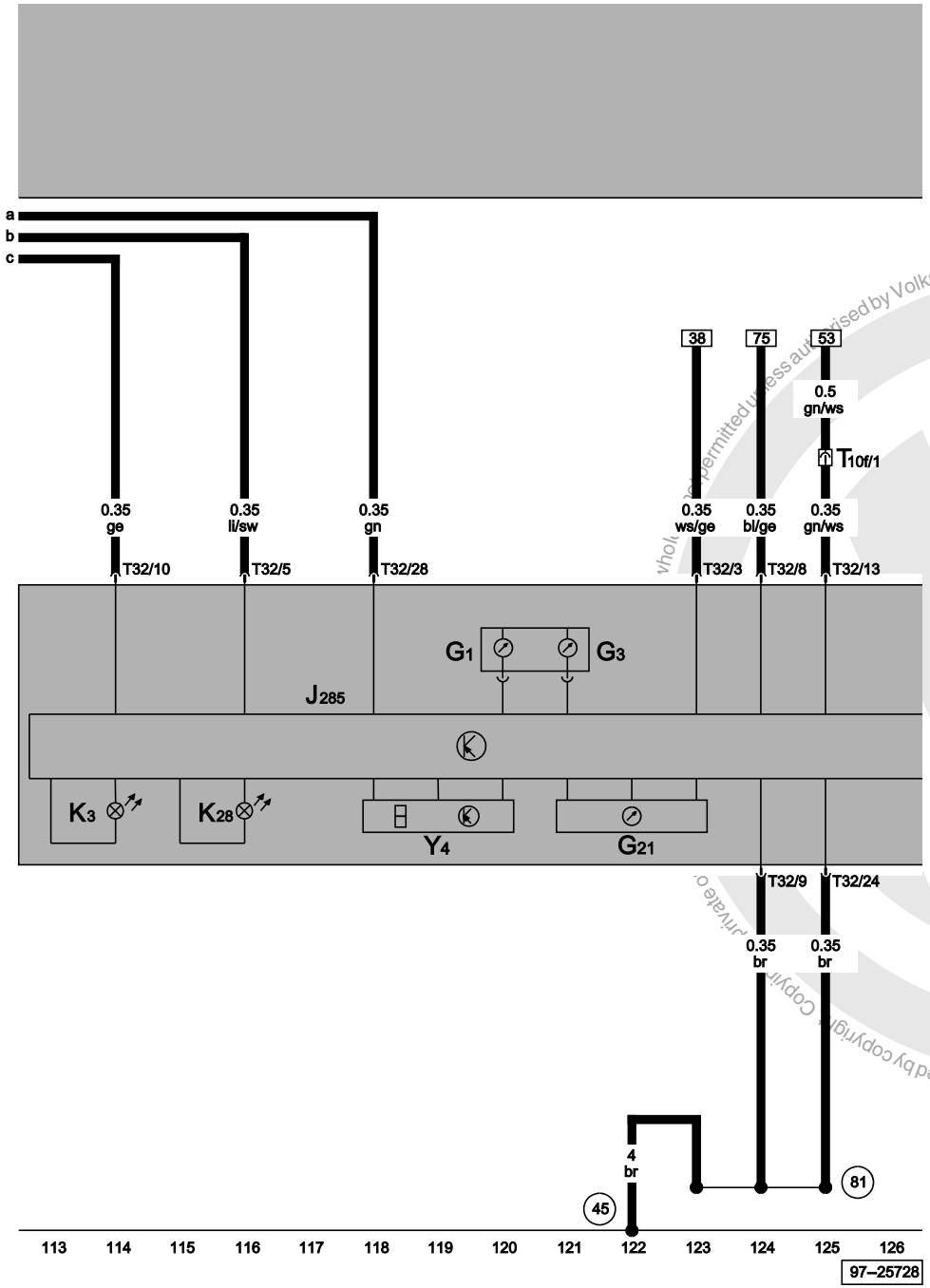

Control unit with display in dash panel insert, fuel gauge, coolant temperature gauge, speedometer, oil pressure warning lamp, coolant temperature/coolant shortage warning lamp odometer display

G1	Fuel gauge
G3	Coolant temperature gauge
G21	Speedometer
J285	Control unit with display in dash panel insert
K3	Oil pressure warning lamp
K28	Coolant temperature/coolant shortage warning lamp
T10f	10-pin connector, purple, in protective housing for connectors
T32	32-pin connector, blue
Y4	Odometer display
45	Earth point, behind dash panel - centre
81	Earth connection -1-, in dash panel wiring harness

ws	=	white
sw	=	black
ro	=	red
br	=	brown
gn	=	green
bl	=	blue
gr	=	grey
li	=	purple
ge	=	yellow
or	=	orange
rs	=	pink

Protected by copyright. Copyright by Volkswagen AG. Volkswagen AG does not guarantee or accept any liability with respect to the correctness of information in this document. Copyright by Volkswagen AG. Copying for private or commercial purposes, in whole or in part, is not permitted unless authorised by Volkswagen AG.
satelettronica

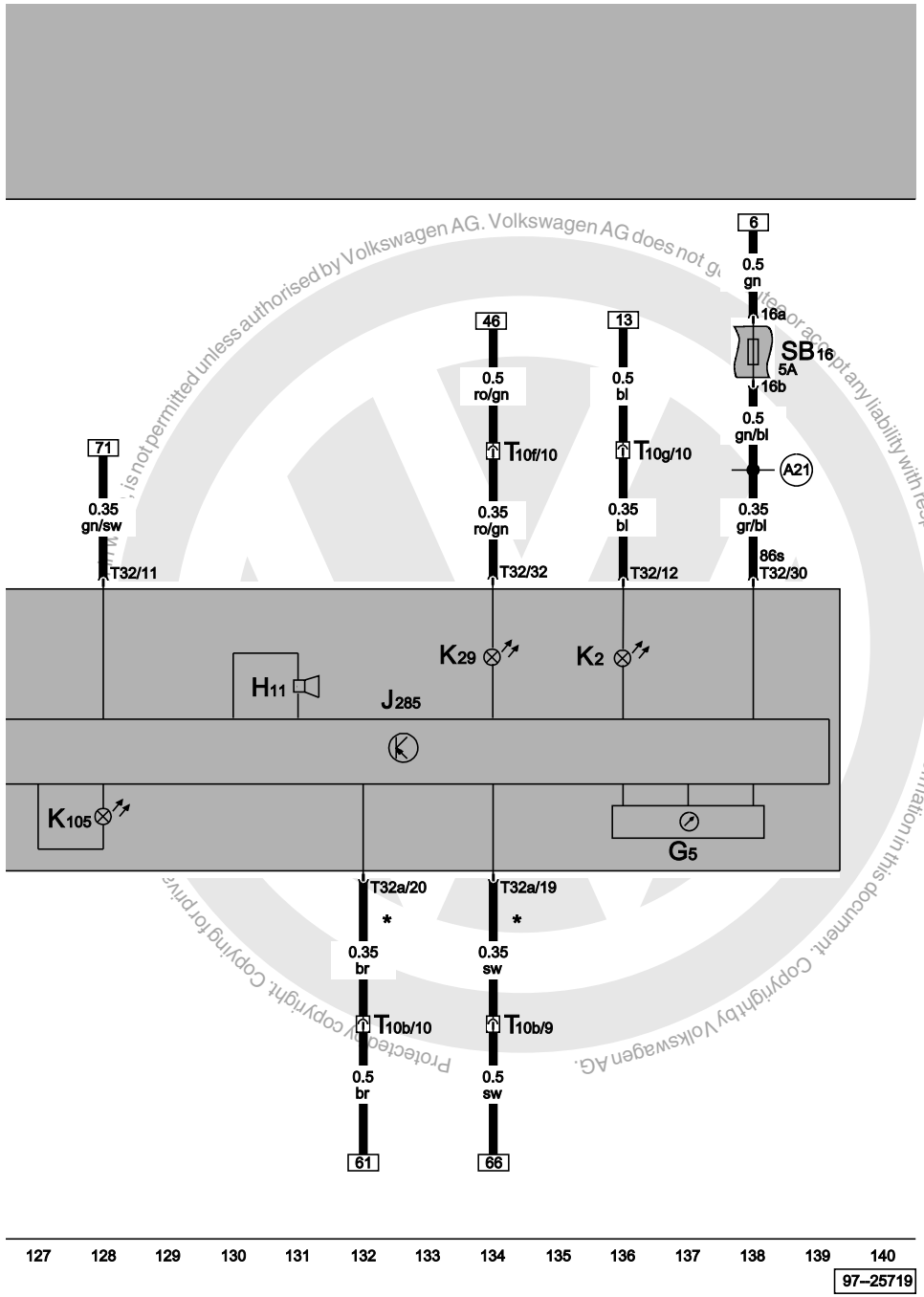

Control unit with display in dash panel insert, rev. counter, oil pressure warning buzzer, alternator warning lamp

G5	Rev. counter
H11	Oil pressure warning buzzer
J285	Control unit with display in dash panel insert
K2	Alternator warning lamp
K29	Glow period warning lamp
K105	Reserve fuel warning lamp
SB16	Fuse -16- on fuse box
T10b	10-pin connector, white, in protective housing for connectors
T10f	10-pin connector, purple, in protective housing for connectors
T10g	10-pin connector, red, in protective housing for connectors
T32	32-pin connector, blue
T32a	32-pin connector, green
(A21)	Connection (86s), in dash panel wiring harness
*	Data wire

ws	=	white
sw	=	black
ro	=	red
br	=	brown
gn	=	green
bl	=	blue
gr	=	grey
li	=	purple
ge	=	yellow
or	=	orange
rs	=	pink

satelettronica

1.6 l /55 kW Motronic, engine codes ALM

From October 1999

For alternatives to relay and fuse positions as well as multi-pin connector wiring - see "Fitting locations" section.

Relay locations on relay plate:

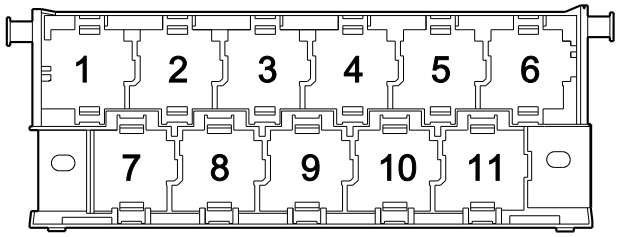

97-22850

2 - Fuel pump relay (167)
4 - Fuel shut-off control unit (405)
6 - X contact relief relay (100)

Note:

- *The number in brackets behind the part designation denotes the control number on the housing.*

Fuse colours

30 A - green
25 A - white
20 A - yellow
15 A - blue
10 A - red
7.5 A - brown
5 A - beige
3 A - purple

Protected by copyright. Copying for private or commercial purposes, in part or in whole, is not permitted unless authorised by Volkswagen AG. Volkswagen AG does not guarantee or accept any liability with respect to the correctness of information in this document. Copyright by Volkswagen AG.
satelettronica

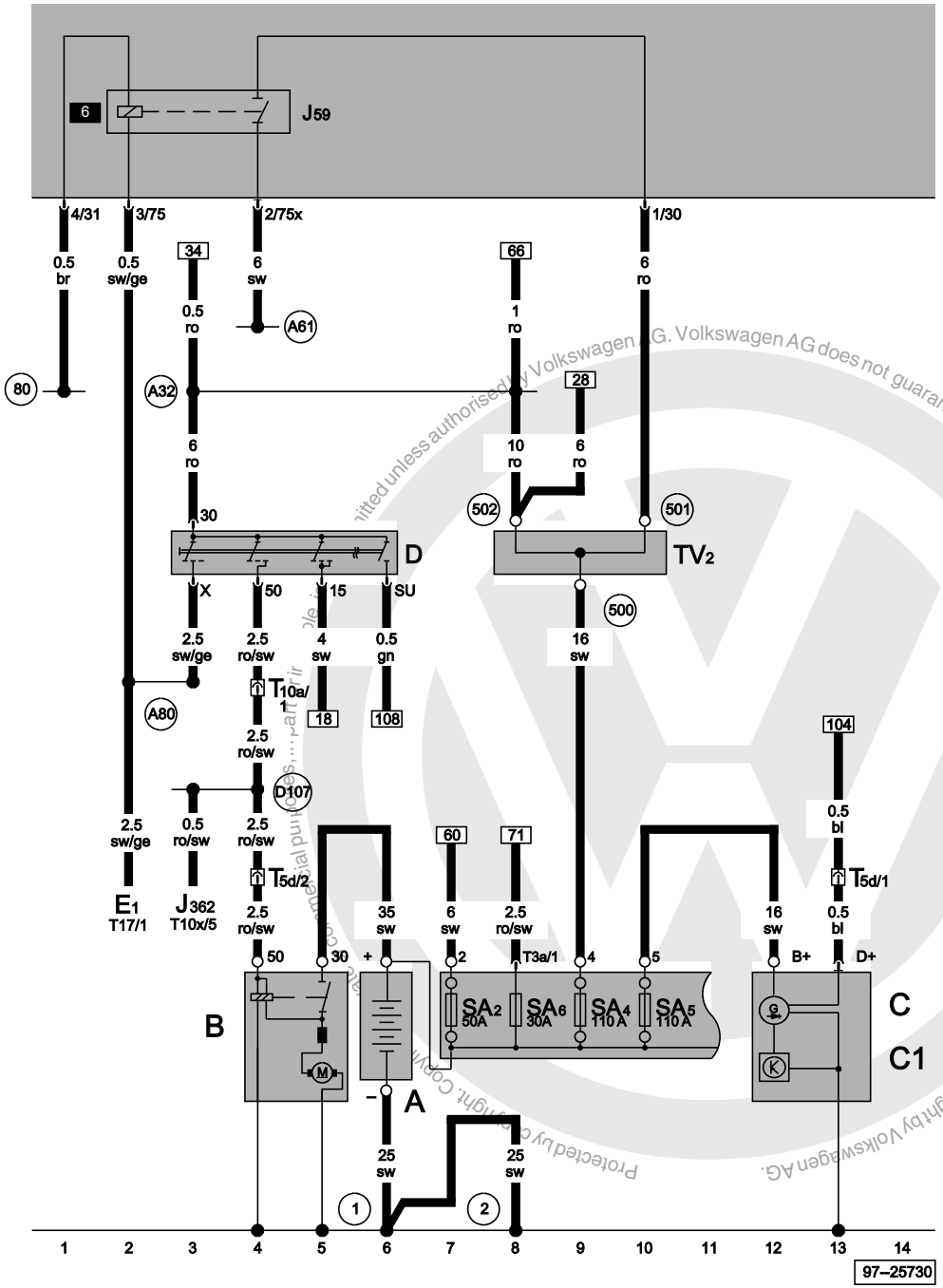

Battery, starter, alternator, voltage regulator, ignition/starter switch, terminal 30 junction box

A	Battery
B	Starter
C	Alternator
C1	Voltage regulator
D	Ignition/starter switch
E1	Lighting switch
J59	X contact relief relay
J362	Immobilizer control unit
SA2	Fuse -2- on battery fuse box
SA4	Fuse -4- on battery fuse box
SA5	Fuse -5- on battery fuse box
SA6	Fuse -6- on battery fuse box
TV2	Terminal 30 junction box
T3a	3-pin connector, in battery
T5d	5-pin connector, in engine, near gearbox
T10a	10-pin connector, black, in protective housing for connectors
T10x	10-pin connector
T17	17-pin connector
1	Earth strap, battery - body
2	Earth strap, gearbox - body
80	Earth connection -1-, in instruments wiring harness
500	Screw connection -1- (30), on relay plate
501	Screw connection -2- (30), on relay plate
502	Screw connection -1- (30a), on relay plate
A32	Positive (+) connection (30), in dash panel wiring harness
A61	Positive (+) connection (X), in instruments wiring harness
A80	Connection -1- (X), in dash panel wiring harness
D107	Connection -5-, in engine compartment wiring harness

ws	=	white
sw	=	black
ro	=	red
br	=	brown
gn	=	green
bl	=	blue
gr	=	grey
li = purple
ge = yellow
or = orange
rs = pink

Protected by copyright. Copyright by Volkswagen AG. Volkswagen AG does not guarantee or accept any liability with respect to the correctness of information in this document. Copyright by Volkswagen AG.
satelettronica

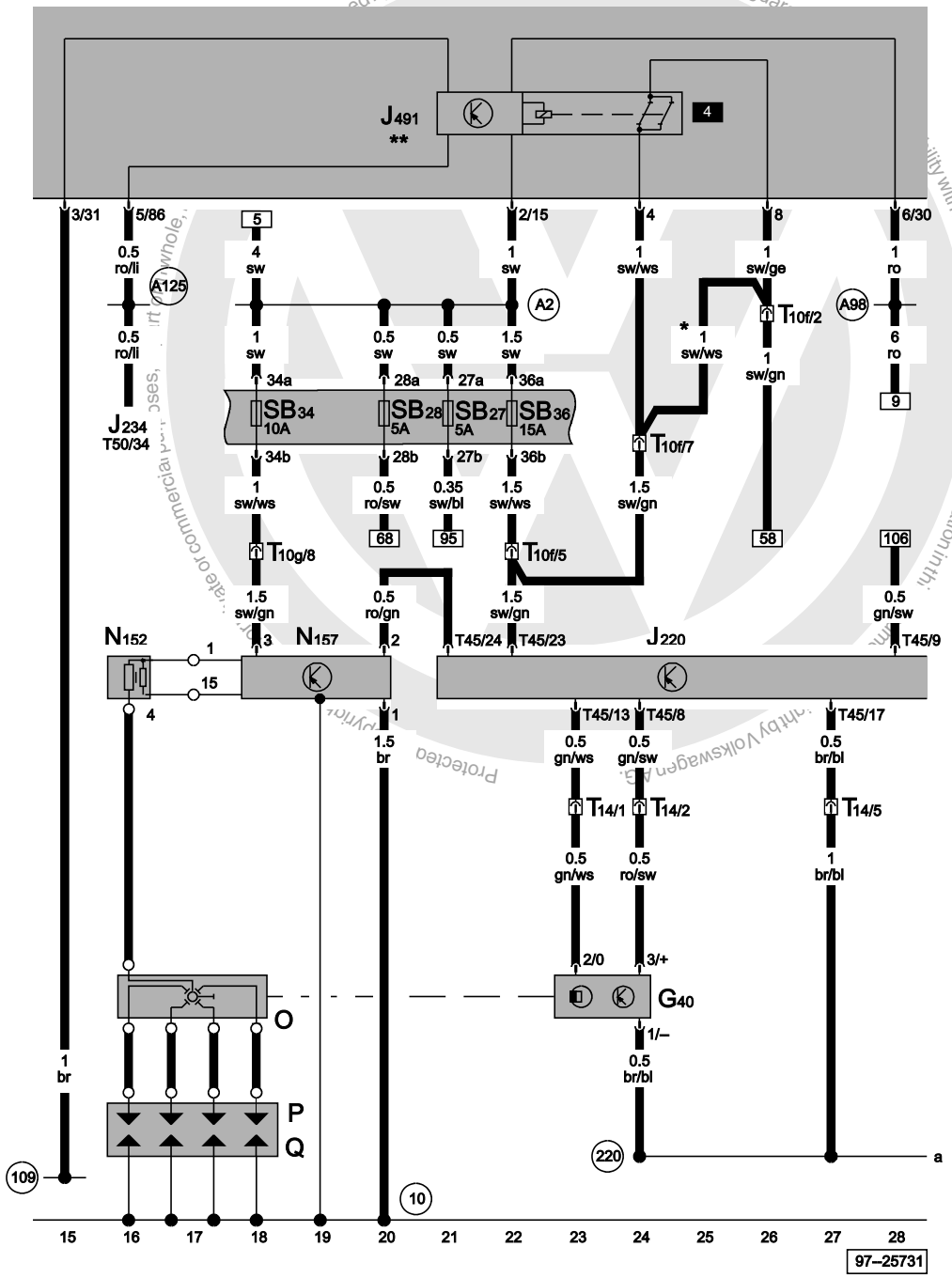

Motronic control unit, hall sender, ignition transformer, ignition transformer output stage, ignition distributor, spark plug connector, spark plugs, fuel shut-off control unit (crash)

G40	Hall sender
J220	Motronic control unit
J234	Airbag control unit
J491	Fuel shut-off control unit (crash)
N152	Ignition transformer
N157	Ignition transformer output stage
O	Ignition distributor
P	Spark plug connector
Q	Spark plugs
SB27	Fuse -27- on fuse box
SB28	Fuse -28- on fuse box
SB34	Fuse -34- on fuse box
SB36	Fuse -36- on fuse box
T10f	10-pin connector, purple, in protective housing for connectors
T10g	10-pin connector, red, in protective housing for connectors
T14	14-pin connector, in engine
T45	45-pin connector
T50	50-pin connector
10	Earth point, in plenum chamber
109	Earth connection, in airbag wiring harness
220	Earth connection (sender earth), in engine wiring harness
A2	Positive (+) connection (15), in dash panel wiring harness
A98	Positive (+) connection -4- (30), in dash panel wiring harness
A125	Connection (crash signal), in dash panel wiring harness
*	Does not apply to airbag
**	Only models with airbag

ws	=	white
sw	=	black
ro	=	red
br	=	brown
gn	=	green
bl	=	blue
gr	=	grey
li	=	purple
ge	=	yellow
or	=	orange
rs	=	pink

satelettronica

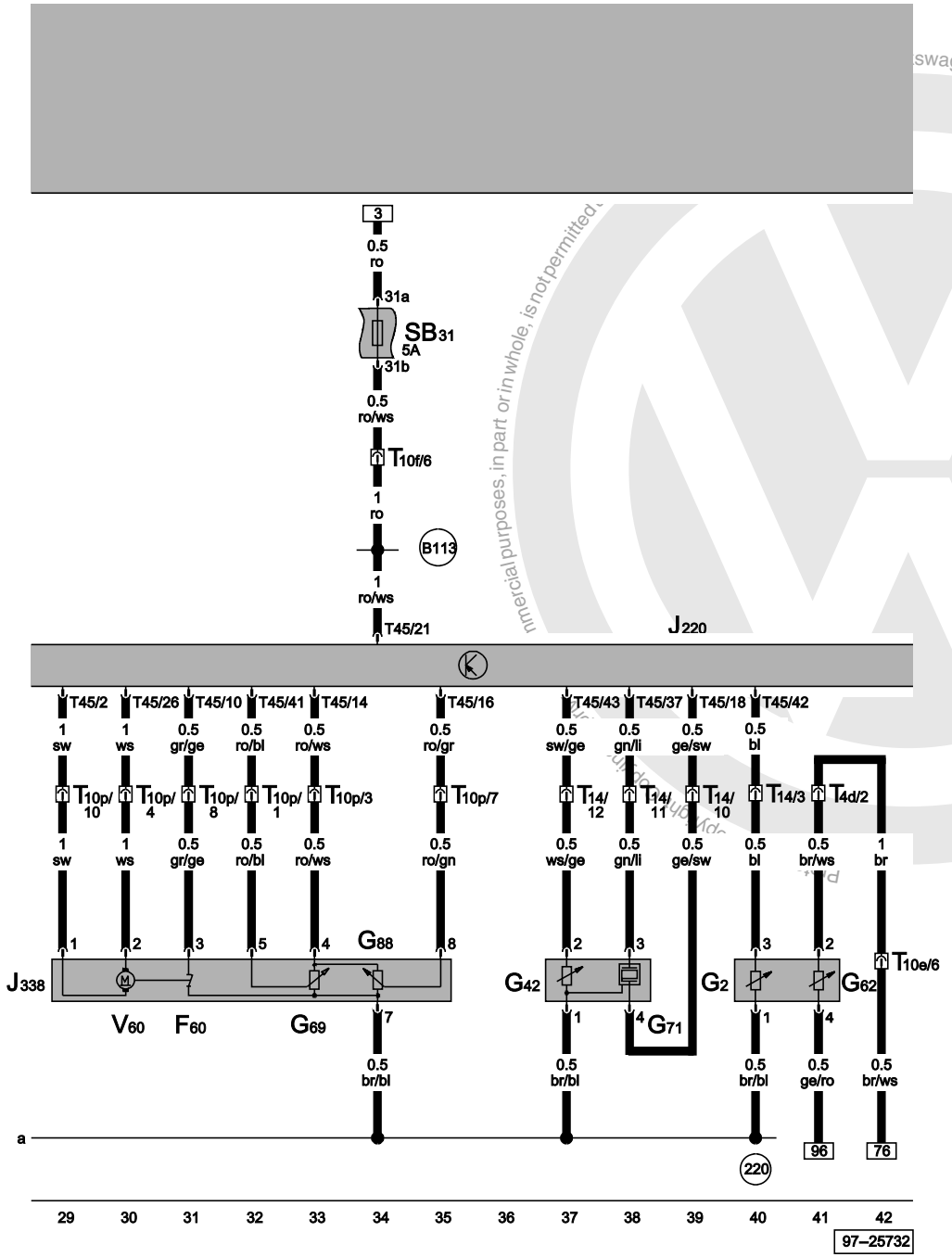

Motronic control unit, throttle valve control unit, throttle valve positioner, idling switch, coolant temperature sender, intake air temperature sender, intake manifold pressure sender

F60	Idling switch
G2	Coolant temperature sender
G42	Intake air temperature sender
G62	Coolant temperature sender
G69	Throttle valve potentiometer
G71	Intake manifold pressure sender
G88	Throttle valve positioner potentiometer
J220	Motronic control unit
J338	Throttle valve control unit
SB31	Fuse -31- on fuse box
T4d	4-pin connector, in engine
T10e	10-pin connector, green, in protective housing for connectors
T10f	10-pin connector, purple, in protective housing for connectors
T10p	10-pin connector, in engine
T14	14-pin connector, in engine
T45	45-pin connector
V60	Throttle valve positioner
220	Earth connection (sender earth), in engine wiring harness
B113	Positive (+) connection (30a), in left interior wiring harness

ws	=	white
sw	=	black
ro	=	red
br	=	brown
gn	=	green
bl	=	blue
gr	=	grey
li	=	purple
ge	=	yellow
or	=	orange
rs	=	pink

Volkswagen AG does not guarantee or accept any liability with respect to the correctness of information in this document. Copyright by Volkswagen AG. Commercial purposes, in part or in whole, is not permitted.
satelettronica

Motronic control unit, knock sensor 1, injector cylinder 1, injector cylinder 2, injector cylinder 3, injector cylinder 4

G61	Knock sensor I
J220	Motronic control unit
J362	Immobilizer control unit
N30	Injector, cylinder 1
N31	Injector, cylinder 2
N32	Injector, cylinder 3
N33	Injector, cylinder 4
T2a	2-pin connector, in engine
T4d	4-pin connector, in engine
T10c	10-pin connector, brown, in protective housing for connectors
T10p	10-pin connector, in engine
T10x	10-pin connector
T14	14-pin connector, in engine
T45	45-pin connector
10	Earth point, in plenum chamber
D95	Connection (injectors), in engine compartment wiring harness

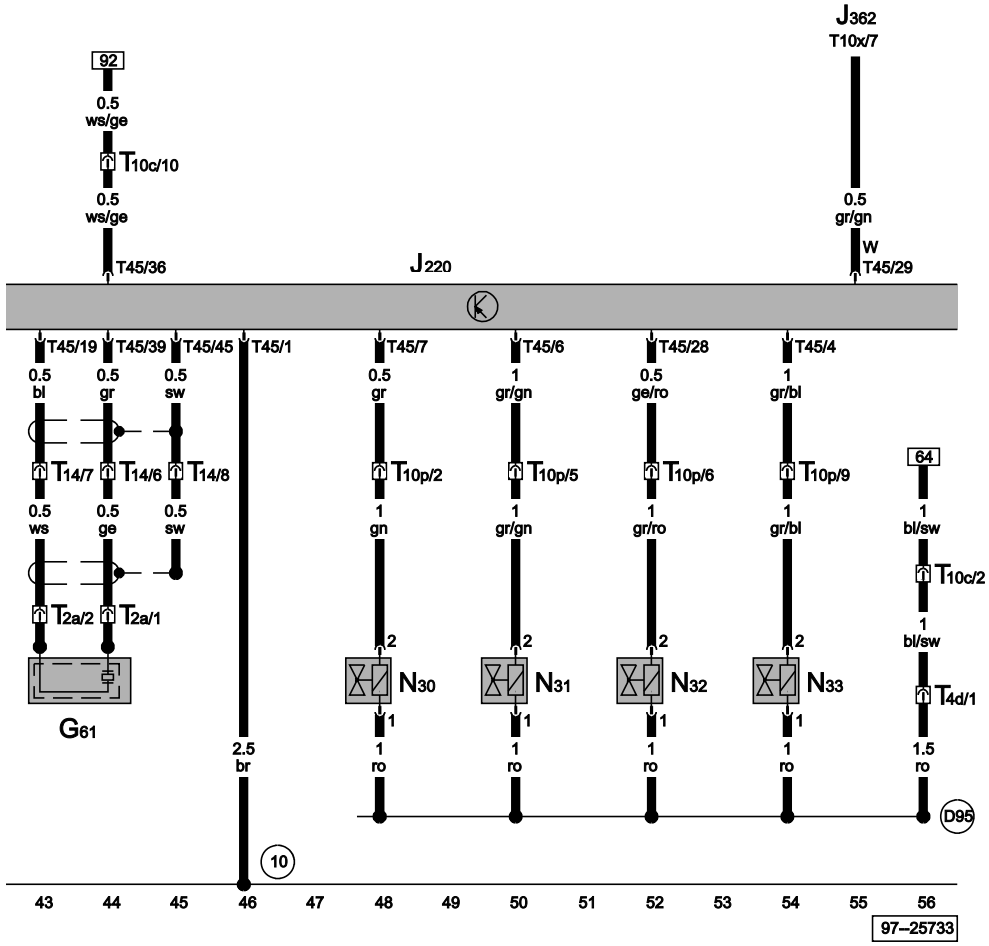

ws	=	white
sw	=	black
ro	=	red
br	=	brown
gn	=	green
bl	=	blue
gr	=	grey
li	=	purple
ge	=	yellow
or	=	orange
rs	=	pink

Protected by copyright. Copying for private or commercial purposes, in part or in whole, is not permitted unless authorised by Volkswagen AG. Volkswagen AG does not guarantee or accept any liability with respect to the correctness of information in this document. Copyright by Volkswagen AG.
satelettronica

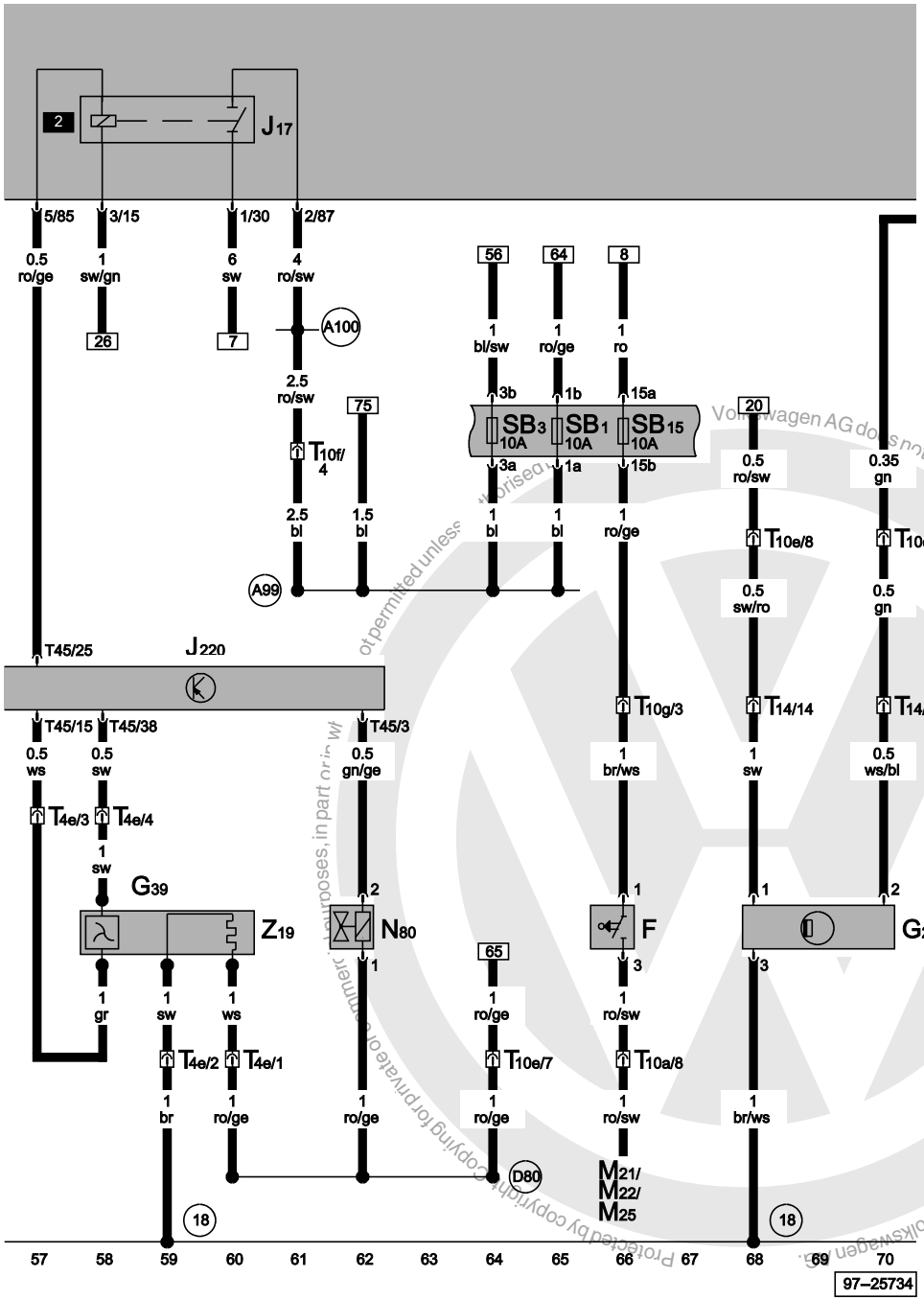

Motronic control unit, brake light switch, speedometer sender (hall sender, on gearbox), lambda probe, activated charcoal filter system solenoid valve 1 (pulsed), lambda probe heater, fuel pump relay

F	Brake light switch
G22	Speedometer sender (Hall sender, on gearbox)
G39	Lambda probe
J17	Fuel pump relay
J220	Motronic control unit
M21	Brake and tail light bulb, left
M22	Brake and tail light bulb, right
M25	High level brake light bulb
N80	Activated charcoal filter system solenoid valve 1 (pulsed)
SB1	Fuse -1- on fuse box
SB3	Fuse -3- on fuse box
SB15	Fuse -15- on fuse box
T4e	4-pin connector, in engine
T10a	10-pin connector, black, in protective housing for connectors
T10c	10-pin connector, brown, in protective housing for connectors
T10e	10-pin connector, green, in protective housing for connectors
T10f	10-pin connector, purple, in protective housing for connectors
T10g	10-pin connector, red, in protective housing for connectors
T14	14-pin connector, in engine
T45	45-pin connector
Z19	Lambda probe heater
18	Earth point, on engine block
A99	Connection -1- (87), in dash panel wiring harness
A100	Connection -2- (87), in dash panel wiring harness
D80	Positive (+) connection (87a - for active. charcoal filter system solenoid), in engine compartment wiring harness

ws	=	white
sw	=	black
ro	=	red
br	=	brown
gn	=	green
bl	=	blue
gr	=	grey
li	=	purple
ge	=	yellow
or	=	orange
rs	=	pink

satelettronica

Volkswagen AG does not guarantee or accept any liability with respect to the correctness of information in this document. Copyright by Volkswagen AG. Protected by copyright. Copying for private or commercial purposes, in part or in whole, is not permitted unless authorised by Volkswagen AG.

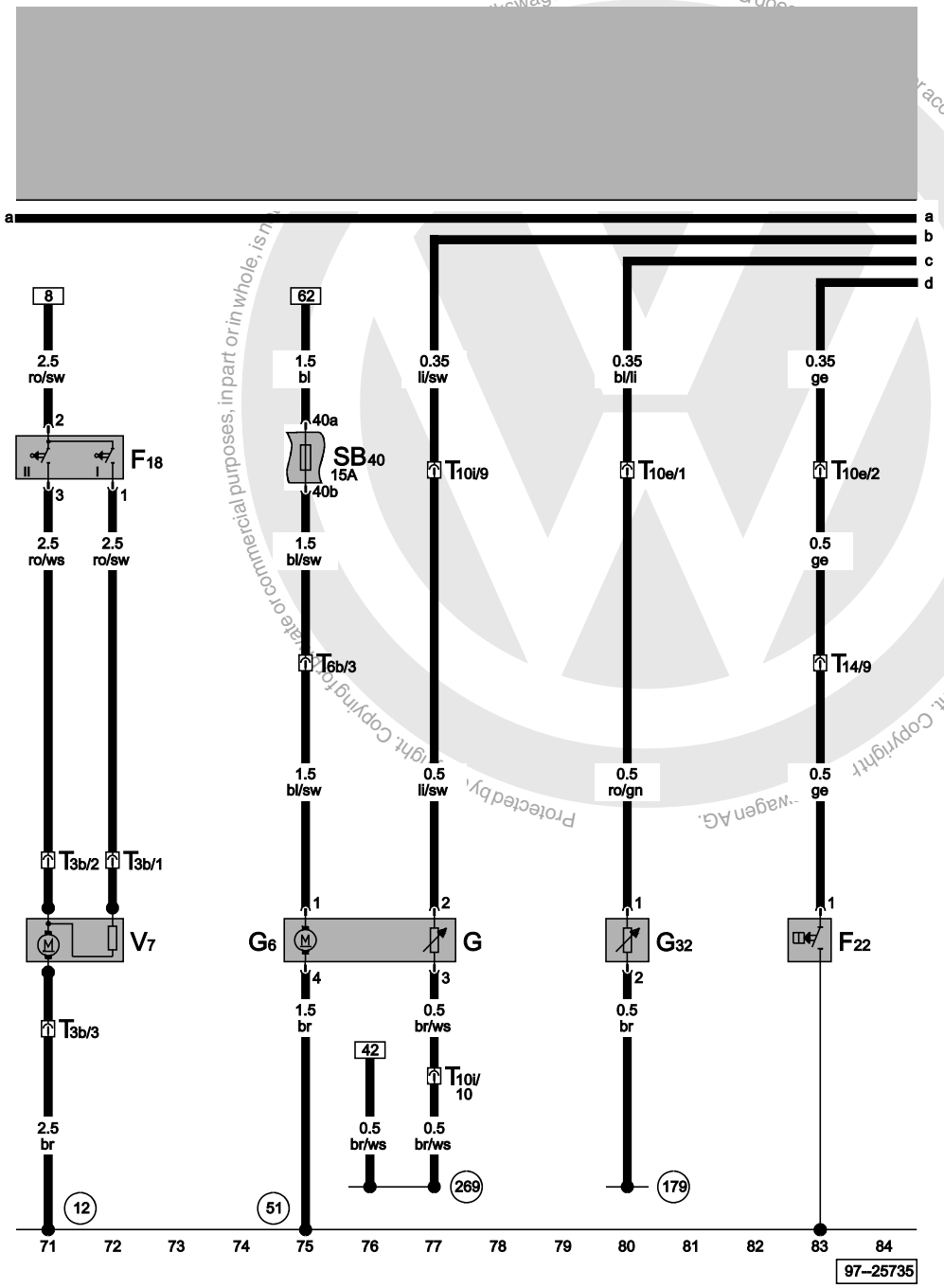

Radiator fan thermo-switch, oil pressure switch (0.3 bar), fuel gauge sender, fuel pump (pre-supply pump), coolant shortage indicator sender

F18	Radiator fan thermo-switch
F22	Oil pressure switch (0.3 bar)
G	Fuel gauge sender
G6	Fuel pump (pre-supply pump)
G32	Coolant shortage indicator sender
SB40	Fuse -40- on fuse box
T3b	3-pin connector, in engine compartment, front left
T6b	6-pin connector, grey, in protective housing for connectors
T10e	10-pin connector, green, in protective housing for connectors
T10i	10-pin connector, orange, in protective housing for connectors
T14	14-pin connector, in engine
V7	Radiator fan
12	Earth point, in engine compartment, left
51	Earth point, in right luggage compartment
179	Earth connection, in left headlight wiring harness
269	Earth connection (sender earth) -1-, in dash panel wiring harness

ws	=	white
sw	=	black
ro	=	red
br	=	brown
gn	=	green
bl	=	blue
gr	=	grey
li	=	purple
ge	=	yellow
or	=	orange
rs	=	pink

satelettronica

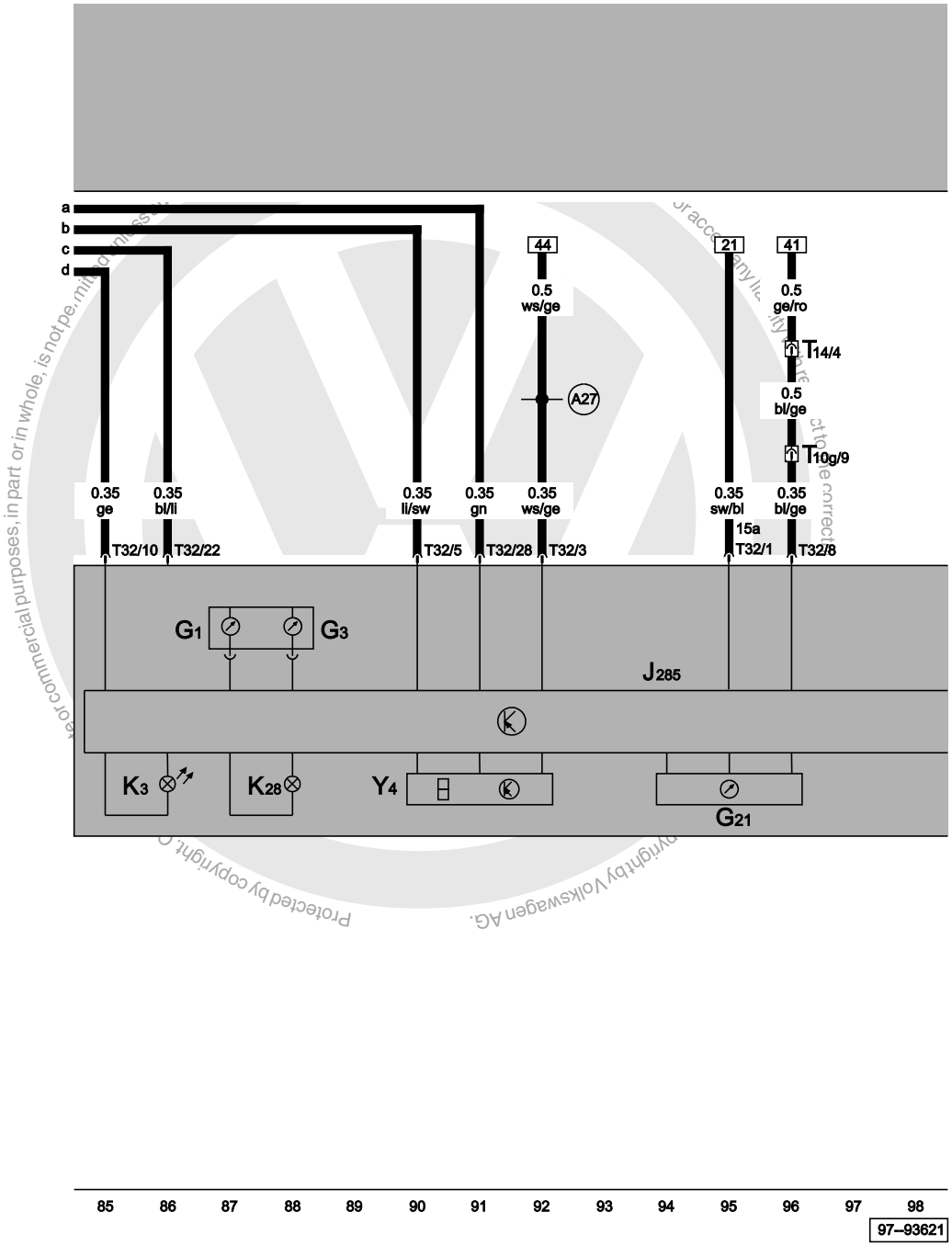

Control unit with display in dash panel insert, fuel gauge, coolant temperature gauge, speedometer, oil pressure warning lamp, coolant temperature/coolant shortage warning lamp

G1	Fuel gauge
G3	Coolant temperature gauge
G21	Speedometer
J285	Control unit with display in dash panel insert
K3	Oil pressure warning lamp
K28	Coolant temperature/coolant shortage warning lamp
T10g	10-pin connector, red, in protective housing for connectors
T14	14-pin connector, in engine
T32	32-pin connector, blue
Y4	Odometer display
A27	Connection (speed signal), in dash panel wiring harness

ws	=	white
sw	=	black
ro	=	red
br	=	brown
gn	=	green
bl	=	blue
gr	=	grey
li	=	purple
ge	=	yellow
or	=	orange
rs	=	pink

satelettronica

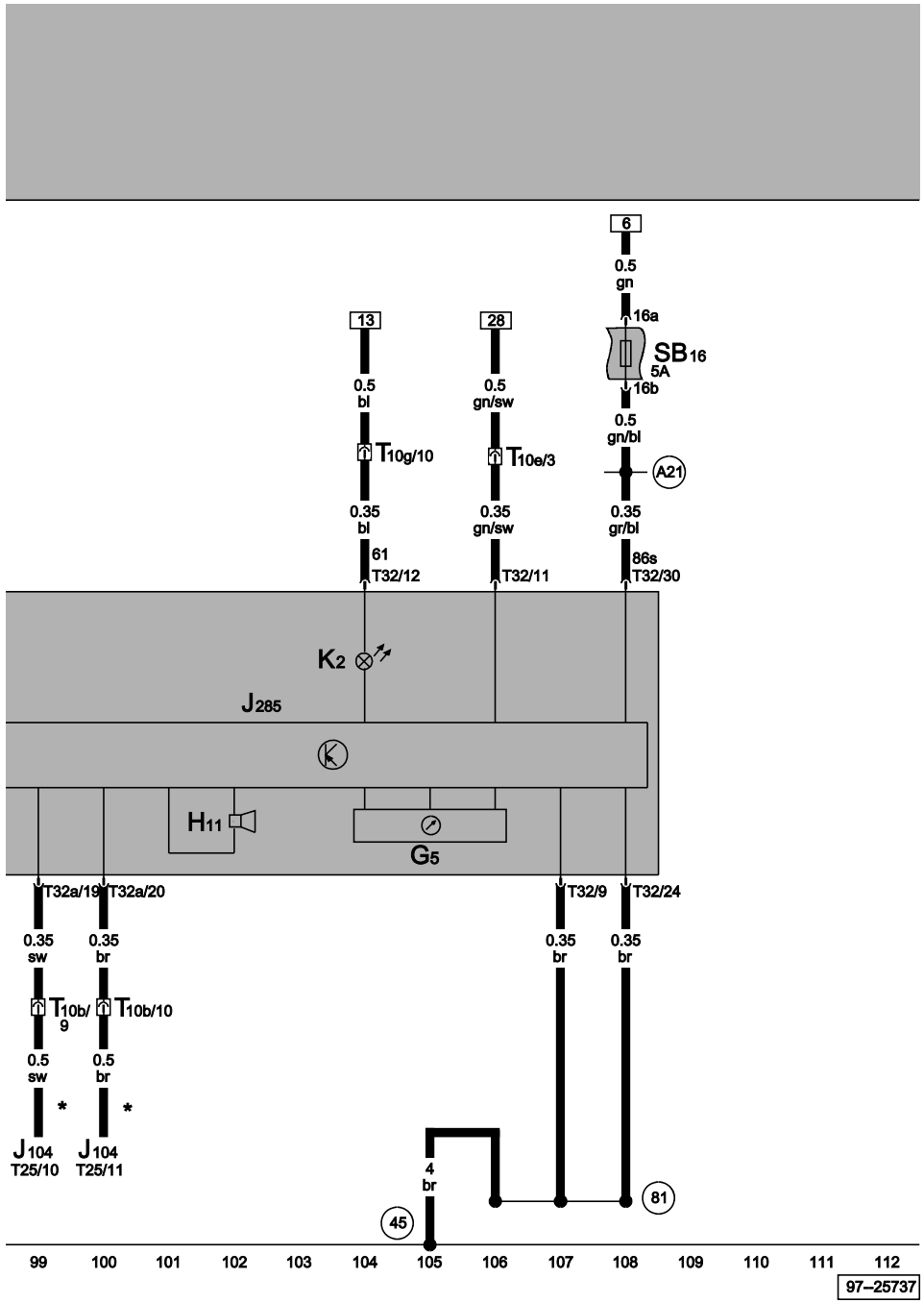

Control unit with display in dash panel insert, rev. counter, oil pressure warning buzzer, alternator warning lamp

G5	Rev. counter
H11	Oil pressure warning buzzer
J104	ABS with EDL control unit
J285	Control unit with display in dash panel insert
K2	Alternator warning lamp
SB16	Fuse -16- on fuse box
T10b	10-pin connector, white, in protective housing for connectors
T10e	10-pin connector, green, in protective housing for connectors
T10g	10-pin connector, red, in protective housing for connectors
T25	25-pin connector
T32	32-pin connector, blue
45	Earth point, behind dash panel - centre
81	Earth connection -1-, in dash panel wiring harness
A21	Connection (86s), in dash panel wiring harness
*	Data wire

ws	=	white
sw	=	black
ro	=	red
br	=	brown
gn	=	green
bl	=	blue
gr	=	grey
li	=	purple
ge	=	yellow
or	=	orange
rs	=	pink

Protected by copyright. Copying for private or commercial purposes, in part or in whole, is not permitted unless authorised by Volkswagen AG. Volkswagen AG does not warrant or accept any liability with respect to the correctness of information in this document. Copyright by Volkswagen AG.
satelettronica

1.6 l Simos/74 kW, engine codes APF

From October 1999

For alternatives to relay and fuse positions as well as multi-pin connector wiring - see "Fitting locations" section.

Relay locations on relay plate:

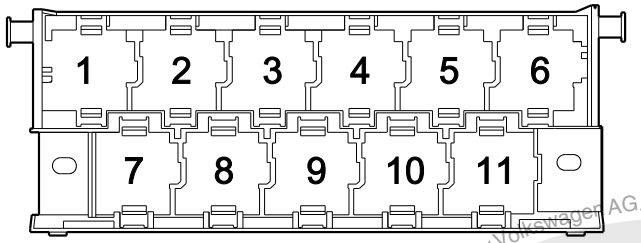

97--25507

2 - Fuel pump relay (167)
4 - Fuel shut-off control unit (405)
5 - Secondary air pump relay (100)
6 - X contact relief relay (100)
7 - Current supply relay for Simos control unit

Note:

- *The number in brackets behind the part designation denotes the control number on the housing.*

Fuse colours

30 A - green
25 A - white
20 A - yellow
15 A - blue
10 A - red
7.5 A - brown
5 A - beige
3 A - purple

Protected by copyright. Copying for private or commercial purposes, in part or in whole, is not permitted unless authorised by Volkswagen AG. Volkswagen AG does not guarantee or accept any liability with respect to the correctness of information in this document. Copyright by Volkswagen AG.

satelettronica

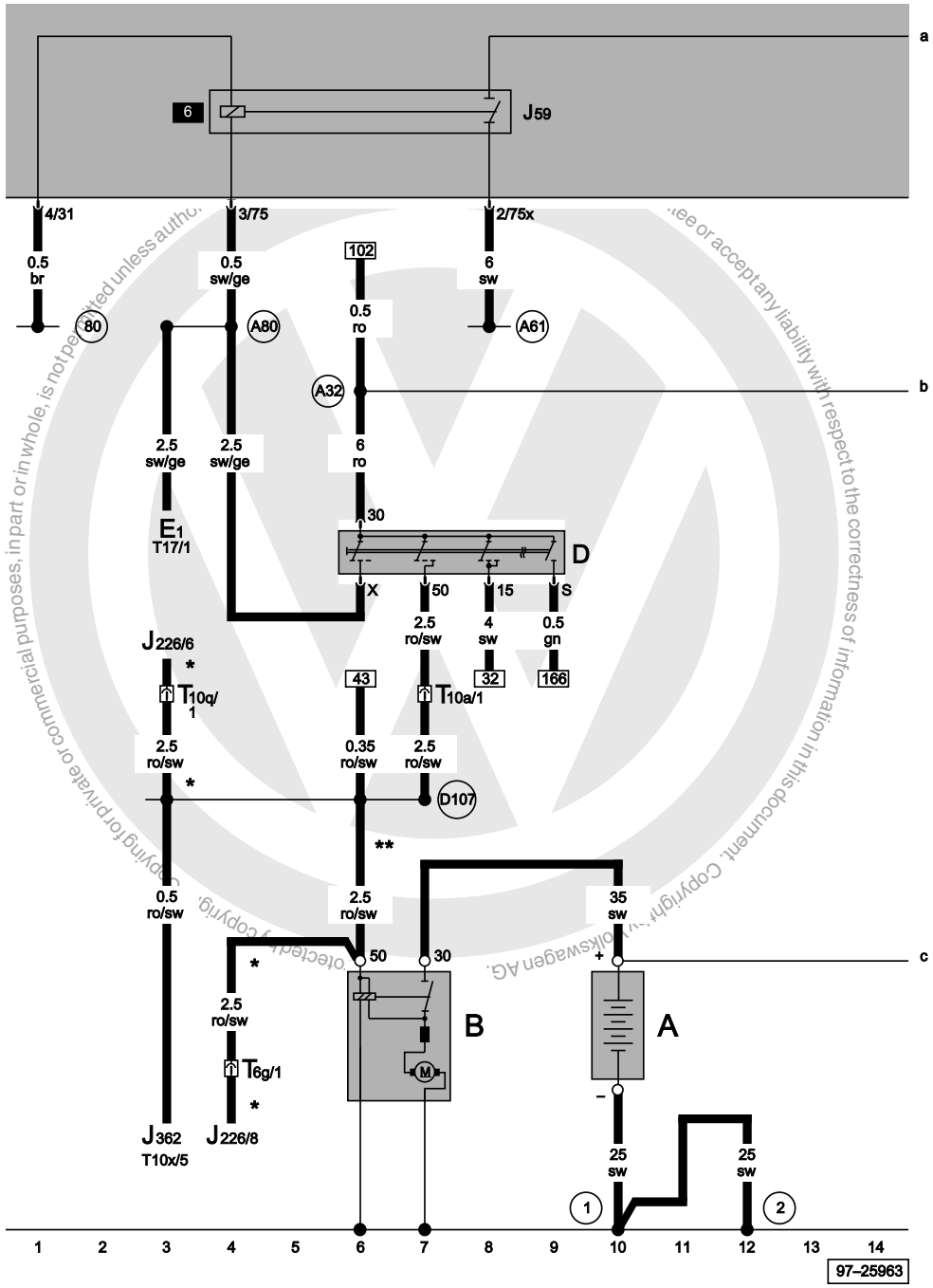

Battery, starter, ignition/starter switch, X contact relief relay

A	Battery
B	Starter
D	Ignition/starter switch
E1	Lighting switch
J59	X contact relief relay
J226	Starter inhibitor and reversing light relay
J362	Immobilizer control unit
T6g	6-pin connector, black, in protective housing for connectors
T10a	10-pin connector, black, in protective housing for connectors
T10q	10-pin connector, blue, in protective housing for connectors
T10x	10-pin connector
T17	17-pin connector
1	Earth strap, battery - body
2	Earth strap, gearbox - body
80	Earth connection -1-, in instruments wiring harness
A32	Positive (+) connection (30), in dash panel wiring harness
A61	Positive (+) connection (X), in instruments wiring harness
A80	Connection -1- (X), in dash panel wiring harness
D107	Connection -5-, in engine compartment wiring harness
*	Only models with automatic gearbox
**	Only models with manual gearbox

ws	=	white
sw	=	black
ro	=	red
br	=	brown
gn	=	green
bl	=	blue
gr	=	grey
li	=	purple
ge	=	yellow
or	=	orange
rs	=	pink

satelettronica

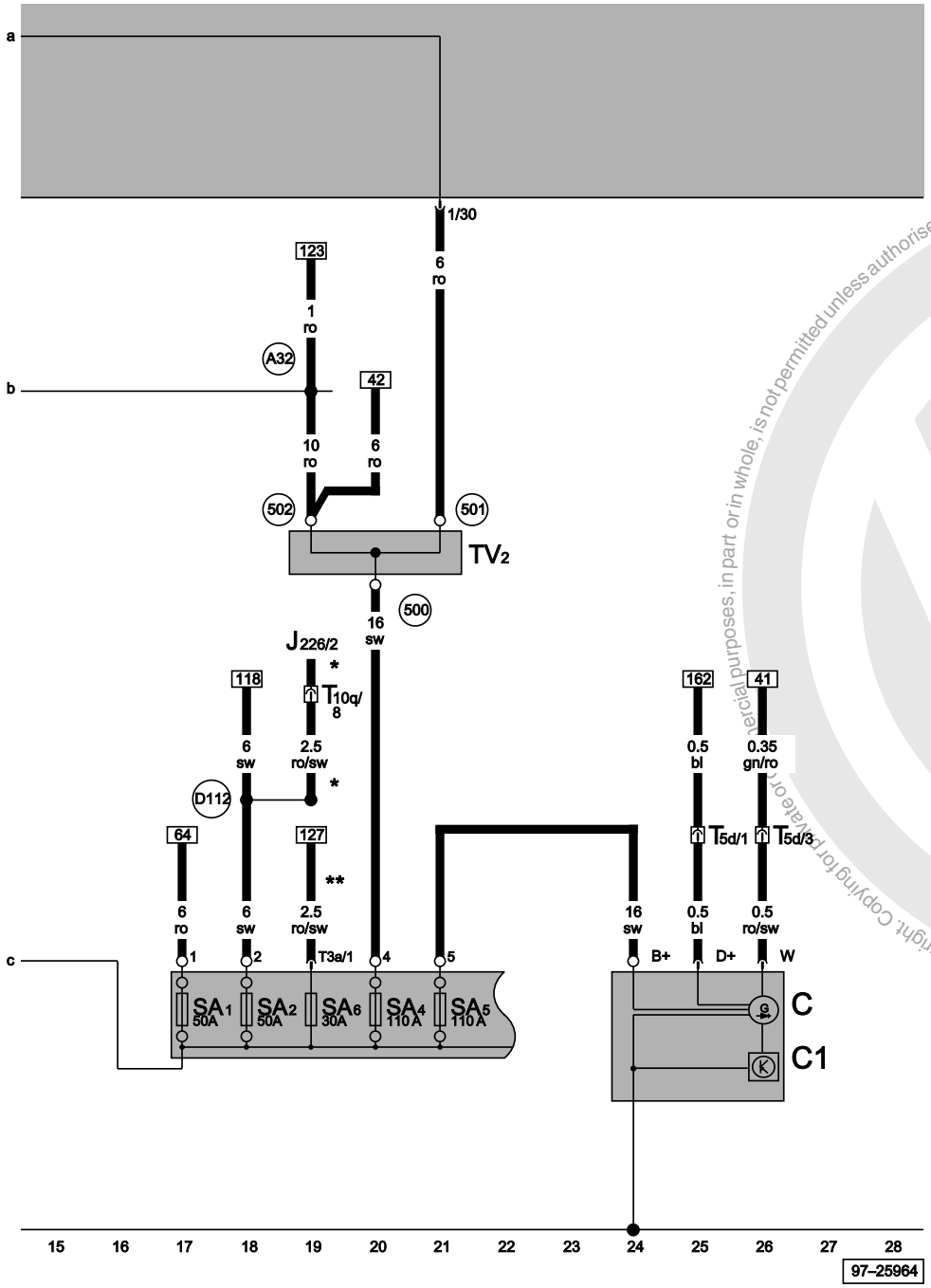

Alternator, voltage regulator, terminal 30 junction box

C	Alternator
C1	Voltage regulator
J226	Starter inhibitor and reversing light relay
SA1	Fuse -1- on battery fuse box
SA2	Fuse -2- on battery fuse box
SA4	Fuse -4- on battery fuse box
SA5	Fuse -5- on battery fuse box
SA6	Fuse -6- on battery fuse box
TV2	Terminal 30 junction box
T3a	3-pin connector, in battery
T5d	5-pin connector, in engine, near gearbox
T10q	10-pin connector, blue, in protective housing for connectors
500	Screw connection -1- (30), on relay plate
501	Screw connection -2- (30), on relay plate
502	Screw connection -1- (30a), on relay plate
A32	Positive (+) connection (30), in dash panel wiring harness
D112	Connection -10-, in engine compartment wiring harness
*	Only models with automatic gearbox
**	Only models with manual gearbox

ws	=	white
sw	=	black
ro	=	red
br	=	brown
gn	=	green
bl	=	blue
gr	=	grey
li	=	purple
ge	=	yellow
or	=	orange
rs	=	pink

Protected by copyright. Copying for private or commercial purposes, in part or in whole, is not permitted unless authorised by Volkswagen AG. Volkswagen AG does not guarantee or assume any liability with respect to the correctness of information in this document. Copyright by Volkswagen AG.

satelettronica

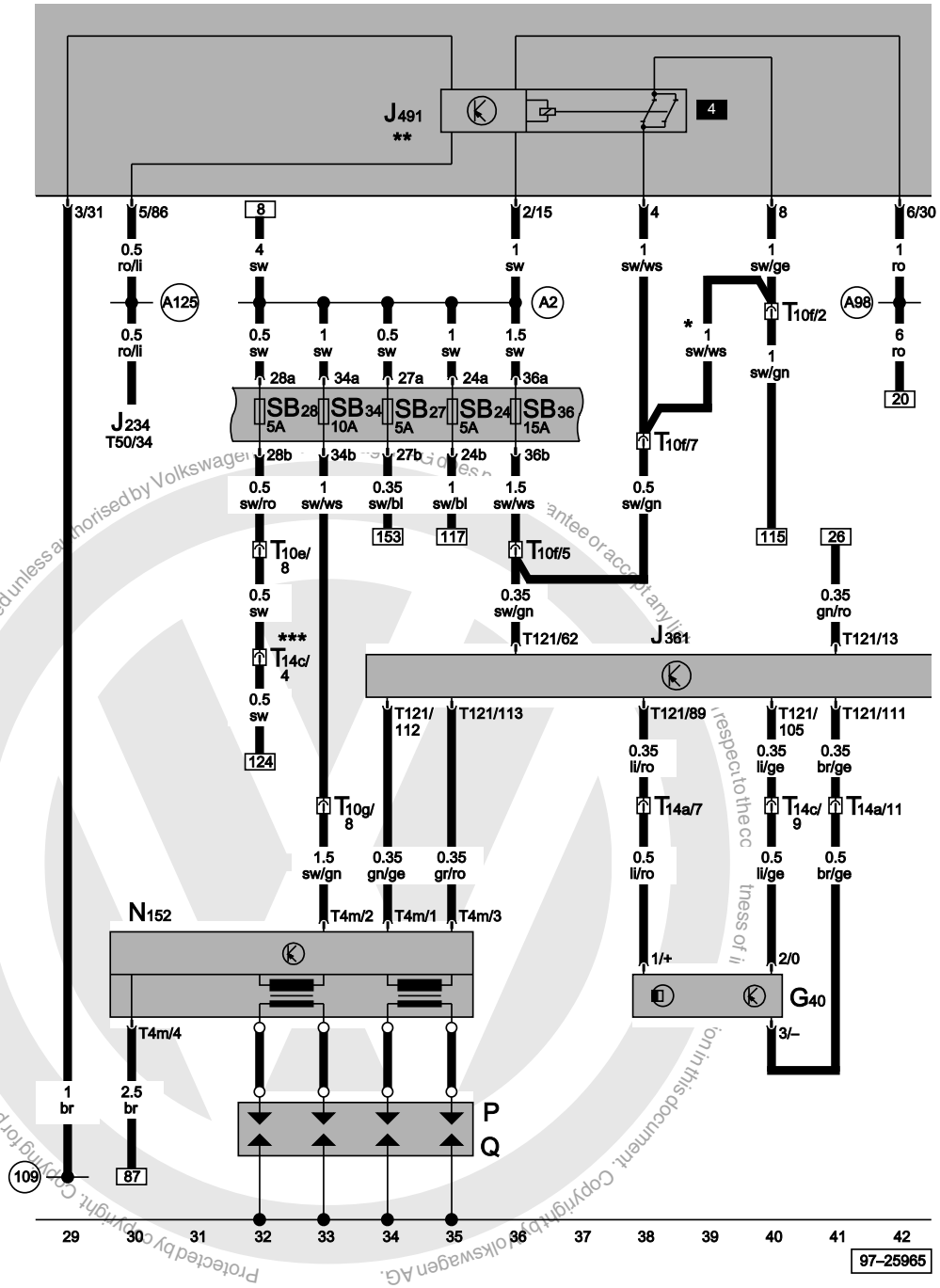

Simos control unit, hall sender, ignition transformer, spark plug connector, spark plugs, fuel shut- off control unit (crash)

G40	Hall sender
J234	Airbag control unit
J361	Simos control unit
J491	Fuel shut-off control unit (crash)
N152	Ignition transformer
P	Spark plug connector
Q	Spark plugs
SB24	Fuse -24- on fuse box
SB27	Fuse -27- on fuse box
SB28	Fuse -28- on fuse box
SB34	Fuse -34- on fuse box
SB36	Fuse -36- on fuse box
T4m	4-pin connector, yellow, in ignition transformer
T10e	10-pin connector, green, in protective housing for connectors
T10f	10-pin connector, purple, in protective housing for connectors
T10g	10-pin connector, red, in protective housing for connectors
T14a	14-pin connector, in engine
T14c	14-pin connector, in engine
T50	50-pin connector
T121	121-pin connector
109	Earth connection, in airbag wiring harness
A2	Positive (+) connection (15), in dash panel wiring harness
A98	Positive (+) connection -4- (30), in dash panel wiring harness
A125	Connection (crash signal), in dash panel wiring harness
*	Does not apply to airbag
**	Only models with airbag
***	Connector T14c, only models with automatic gearbox

ws	=	white
sw	=	black
ro	=	red
br	=	brown
gn	=	green
bl	=	blue
gr	=	grey
li = purple
ge = yellow
or = orange
rs = pink

Protected by copyright. Copying for private or commercial purposes, in part or in whole, is not permitted unless authorised by Volkswagen AG. Copyright by Volkswagen AG.
satelettronica

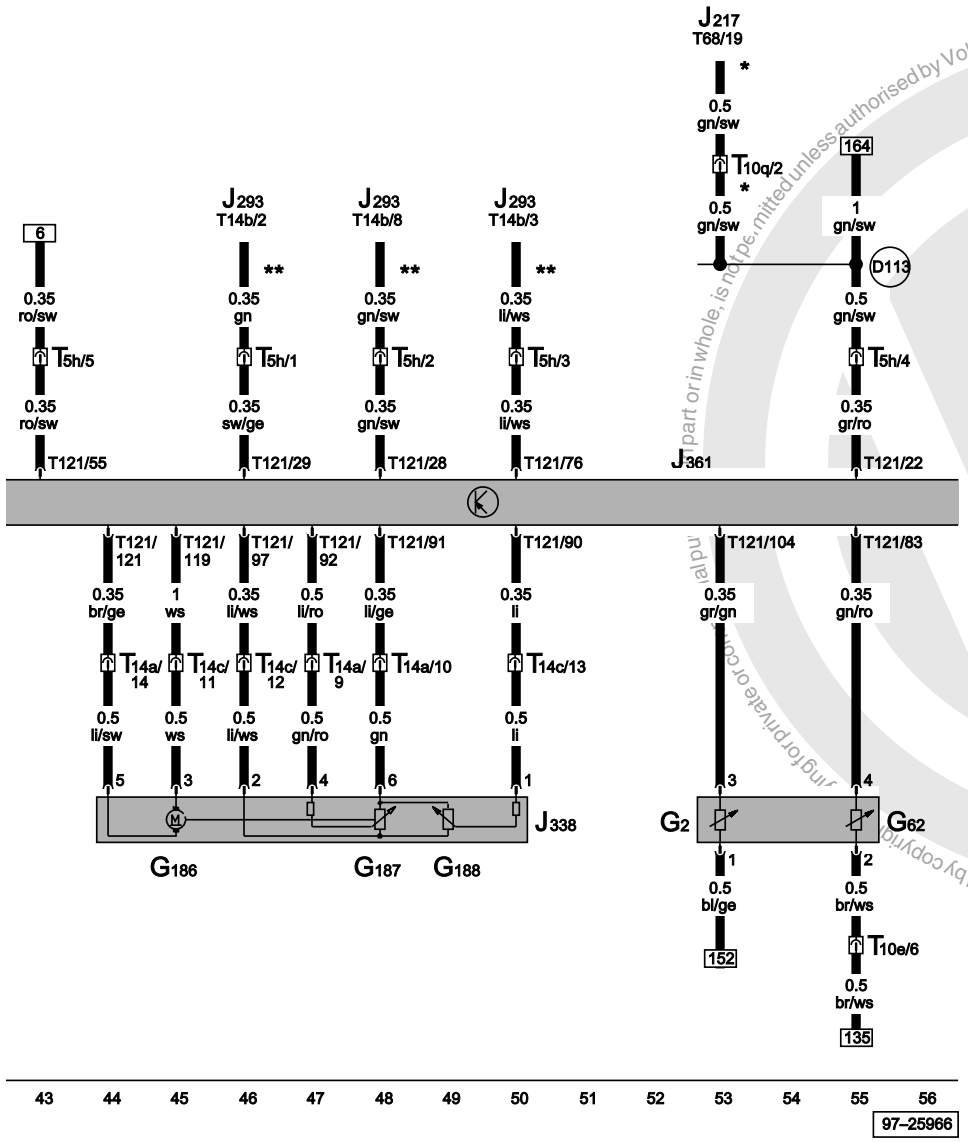

Simos control unit, throttle valve control unit, coolant temperature sender, throttle valve drive (electric throttle operation)

G2	Coolant temperature sender
G62	Coolant temperature sender
G186	Throttle valve drive (electric throttle operation)
G187	Throttle valve drive angle sender -1- (electric throttle operation)
G188	Throttle valve drive angle sender -2- (electric throttle operation)
J217	Automatic gearbox control unit
J293	Radiator fan control unit
J338	Throttle valve control unit
J361	Simos control unit
T5h	5-pin connector, brown, in protective housing for connectors
T10e	10-pin connector, green, in protective housing for connectors
T10q	10-pin connector, blue, in protective housing for connectors
T14a	14-pin connector, in engine
T14b	14-pin connector, in engine compartment, left
T14c	14-pin connector, in engine
T68	68-pin connector
T121	121-pin connector
D113	Connection -11-, in engine compartment wiring harness
*	Only models with automatic gearbox
**	Only models with air conditioner

ws	=	white
sw	=	black
ro	=	red
br	=	brown
gn	=	green
bl	=	blue
gr	=	grey
li	=	purple
ge	=	yellow
or	=	orange
rs	=	pink

Protected by copyright. Copying for private or commercial purposes, in part or in whole, is not permitted unless authorised by Volkswagen AG. Volkswagen AG does not guarantee or assume any liability with respect to the correctness of information in this document. Copyright by Volkswagen AG.

satelettronica

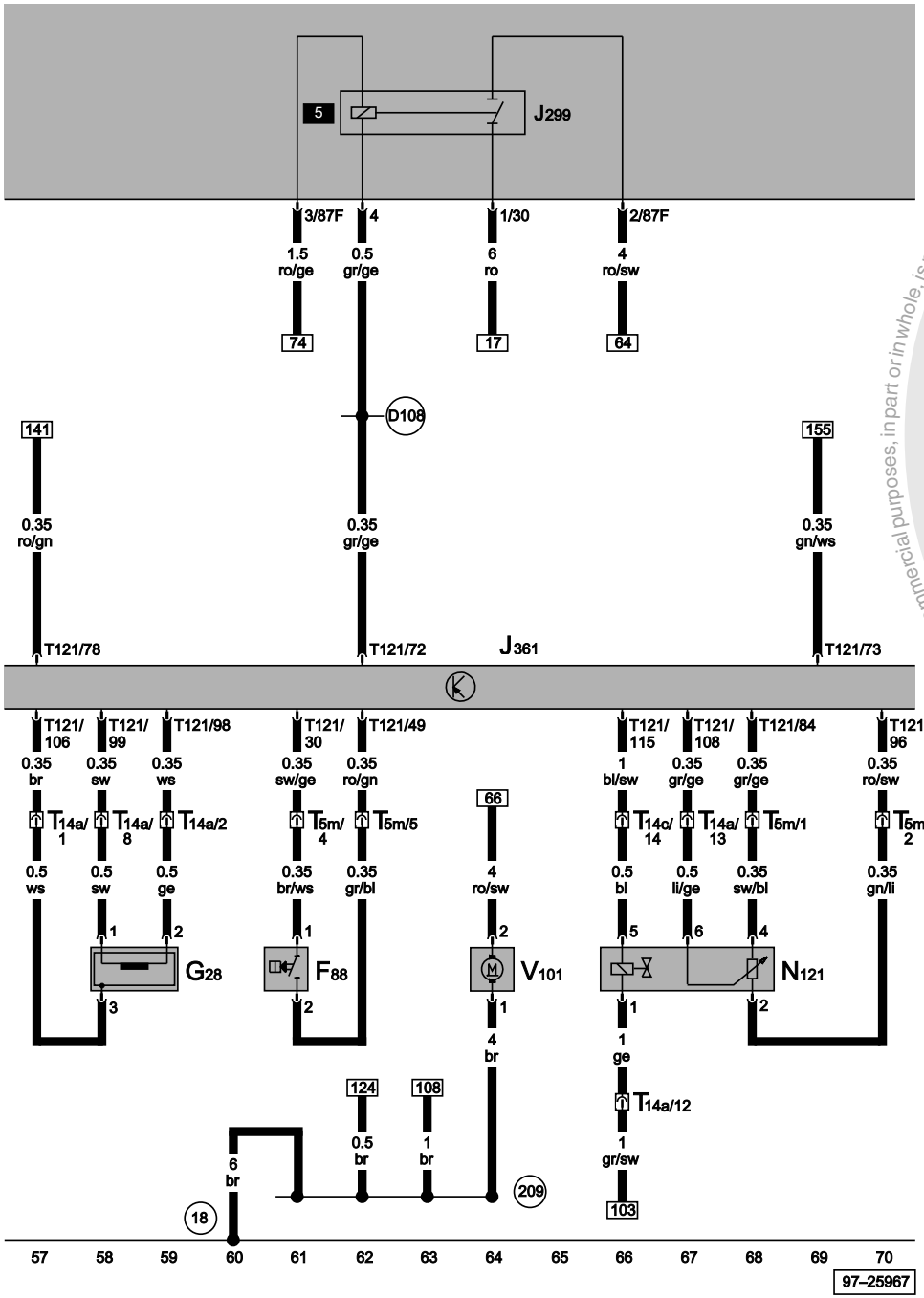

Simos control unit, power assisted steering pressure switch, engine speed sender, exhaust gas recirculation frequency valve, secondary air pump motor

F88	Power assisted steering pressure switch
G28	Engine speed sender
J299	Secondary air pump relay
J361	Simos control unit
N121	Exhaust gas recirculation frequency valve
T5m	5-pin connector, in engine
T14a	14-pin connector, in engine
T14c	14-pin connector, in engine
T121	121-pin connector
V101	Secondary air pump motor
18	Earth point, on engine block
209	Earth connection -6-, in engine compartment wiring harness
D108	Connection -6-, in engine compartment wiring harness

ws	=	white
sw	=	black
ro	=	red
br	=	brown
gn	=	green
bl	=	blue
gr	=	grey
li	=	purple
ge	=	yellow
or	=	orange
rs	=	pink

Protected by copyright. Copying for private or commercial purposes, in part or in whole, is not permitted unless authorised by Volkswagen AG. Volkswagen AG does not guarantee or accept any liability with respect to the correctness of information in this document. Copyright by Volkswagen AG.
satelettronica

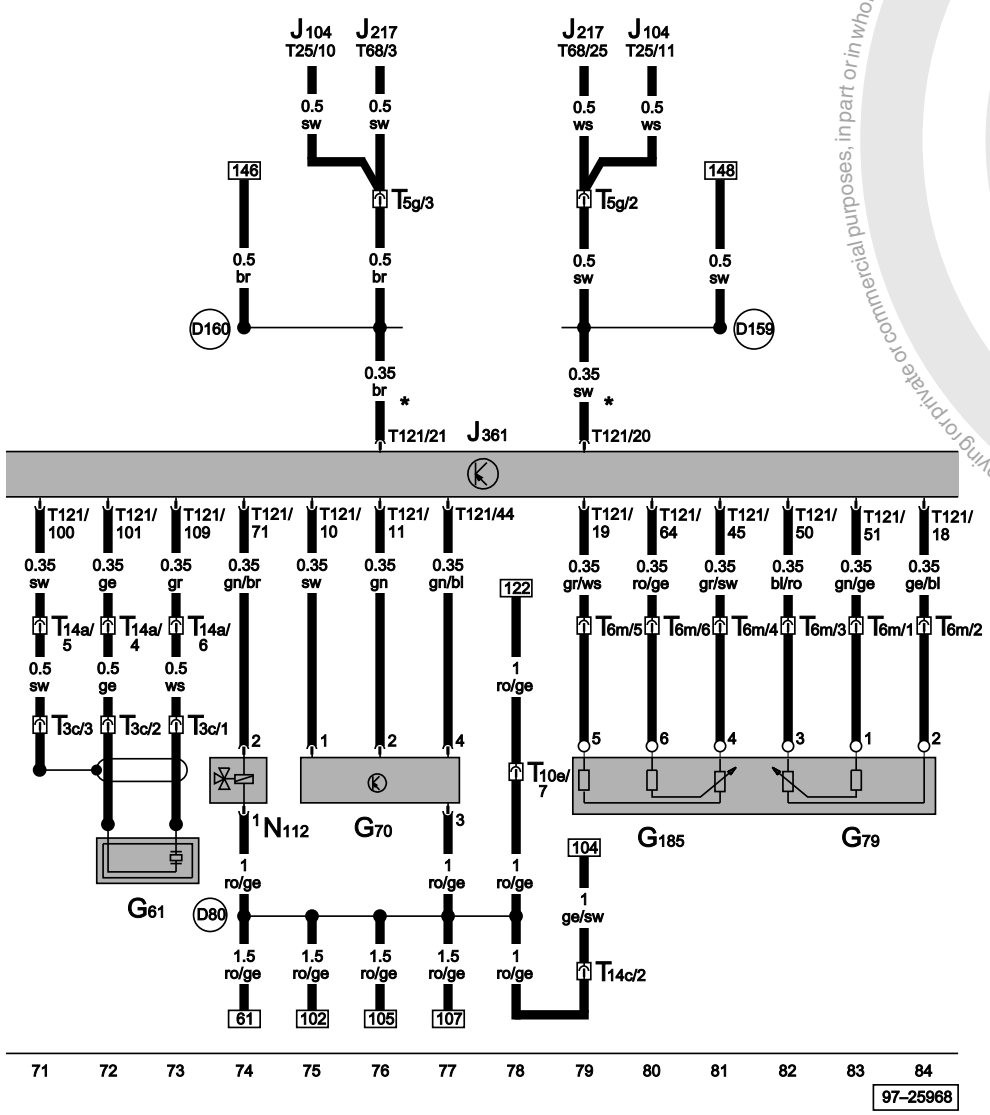

Simos control unit, knock sensor I, air mass meter, accelerator pedal position sender, secondary air inlet valve

G61	Knock sensor I
G70	Air mass meter
G79	Accelerator pedal position sender
G185	Accelerator pedal position sender -2-
J104	ABS with EDL control unit
J217	Automatic gearbox control unit
J361	Simos control unit
N112	Secondary air inlet valve
T3c	3-pin connector
T5g	5-pin connector, pink, in protective housing for connectors
T6m	6-pin connector
T10e	10-pin connector, green, in protective housing for connectors
T14a	14-pin connector, in engine
T14c	14-pin connector, in engine
T25	25-pin connector
T68	68-pin connector
T121	121-pin connector
D80	Positive (+) connection (87a - for active. charcoal filter system solenoid), in engine compartment wiring harness
D159	Positive (+) connection (high bus), in engine compartment wiring harness
D160	Positive (+) connection (low bus), in engine compartment wiring harness
*	Data wire

ws	=	white
sw	=	black
ro	=	red
br	=	brown
gn	=	green
bl	=	blue
gr	=	grey
li	=	purple
ge	=	yellow
or	=	orange
rs	=	pink

Protected by copyright. Copying or private or commercial purposes, in part or in whole, unless authorised by Volkswagen AG. Volkswagen AG does not guarantee or accept any liability with respect to the correctness of information in this document. Copyright by Volkswagen AG.
satelettronica

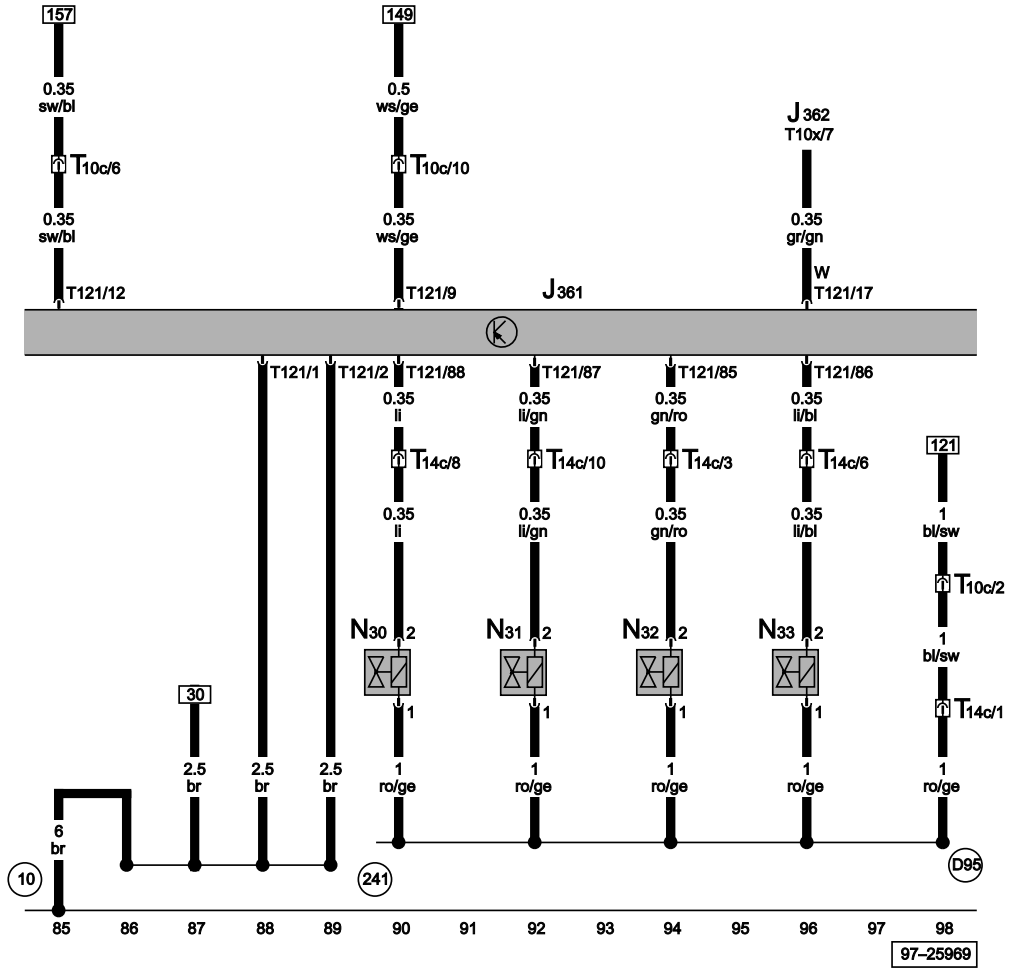

Simos control unit, injector cylinder 1

J361	Simos control unit
J362	Immobilizer control unit
N30	Injector, cylinder 1
N31	Injector, cylinder 2
N32	Injector, cylinder 3
N33	Injector, cylinder 4
T10c	10-pin connector, brown, in protective housing for connectors
T10x	10-pin connector
T14c	14-pin connector, in engine
T121	121-pin connector
10	Earth point, in plenum chamber
241	Earth connection -2-, engine earth, in engine wiring harness
D95	Connection (injectors), in engine compartment wiring harness

ws	=	white
sw	=	black
ro	=	red
br	=	brown
gn	=	green
bl	=	blue
gr	=	grey
li	=	purple
ge	=	yellow
or	=	orange
rs	=	pink

Protected by copyright. Copyright by Volkswagen AG. Volkswagen AG does not guarantee or accept any liability with respect to the correctness of information in this document. Copyright by Volkswagen AG. Copying for private or commercial purposes, in part or in whole, is not permitted unless authorised by Volkswagen AG.
satelettronica

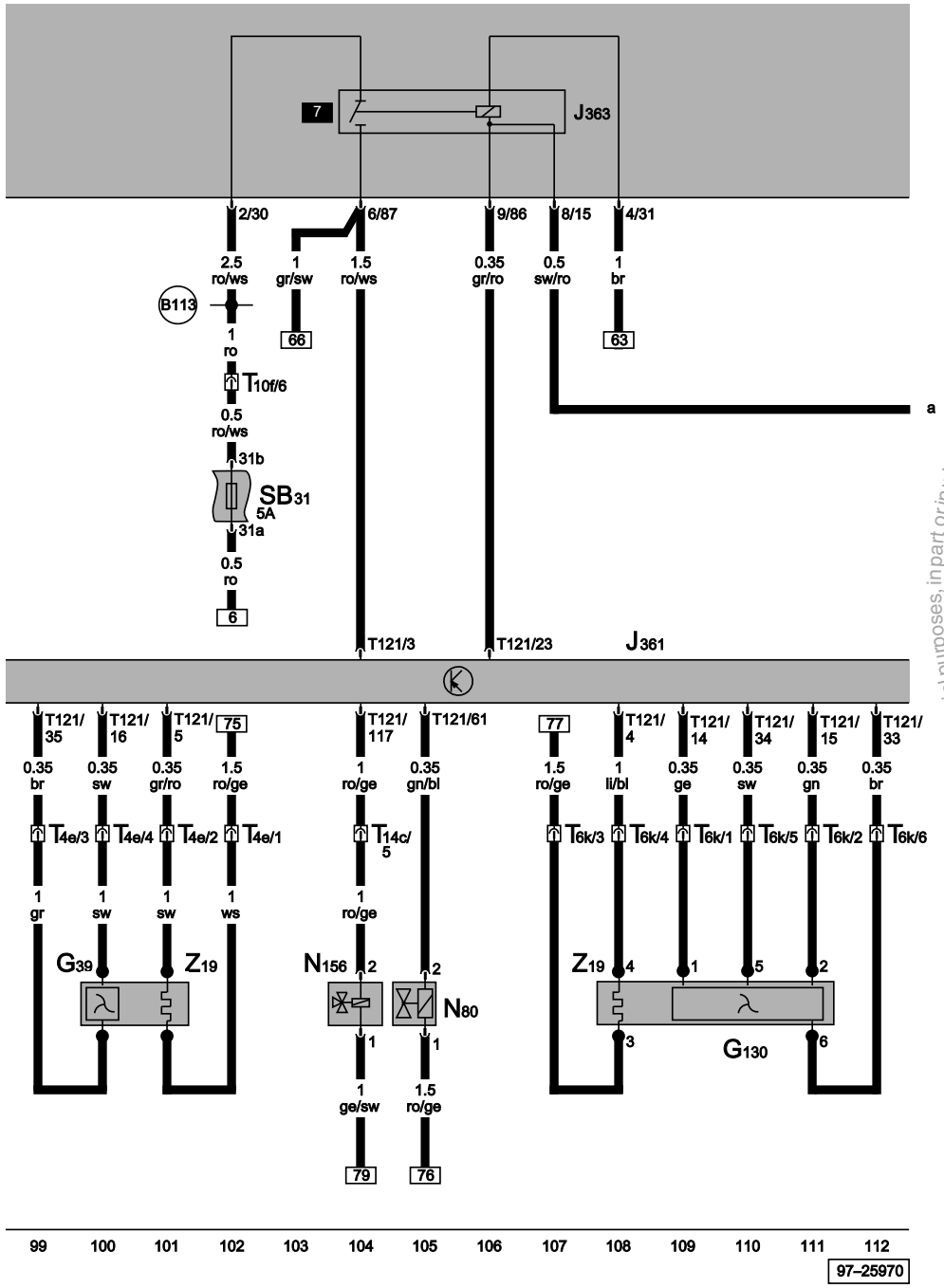

Simos control unit, lambda probe, lambda probe downstream of catalytic converter, lambda probe heater, activated charcoal filter system solenoid valve 1 (pulsed), intake manifold change-over valve, current supply relay for Simos control unit

G39	Lambda probe
G130	Lambda probe downstream of catalytic converter
J361	Simos control unit
J363	Current supply relay for Simos control unit
N80	Activated charcoal filter system solenoid valve 1 (pulsed)
N156	Intake manifold change-over valve
SB31	Fuse -31- on fuse box
T4e	4-pin connector, in engine
T6k	6-pin connector, in exhaust pipe
T10f	10-pin connector, purple, in protective housing for connectors
T14c	14-pin connector, in engine
T121	121-pin connector
Z19	Lambda probe heater
B113	Positive (+) connection (30a), in left interior wiring harness

Protected by copyright. Copying for private or commercial purposes, in part or in whole, is not permitted unless authorised by Volkswagen AG. Volkswagen AG does not guarantee or accept any liability with respect to the correctness of information in this document. Copyright by Volkswagen AG.

satelettronica

ws	=	white
sw	=	black
ro	=	red
br	=	brown
gn	=	green
bl	=	blue
gr	=	grey
li	=	purple
ge	=	yellow
or	=	orange
rs	=	pink

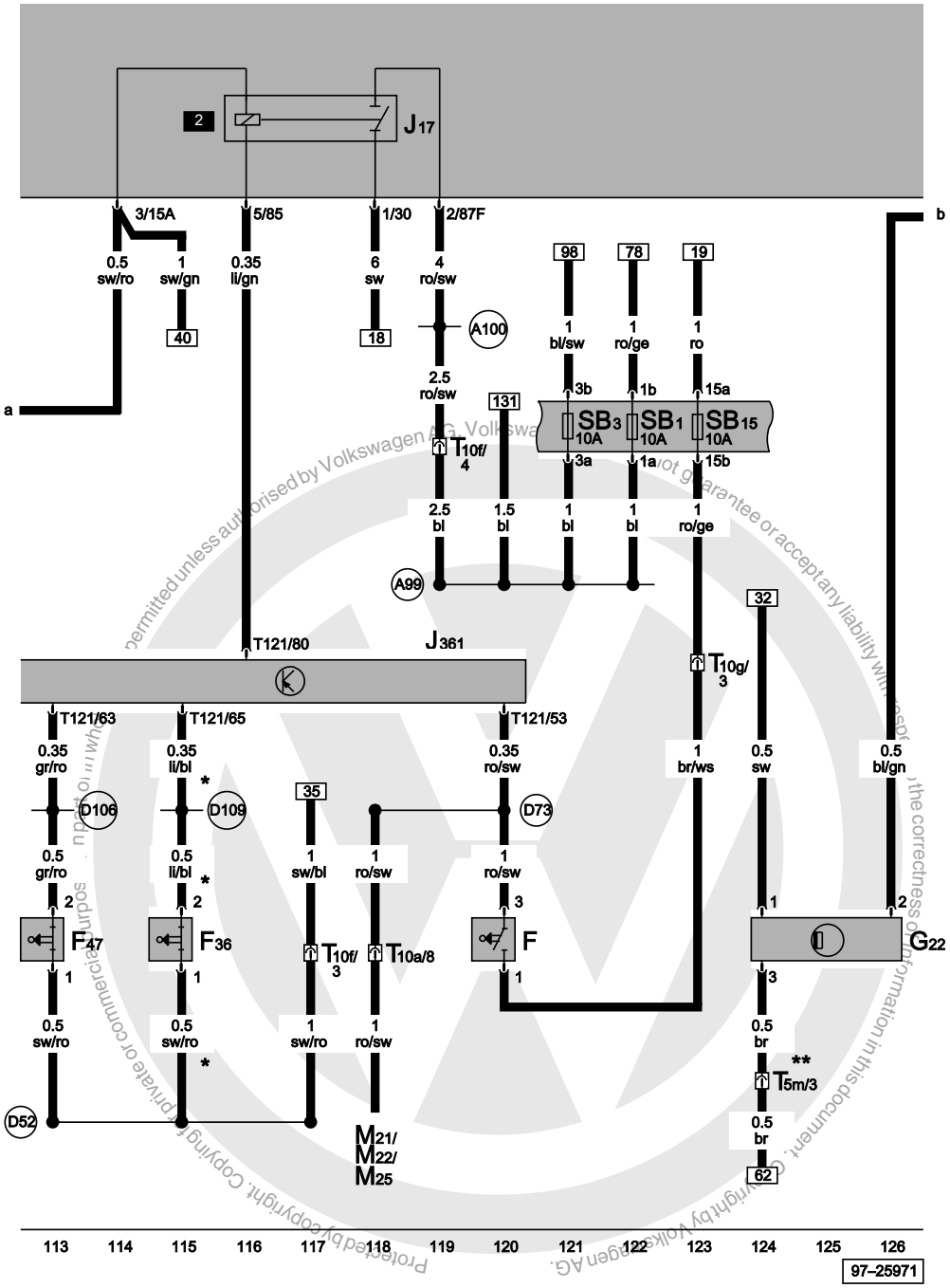

Simos control unit, brake light switch, clutch pedal switch, cruise control system brake pedal switch (diesel direct injection system), speedometer sender (hall sender, on gearbox), fuel pump relay

F	Brake light switch
F36	Clutch pedal switch
F47	Cruise control system brake pedal switch (diesel direct injection system)
G22	Speedometer sender (Hall sender, on gearbox)
J17	Fuel pump relay
J361	Simos control unit
M21	Brake and tail light bulb, left
M22	Brake and tail light bulb, right
M25	High level brake light bulb
SB1	Fuse -1- on fuse box
SB3	Fuse -3- on fuse box
SB15	Fuse -15- on fuse box
T5m	5-pin connector, in engine
T10a	10-pin connector, black, in protective housing for connectors
T10f	10-pin connector, purple, in protective housing for connectors
T121	121-pin connector
T10g	10-pin connector, red, in protective housing for connectors
209	Earth connection -6-, in engine compartment wiring harness
A99	Connection -1- (87), in dash panel wiring harness
A100	Connection -2- (87), in dash panel wiring harness
D52	Positive (+) connection (15a), in engine compartment wiring harness
D73	Positive (+) connection (54), in engine compartment wiring harness
D106	Connection -4-, in engine compartment wiring harness
D109	Connection -7-, in engine compartment wiring harness
*	Only models with manual gearbox
**	Connector T15m, only models with automatic gearbox

ws	=	white
sw	=	black
ro	=	red
br	=	brown
gn	=	green
bl	=	blue
gr	=	grey
li	=	purple
ge	=	yellow
or	=	orange
rs	=	pink

satelettronica

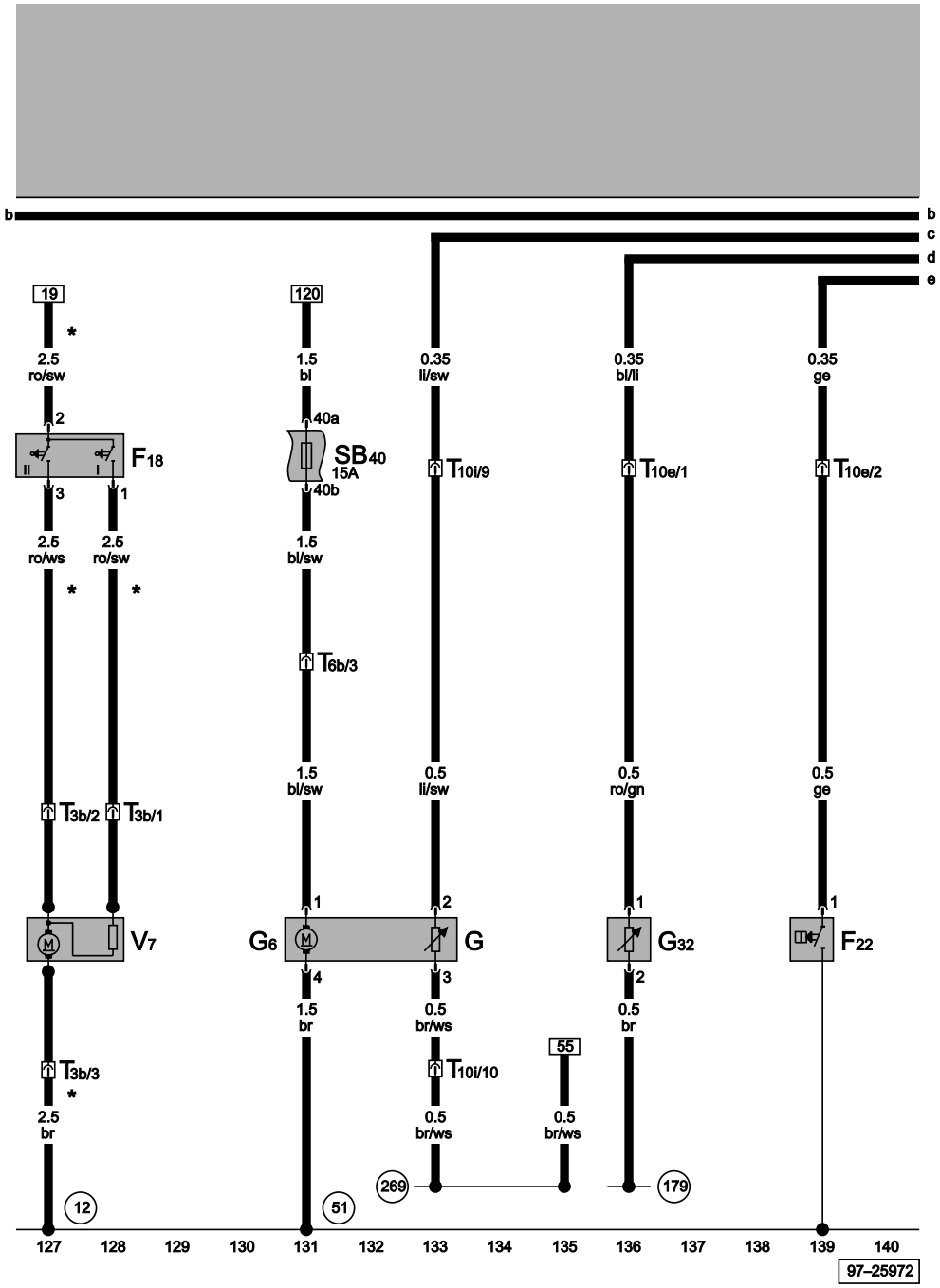

Radiator fan thermo-switch, oil pressure switch (0.3 bar), fuel gauge sender, fuel pump (pre-supply pump), coolant shortage indicator sender

F18	Radiator fan thermo-switch
F22	Oil pressure switch (0.3 bar)
G	Fuel gauge sender
G6	Fuel pump (pre-supply pump)
G32	Coolant shortage indicator sender
SB40	Fuse -40- on fuse box
T3b	3-pin connector, in engine compartment, front left
T6b	6-pin connector, grey, in protective housing for connectors
T10e	10-pin connector, green, in protective housing for connectors
T10i	10-pin connector, orange, in protective housing for connectors
V7	Radiator fan
12	Earth point, in engine compartment, left
51	Earth point, in right luggage compartment
179	Earth connection, in left headlight wiring harness
269	Earth connection (sender earth) -1-, in dash panel wiring harness
*	Only models with manual gearbox

ws	=	white
sw	=	black
ro	=	red
br	=	brown
gn	=	green
bl	=	blue
gr	=	grey
li	=	purple
ge	=	yellow
or	=	orange
rs	=	pink

Protected by copyright. Copying for private or commercial purposes, in part or in whole, is not permitted unless authorised by Volkswagen AG. Volkswagen AG does not guarantee or accept any liability with respect to the correctness of information in this document. Copyright by Volkswagen AG.
satelettronica

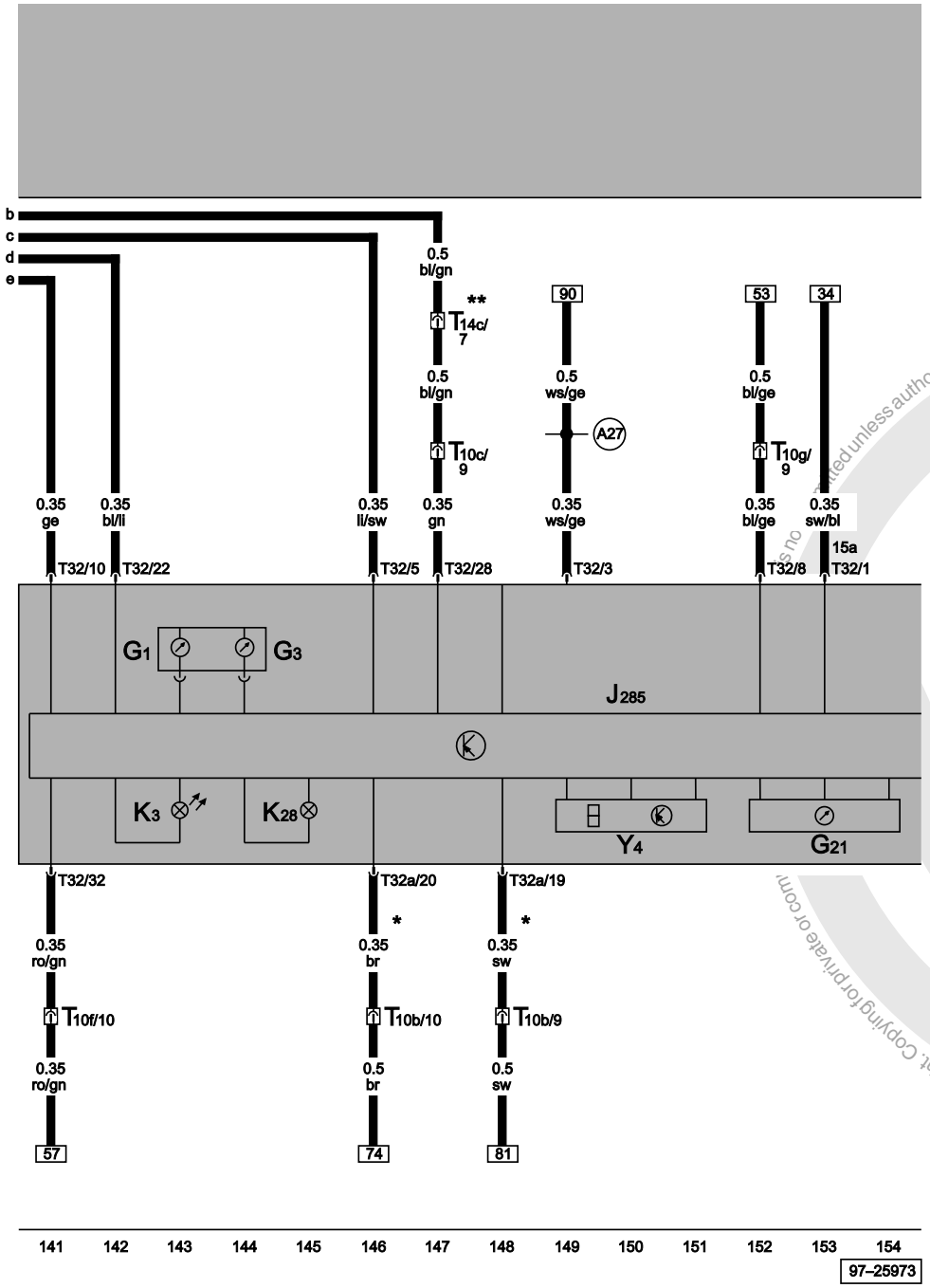

Control unit with display in dash panel insert, fuel gauge, coolant temperature gauge, speedometer oil pressure warning lamp, coolant temperature/coolant shortage warning lamp

G1	Fuel gauge
G3	Coolant temperature gauge
G21	Speedometer
J285	Control unit with display in dash panel insert
K3	Oil pressure warning lamp
K28	Coolant temperature/coolant shortage warning lamp
T10b	10-pin connector, white, in protective housing for connectors
T10c	10-pin connector, brown, in protective housing for connectors
T10f	10-pin connector, purple, in protective housing for connectors
T10g	10-pin connector, red, in protective housing for connectors
T14c	14-pin connector, in engine
T32	32-pin connector, blue
T32a	32-pin connector, green
Y4	Odometer display
A27	Connection (speed signal), in dash panel wiring harness
*	Data wire
**	Connector T14c, only models with automatic gearbox

ws	=	white
sw	=	black
ro	=	red
br	=	brown
gn	=	green
bl	=	blue
gr	=	grey
li	=	purple
ge	=	yellow
or	=	orange
rs	=	pink

Protected by copyright. Copying for private or commercial purposes, in part or in whole, is not permitted unless authorised by Volkswagen AG. Volkswagen AG does not guarantee acceptability with respect to the correctness of information in this document. Copyright by Volkswagen AG.
satelettronica

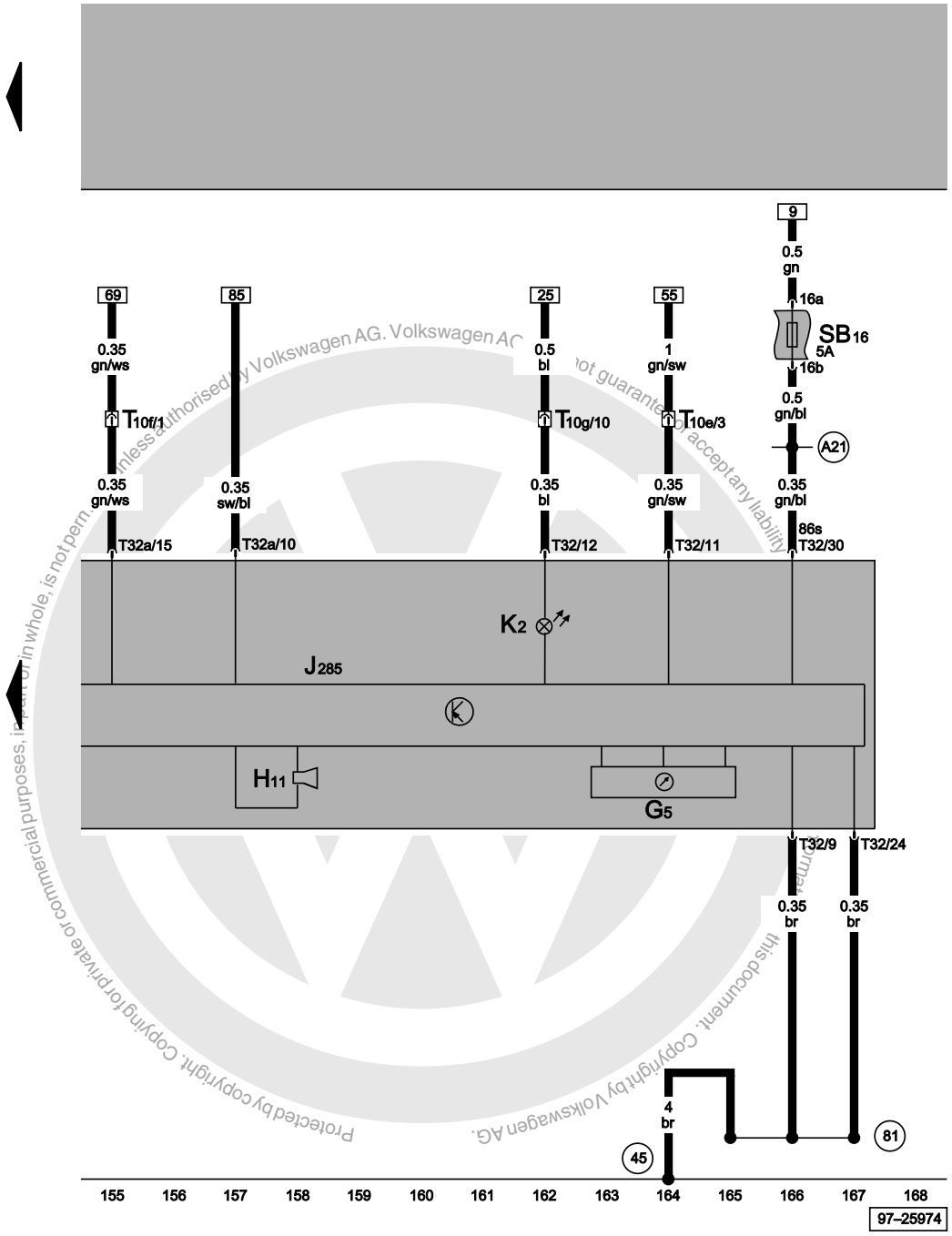

Control unit with display in dash panel insert, rev. counter, oil pressure warning buzzer, alternator warning lamp

G5	Rev. counter
H11	Oil pressure warning buzzer
J285	Control unit with display in dash panel insert
K2	Alternator warning lamp
SB16	Fuse -16- on fuse box
T10e	10-pin connector, green, in protective housing for connectors
T10f	10-pin connector, purple, in protective housing for connectors
T10g	10-pin connector, red, in protective housing for connectors
T32	32-pin connector, blue
T32a	32-pin connector, green
45	Earth point, behind dash panel - centre
81	Earth connection -1-, in dash panel wiring harness
A21	Connection (86s), in dash panel wiring harness

ws	=	white
sw	=	black
ro	=	red
br	=	brown
gn	=	green
bl	=	blue
gr	=	grey
li	=	purple
ge	=	yellow
or	=	orange
rs	=	pink

Protected by copyright. Copying for private or commercial purposes, in part or in whole, is not permitted unless authorised by Volkswagen AG. Volkswagen AG does not guarantee or accept any liability with respect to the correctness of information in this document. Copyright by Volkswagen AG.

satelettronica

1.6 l/74 kW Motronic, engine codes AKL

From October 1999

For alternatives to relay and fuse positions as well as multi-pin connector wiring - see "Fitting locations" section.

Relay locations on relay plate:

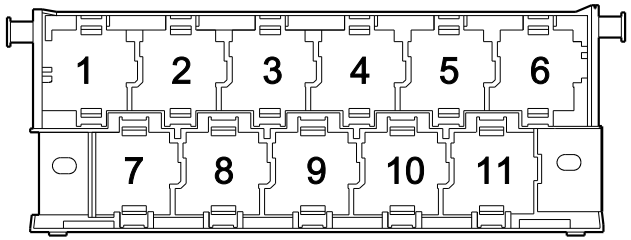

97--25507

2 - Fuel pump relay (167)
4 - Fuel shut-off control unit (405)
6 - X contact relief relay (100)

Note:

- *The number in brackets behind the part designation denotes the control number on the housing.*

Fuse colours

30 A - green
25 A - white
20 A - yellow
15 A - blue
10 A - red
7.5 A - brown
5 A - beige
3 A - purple

Protected by copyright. Copying for private or commercial purposes, in part or in whole, is not permitted unless authorised by Volkswagen AG. Volkswagen AG does not guarantee or accept any liability with respect to the correctness of information in this document. Copyright by Volkswagen AG.
satelettronica

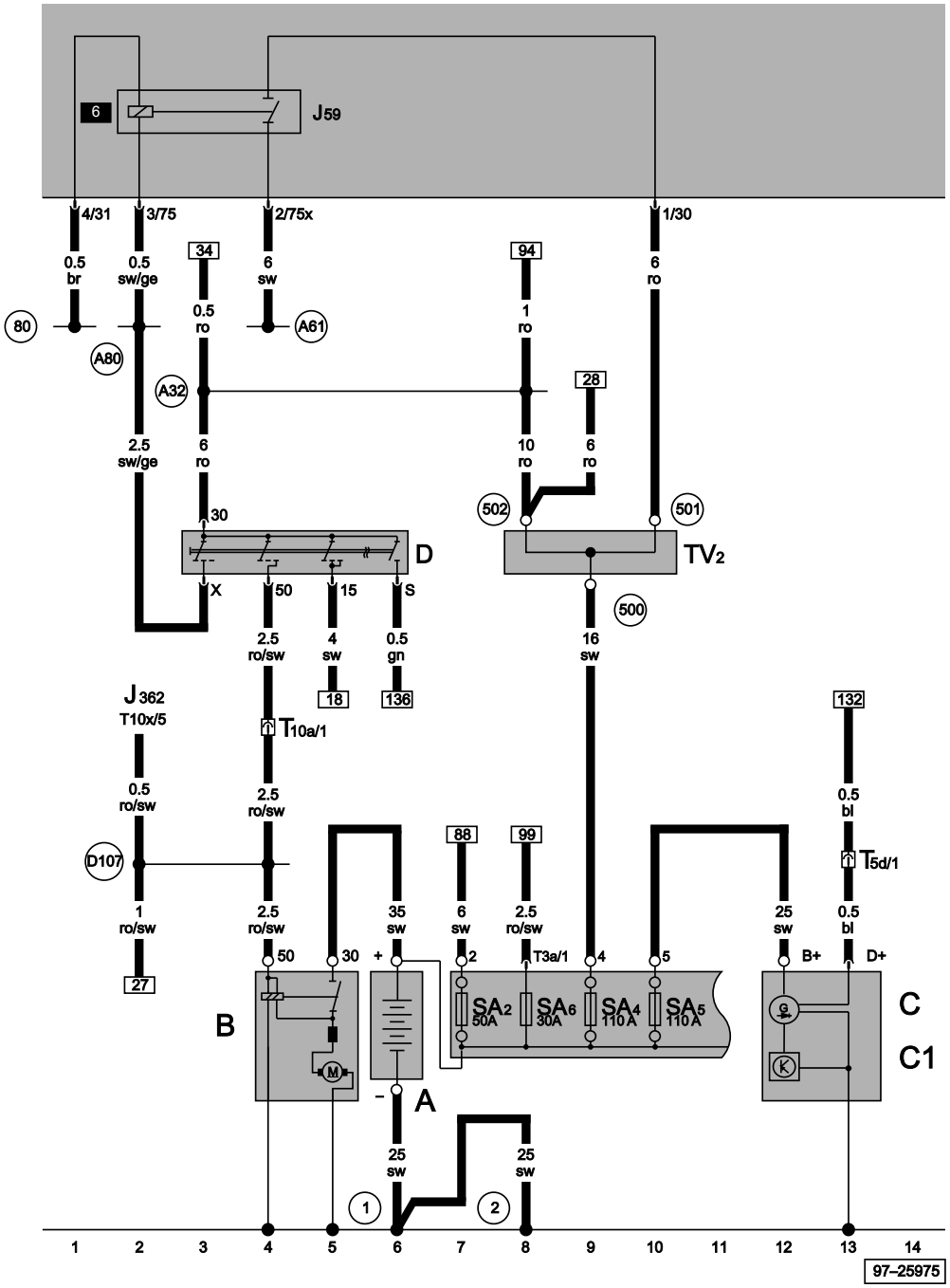

Battery, starter, alternator, voltage regulator, ignition/starter switch, terminal 30 junction box , X contact relief relay

A	Battery
B	Starter
C	Alternator
C1	Voltage regulator
D	Ignition/starter switch
J59	X contact relief relay
J362	Immobilizer control unit
SA2	Fuse -2- on battery fuse box
SA4	Fuse -4- on battery fuse box
SA5	Fuse -5- on battery fuse box
SA6	Fuse -6- on battery fuse box
TV2	Terminal 30 junction box
T3a	3-pin connector, in battery
T5d	5-pin connector, in engine, near gearbox
T10a	10-pin connector, black, in protective housing for connectors
T10x	10-pin connector
1	Earth strap, battery - body
2	Earth strap, gearbox - body
80	Earth connection -1-, in instruments wiring harness
500	Screw connection -1- (30), on relay plate
501	Screw connection -2- (30), on relay plate
502	Screw connection -1- (30a), on relay plate
A32	Positive (+) connection (30), in dash panel wiring harness
A61	Positive (+) connection (X), in instruments wiring harness
A80	Connection -1- (X), in dash panel wiring harness
D107	Connection -5-, in engine compartment wiring harness

ws	=	white
sw	=	black
ro	=	red
br	=	brown
gn	=	green
bl	=	blue
gr	=	grey
li	=	purple
ge	=	yellow
or	=	orange
rs	=	pink

Reproduced by copying for private or commercial purposes, in part or in whole, is not permitted unless authorised by Volkswagen AG. Volkswagen AG does not guarantee or accept any liability with respect to the correctness of information in this document. Copyright by Volkswagen AG.
satelettronica

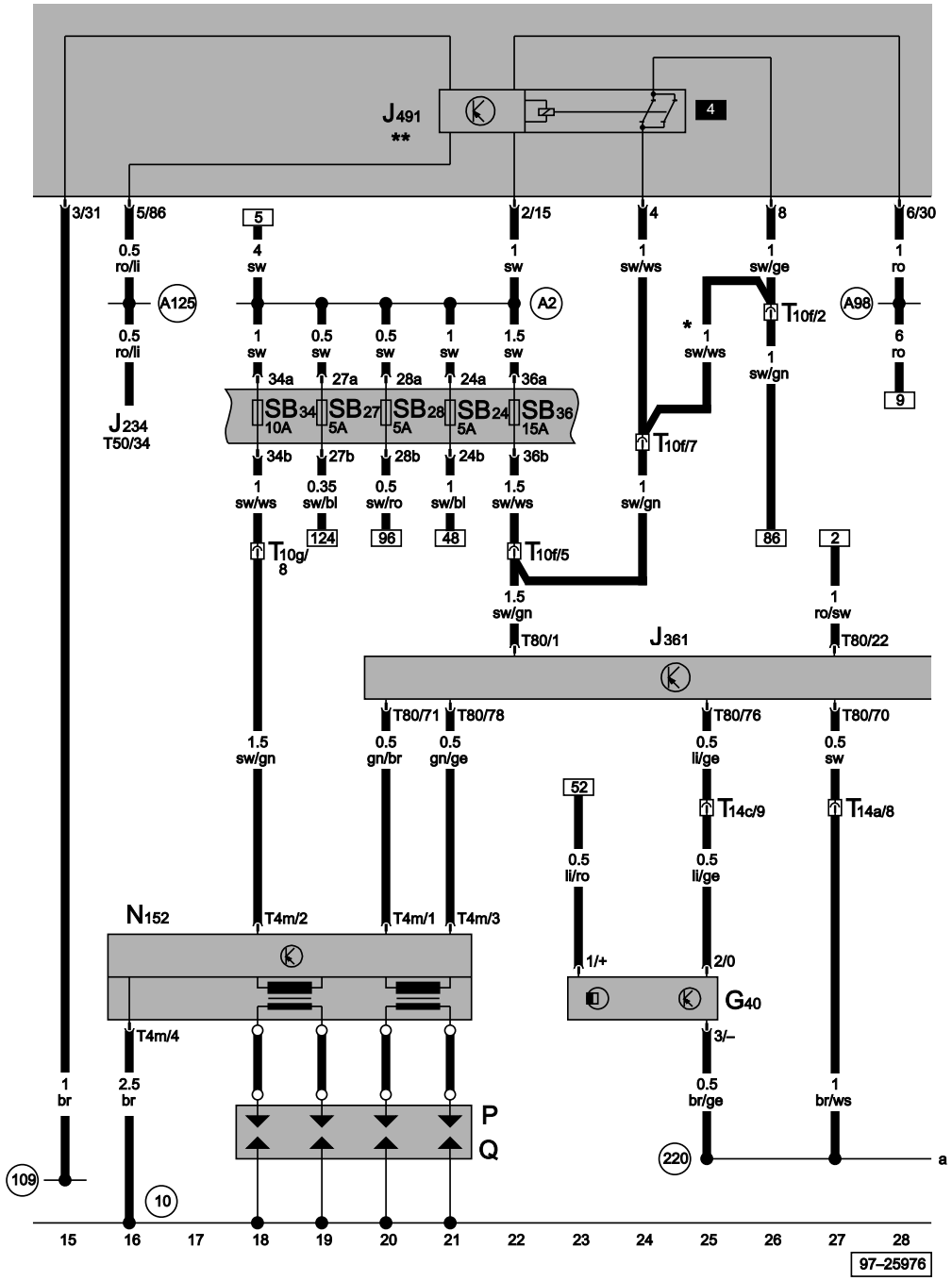

Motronic control unit, hall sender, ignition transformer, spark plug connector, spark plugs, fuel shut-off control unit (crash)

G40	Hall sender
J234	Airbag control unit
J361	Motronic control unit
J491	Fuel shut-off control unit (crash)
N152	Ignition transformer
P	Spark plug connector
Q	Spark plugs
SB24	Fuse -24- on fuse box
SB27	Fuse -27- on fuse box
SB28	Fuse -28- on fuse box
SB34	Fuse -34- on fuse box
SB36	Fuse -36- on fuse box
T4m	4-pin connector, yellow, in ignition transformer
T10f	10-pin connector, purple, in protective housing for connectors
T10g	10-pin connector, red, in protective housing for connectors
T14a	14-pin connector, in engine
T14c	14-pin connector, in engine
T50	50-pin connector
T80	80-pin connector
10	Earth point, in plenum chamber
109	Earth connection, in airbag wiring harness
220	Earth connection (sender earth), in engine wiring harness
A2	Positive (+) connection (15), in dash panel wiring harness
A98	Positive (+) connection -4- (30), in dash panel wiring harness
A125	Connection (crash signal), in dash panel wiring harness
*	Does not apply to airbag
**	Only models with airbag

ws	=	white
sw	=	black
ro	=	red
br	=	brown
gn	=	green
bl	=	blue
gr	=	grey
li	=	purple
ge	=	yellow
or	=	orange
rs	=	pink

Protected by copyright. Copying for private or commercial purposes, in part or in whole, is not permitted unless authorised by Volkswagen AG. Volkswagen AG does not guarantee or accept any liability with respect to the correctness of information in this document. Copyright by Volkswagen AG.

satelettronica

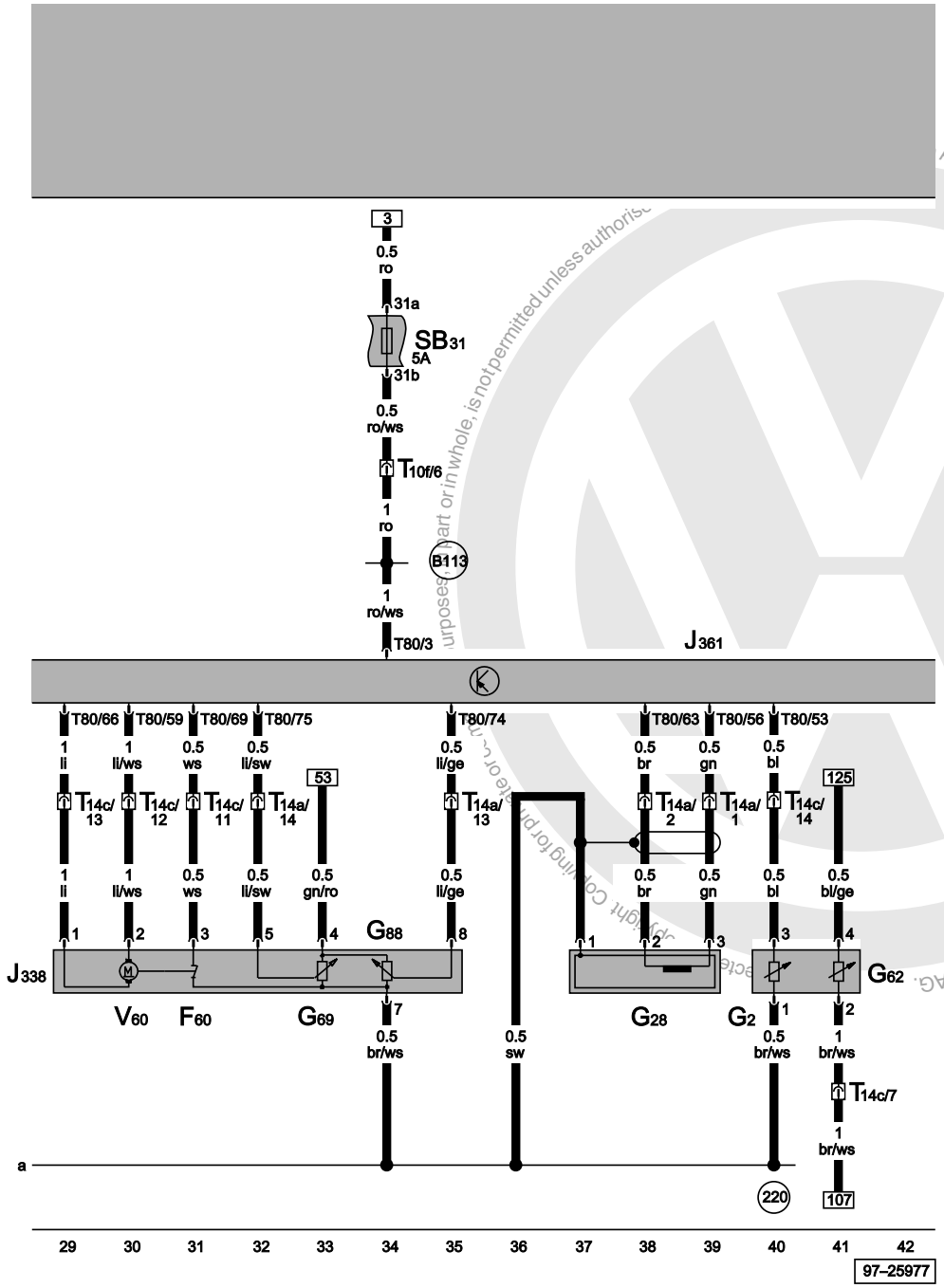

Motronic control unit, idling switch, coolant temperature sender, engine speed sender, throttle valve control unit, throttle valve potentiometer, throttle valve positioner

F60	Idling switch
G2	Coolant temperature sender
G28	Engine speed sender
G62	Coolant temperature sender
G69	Throttle valve potentiometer
G88	Throttle valve positioner potentiometer
J338	Throttle valve control unit
J361	Motronic control unit
SB31	Fuse -31- on fuse box
T10f	10-pin connector, purple, in protective housing for connectors
T14a	14-pin connector, in engine
T14c	14-pin connector, in engine
T80	80-pin connector
V60	Throttle valve positioner
220	Earth connection (sender earth), in engine wiring harness
B113	Positive (+) connection (30a), in left interior wiring harness

ws	=	white
sw	=	black
ro	=	red
br	=	brown
gn	=	green
bl	=	blue
gr	=	grey
li	=	purple
ge	=	yellow
or	=	orange
rs	=	pink

AG does not guarantee or accept any liability with respect to the correctness of information in this document. Copyright by Volkswagen AG.
Copyright Copying for private or commercial purposes, in part or in whole, is not permitted unless authorised by Volkswagen AG.
satelettronica

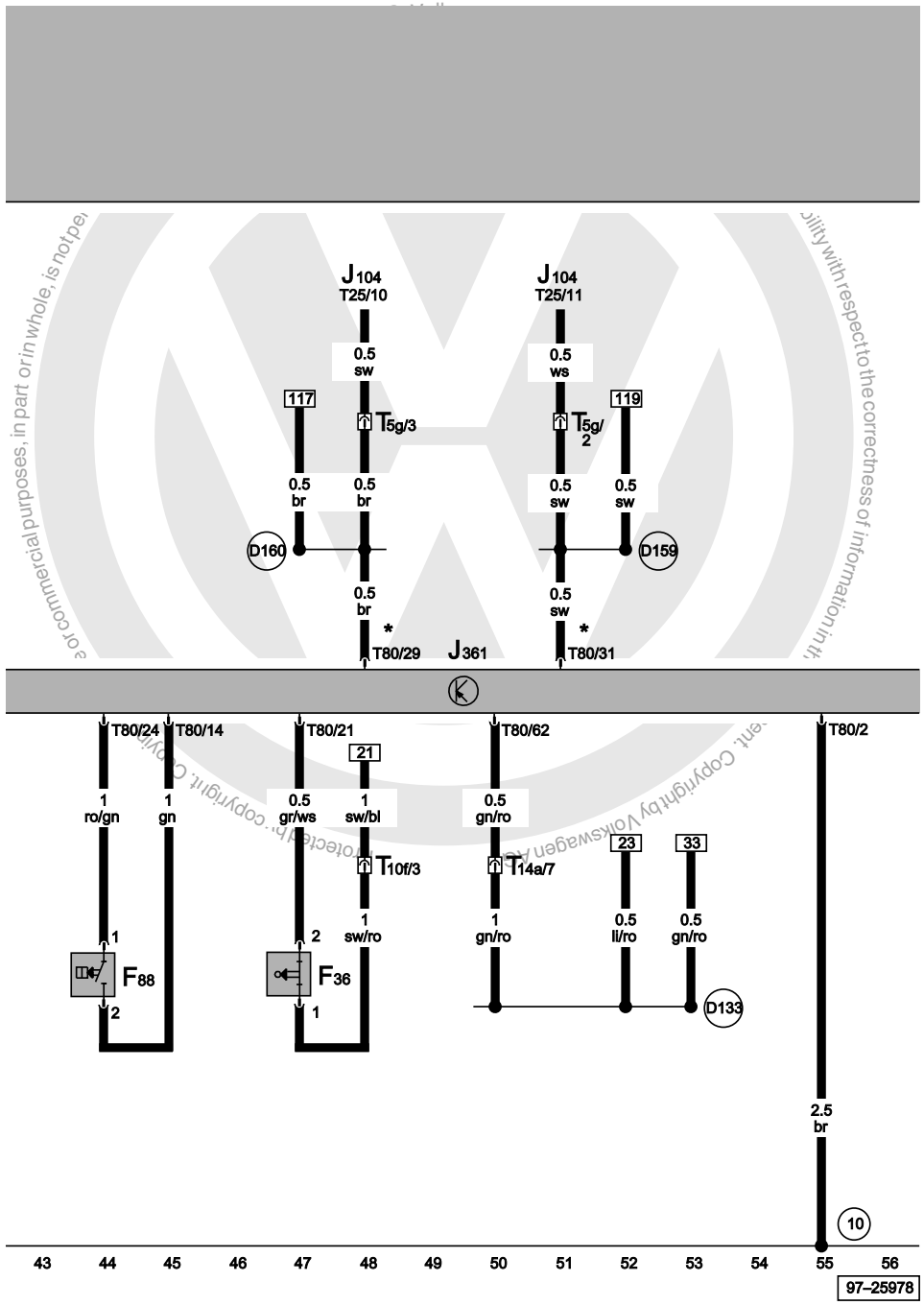

Motronic control unit, clutch pedal switch, power assisted steering pressure switch

F36	Clutch pedal switch
F88	Power assisted steering pressure switch
J104	ABS with EDL control unit
J361	Motronic control unit
T5g	5-pin connector, pink, in protective housing for connectors
T10f	10-pin connector, purple, in protective housing for connectors
T14a	14-pin connector, in engine
T25	25-pin connector
T80	80-pin connector
10	Earth point, in plenum chamber
D133	Connection (Hall sender signal), in engine compartment wiring harness
D159	Positive (+) connection (high bus), in engine compartment wiring harness
D160	Positive (+) connection (low bus), in engine compartment wiring harness
*	Data wire

ws	=	white
sw	=	black
ro	=	red
br	=	brown
gn	=	green
bl	=	blue
gr	=	grey
li	=	purple
ge	=	yellow
or	=	orange
rs	=	pink

satelettronica

Motronic control unit, knock sensor 1, injectors

G61	Knock sensor I
J361	Motronic control unit
J362	Immobilizer control unit
N30	Injector, cylinder 1
N31	Injector, cylinder 2
N32	Injector, cylinder 3
N33	Injector, cylinder 4
T3c	3-pin connector
T10c	10-pin connector, brown, in protective housing for connectors
T10x	10-pin connector
T14a	14-pin connector, in engine
T14c	14-pin connector, in engine
T80	80-pin connector
132	Earth connection -3-, in engine compartment wiring harness
D95	Connection (injectors), in engine compartment wiring harness

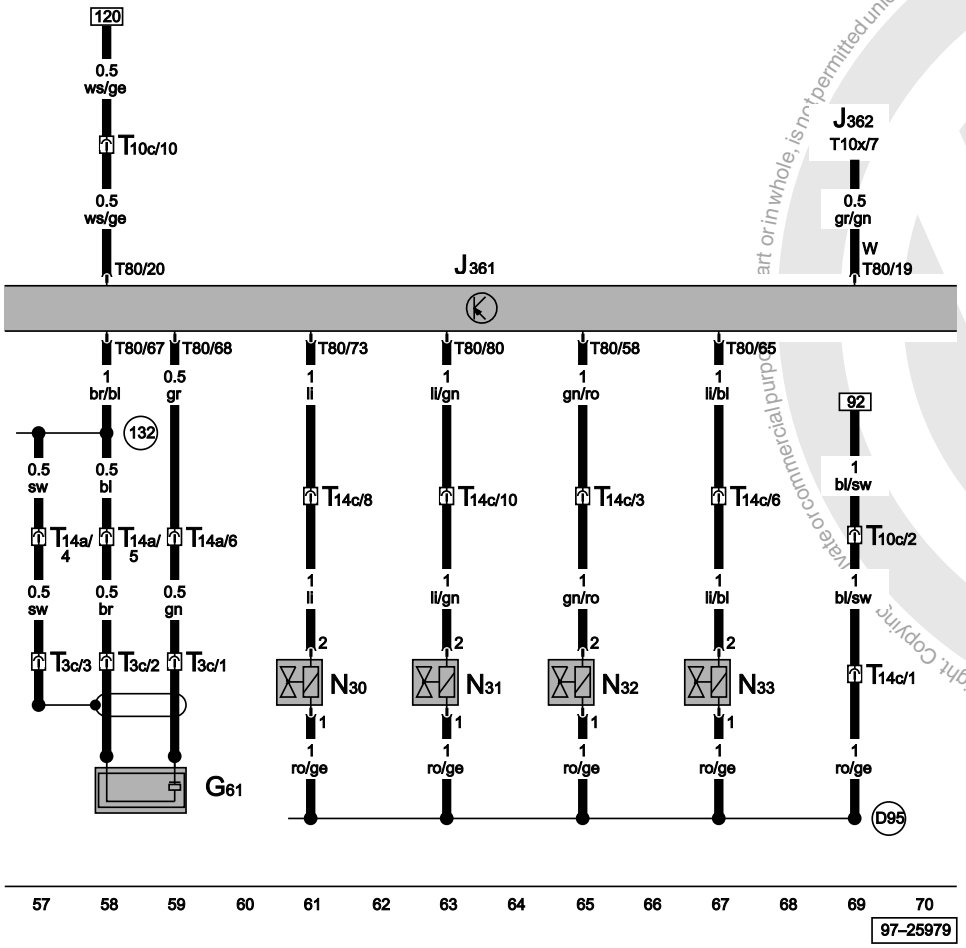

ws	=	white
sw	=	black
ro	=	red
br	=	brown
gn	=	green
bl	=	blue
gr	=	grey
li	=	purple
ge	=	yellow
or	=	orange
rs	=	pink

Protected by copyright. Copying for private or commercial purposes, in part or in whole, is not permitted unless authorised by Volkswagen AG. Volkswagen AG does not guarantee or assume any liability with respect to the correctness of information in this document. Copyright by Volkswagen AG.
satelettronica

Motronic control unit, lambda probe, air mass meter, intake manifold change-over valve, lambda probe heater

G39	Lambda probe
G70	Air mass meter
J361	Motronic control unit
N156	Intake manifold change-over valve
T4e	4-pin connector, in engine
T14a	14-pin connector, in engine
T14c	14-pin connector, in engine
T80	80-pin connector
Z19	Lambda probe heater
D80	Positive (+) connection (87a - for active. charcoal filter system solenoid), in engine compartment wiring harness

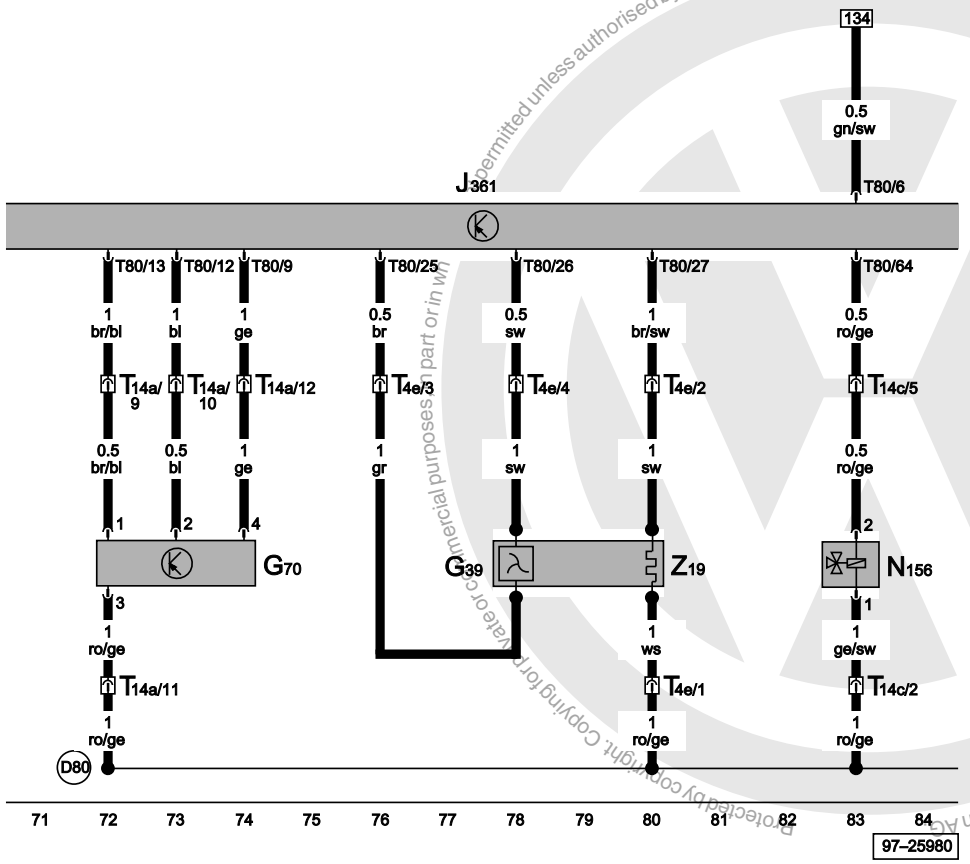

ws	=	white
sw	=	black
ro	=	red
br	=	brown
gn	=	green
bl	=	blue
gr	=	grey
li	=	purple
ge	=	yellow
or	=	orange
rs	=	pink

Protected by copyright. Copying for private or commercial purposes, in part or in whole, is not permitted unless authorised by Volkswagen AG. Volkswagen AG does not guarantee or accept any liability with respect to the correctness of information in this document. Copyright by Volkswagen AG.

satelettronica

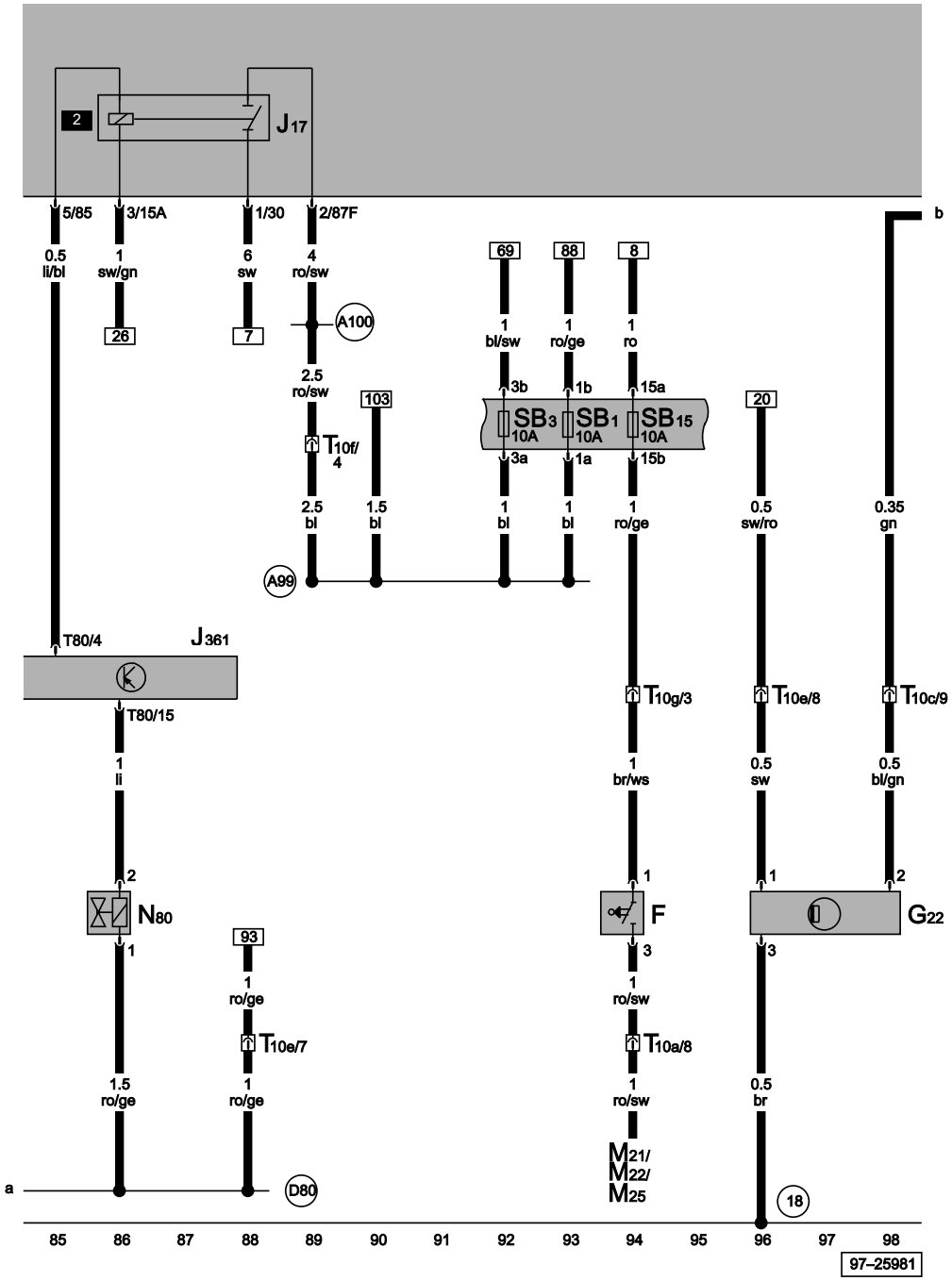

Motronic control unit, brake light switch, speedometer sender (hall sender, on gearbox), activated charcoal filter system solenoid valve 1 (pulsed), fuel pump relay

F	Brake light switch
G22	Speedometer sender (Hall sender, on gearbox)
J17	Fuel pump relay
J361	Motronic control unit
M21	Brake and tail light bulb, left
M22	Brake and tail light bulb, right
M25	High level brake light bulb
N80	Activated charcoal filter system solenoid valve 1 (pulsed)
SB1	Fuse -1- on fuse box
SB3	Fuse -3- on fuse box
SB15	Fuse -15- on fuse box
T10a	10-pin connector, black, in protective housing for connectors
T10c	10-pin connector, brown, in protective housing for connectors
T10e	10-pin connector, green, in protective housing for connectors
T10f	10-pin connector, purple, in protective housing for connectors
T10g	10-pin connector, red, in protective housing for connectors
T80	80-pin connector
18	Earth point, on engine block
A99	Connection -1- (87), in dash panel wiring harness
A100	Connection -2- (87), in dash panel wiring harness
D80	Positive (+) connection (87a - for active. charcoal filter system solenoid), in engine compartment wiring harness

ws	=	white
sw	=	black
ro	=	red
br	=	brown
gn	=	green
bl	=	blue
gr	=	grey
li	=	purple
ge	=	yellow
or	=	orange
rs	=	pink

Protected by copyright. Copying for private or commercial purposes, in part or in whole, is not permitted unless authorised by Volkswagen AG. Volkswagen AG does not guarantee or accept any liability with respect to the correctness of information in this document. Copyright by Volkswagen AG.
satelettronica

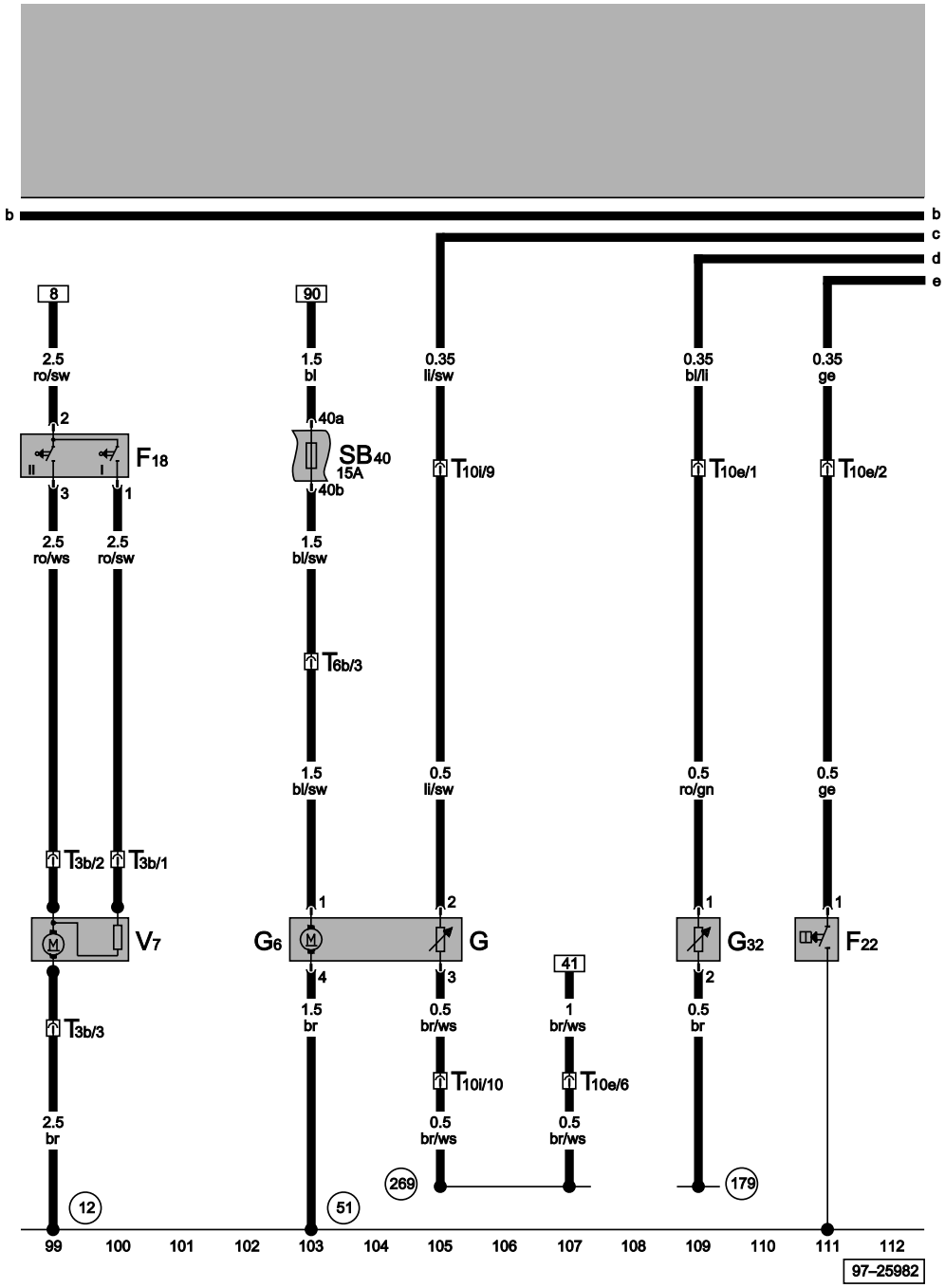

Radiator fan thermo-switch, radiator fan, oil pressure switch (0.3 bar), fuel gauge sender, fuel pump (pre-supply pump), coolant shortage indicator sender

F18	Radiator fan thermo-switch
F22	Oil pressure switch (0.3 bar)
G	Fuel gauge sender
G6	Fuel pump (pre-supply pump)
G32	Coolant shortage indicator sender
SB40	Fuse -40- on fuse box
T3b	3-pin connector, in engine compartment, front left
T6b	6-pin connector, grey, in protective housing for connectors
T10e	10-pin connector, green, in protective housing for connectors
T10i	10-pin connector, orange, in protective housing for connectors
V7	Radiator fan
12	Earth point, in engine compartment, left
51	Earth point, in right luggage compartment
179	Earth connection, in left headlight wiring harness
269	Earth connection (sender earth) -1-, in dash panel wiring harness

ws	=	white
sw	=	black
ro	=	red
br	=	brown
gn	=	green
bl	=	blue
gr	=	grey
li	=	purple
ge	=	yellow
or	=	orange
rs	=	pink

Protected by copyright. Copying for private or commercial purposes, in part or in whole, is not permitted unless authorised by Volkswagen AG. Volkswagen AG does not guarantee or assume any liability with respect to the correctness of information in this document. Copyright by Volkswagen AG.
satelettronica

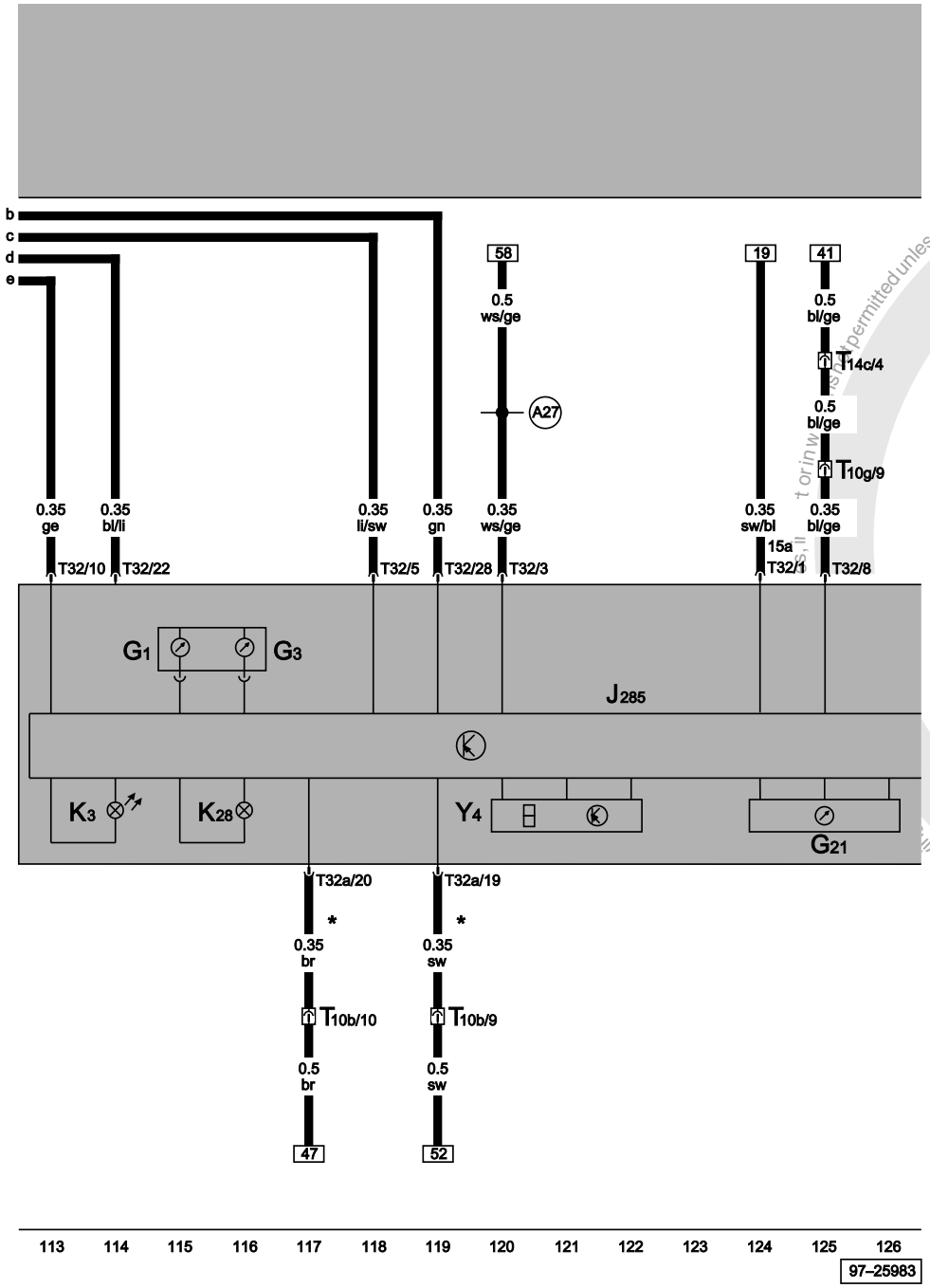

Control unit with display in dash panel insert, fuel gauge coolant temperature gauge, speedometer, oil pressure warning lamp, coolant temperature/coolant shortage warning lamp

G1	Fuel gauge
G3	Coolant temperature gauge
G21	Speedometer
J285	Control unit with display in dash panel insert
K3	Oil pressure warning lamp
K28	Coolant temperature/coolant shortage warning lamp
T10b	10-pin connector, white, in protective housing for connectors
T10g	10-pin connector, red, in protective housing for connectors
T14c	14-pin connector, in engine
T32	32-pin connector, blue
T32a	32-pin connector, green
Y4	Odometer display
(A27)	Connection (speed signal), in dash panel wiring harness
*	Data wire

ws	=	white
sw	=	black
ro	=	red
br	=	brown
gn	=	green
bl	=	blue
gr	=	grey
li	=	purple
ge	=	yellow
or	=	orange
rs	=	pink

Protected by copyright. Copyright by Volkswagen AG. Volkswagen AG does not guarantee the correctness of information in this document. Copyright by Volkswagen AG. is not permitted unless authorised by Volkswagen AG.
satelettronica

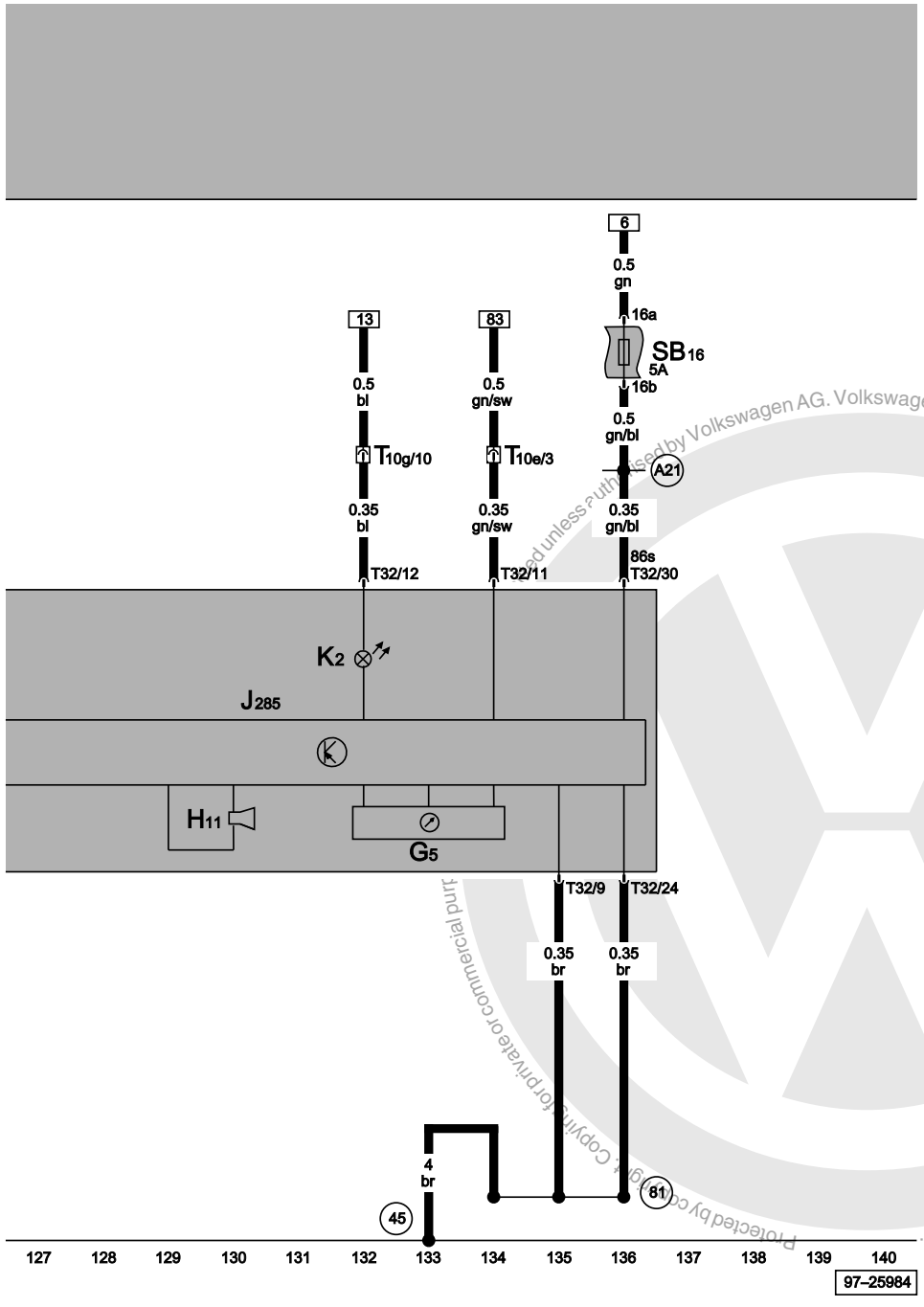

Control unit with display in dash panel insert, rev. counter, oil pressure warning buzzer, alternator warning lamp

G5	Rev. counter
H11	Oil pressure warning buzzer
J285	Control unit with display in dash panel insert
K2	Alternator warning lamp
SB16	Fuse -16- on fuse box
T10e	10-pin connector, green, in protective housing for connectors
T10g	10-pin connector, red, in protective housing for connectors
T32	32-pin connector, blue
45	Earth point, behind dash panel - centre
81	Earth connection -1-, in dash panel wiring harness
A21	Connection (86s), in dash panel wiring harness

ws	=	white
sw	=	black
ro	=	red
br	=	brown
gn	=	green
bl	=	blue
gr	=	grey
li	=	purple
ge	=	yellow
or	=	orange
rs	=	pink

Protected by copyright. Copying for private or commercial purposes, in part or in whole, is not permitted unless authorised by Volkswagen AG. Volkswagen AG does not guarantee or accept any liability with respect to the correctness of information in this document. Copyright by Volkswagen AG.

satelettronica

1.6 l Simos/74 kW, engine codes AEH

⇒ Only models with automatic gearbox

From October 1999

For alternatives to relay and fuse positions as well as multi-pin connector wiring - see "Fitting locations" section.

Relay locations on relay plate:

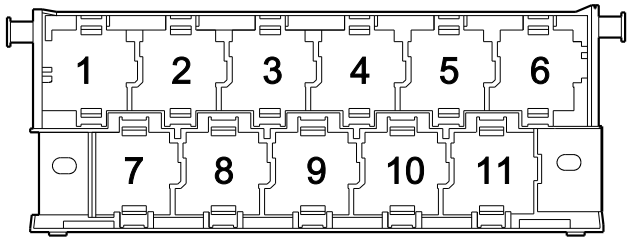

97--25507

1 - Radiator fan relay (53)
2 - Fuel pump relay (167)
4 - Fuel shut-off control unit (405)
6 - X contact relief relay (100)

Note:

♦ *The number in brackets behind the part designation denotes the control number on the housing.*

Fuse colours

30 A - green
25 A - white
20 A - yellow
15 A - blue
10 A - red
7.5 A - brown
5 A - beige
3 A - purple

Protected by copyright. Copying for private or commercial purposes, in part or in whole, is not permitted unless authorised by Volkswagen AG. Volkswagen AG does not guarantee or accept any liability with respect to the correctness of information in this document. Copyright by Volkswagen AG.

satelettronica

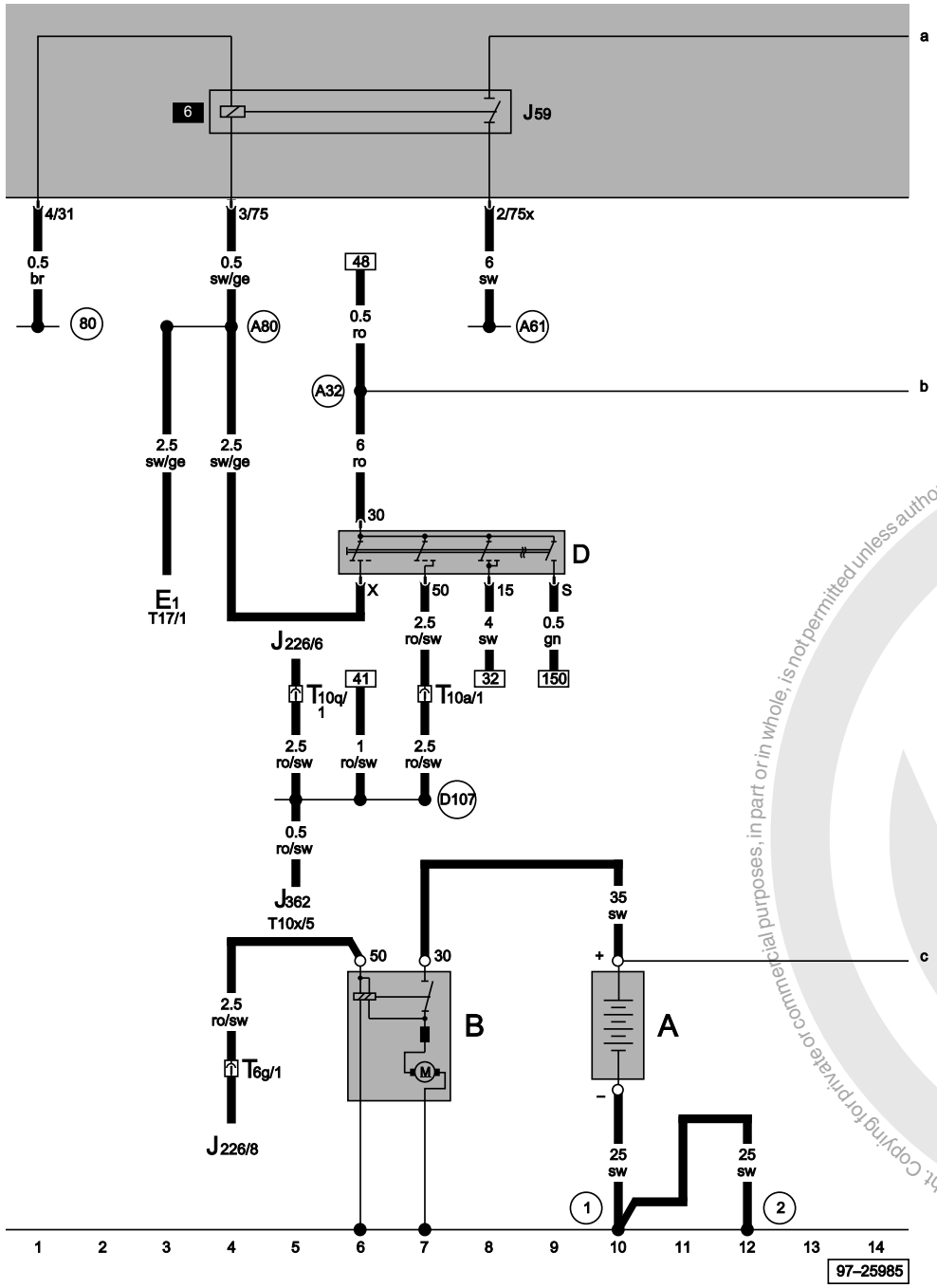

Battery, starter, ignition/starter switch, X contact relief relay

A	Battery
B	Starter
D	Ignition/starter switch
E1	Lighting switch
J59	X contact relief relay
J226	Starter inhibitor and reversing light relay
J362	Immobilizer control unit
T6g	6-pin connector, black, in protective housing for connectors
T10a	10-pin connector, black, in protective housing for connectors
T10q	10-pin connector, blue, in protective housing for connectors
T10x	10-pin connector
T17	17-pin connector
1	Earth strap, battery - body
2	Earth strap, gearbox - body
80	Earth connection -1-, in instruments wiring harness
A32	Positive (+) connection (30), in dash panel wiring harness
A61	Positive (+) connection (X), in instruments wiring harness
A80	Connection -1- (X), in dash panel wiring harness
D107	Connection -5-, in engine compartment wiring harness

ws	=	white
sw	=	black
ro	=	red
br	=	brown
gn	=	green
bl	=	blue
gr	=	grey
li = purple
ge = yellow
or = orange
rs = pink

Protected by copyright. Copying for private or commercial purposes, in part or in whole, is not permitted unless authorised by Volkswagen AG. Volkswagen AG does not guarantee or accept any liability with respect to the correctness of information in this document. Copyright by Volkswagen AG.

satelettronica

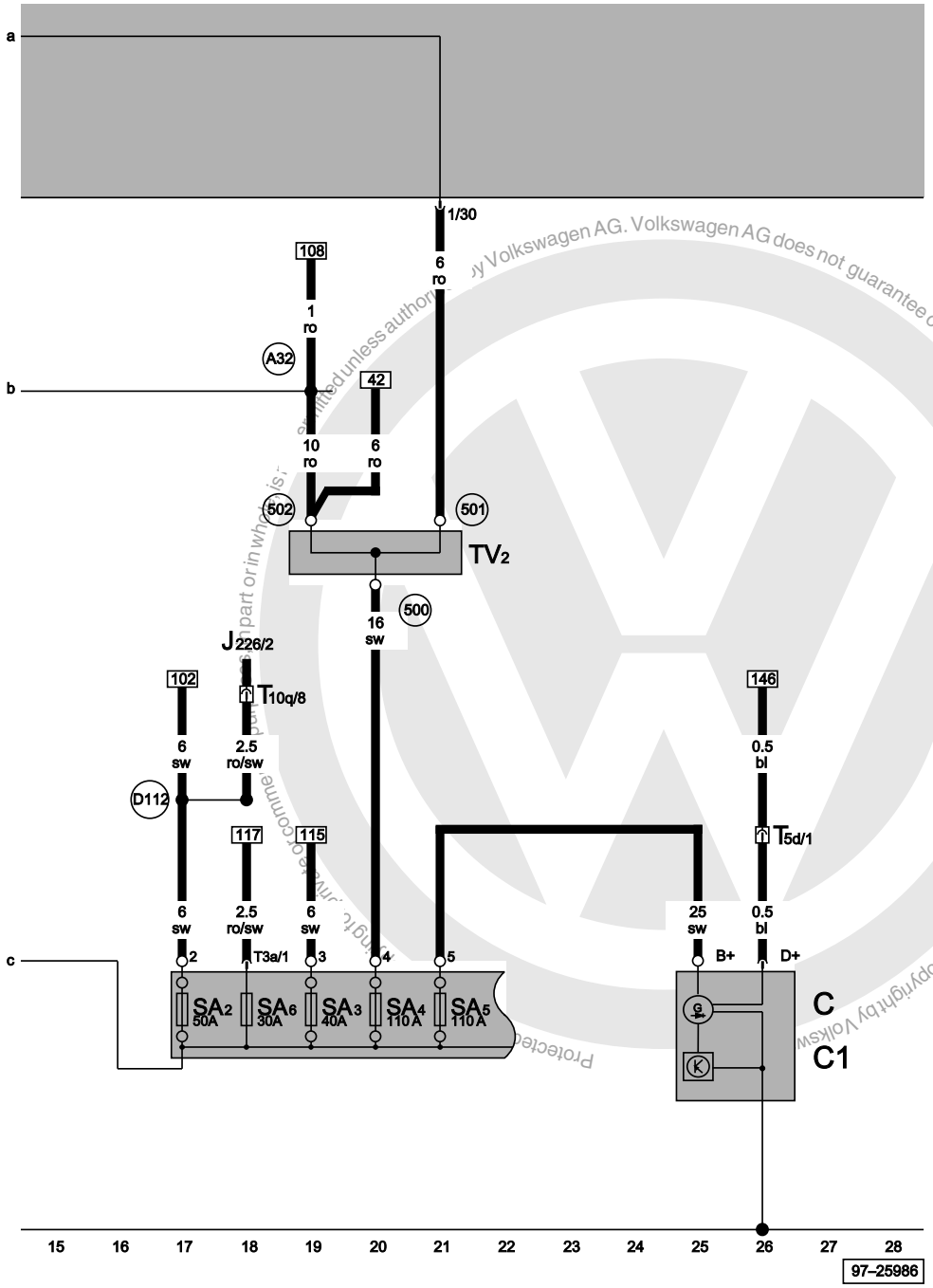

Alternator, voltage regulator, terminal 30 junction box

C	Alternator
C1	Voltage regulator
J226	Starter inhibitor and reversing light relay
SA2	Fuse -2- on battery fuse box
SA3	Fuse -3- on battery fuse box
SA4	Fuse -4- on battery fuse box
SA5	Fuse -5- on battery fuse box
SA6	Fuse -6- on battery fuse box
TV2	Terminal 30 junction box
T3a	3-pin connector, in battery
T5d	5-pin connector, in engine, near gearbox
T10q	10-pin connector, blue, in protective housing for connectors
500	Screw connection -1- (30), on relay plate
501	Screw connection -2- (30), on relay plate
502	Screw connection -1- (30a), on relay plate
A32	Positive (+) connection (30), in dash panel wiring harness
D112	Connection -10-, in engine compartment wiring harness

ws	=	white
sw	=	black
ro	=	red
br	=	brown
gn	=	green
bl	=	blue
gr	=	grey
li	=	purple
ge	=	yellow
or	=	orange
rs	=	pink

satelettronica

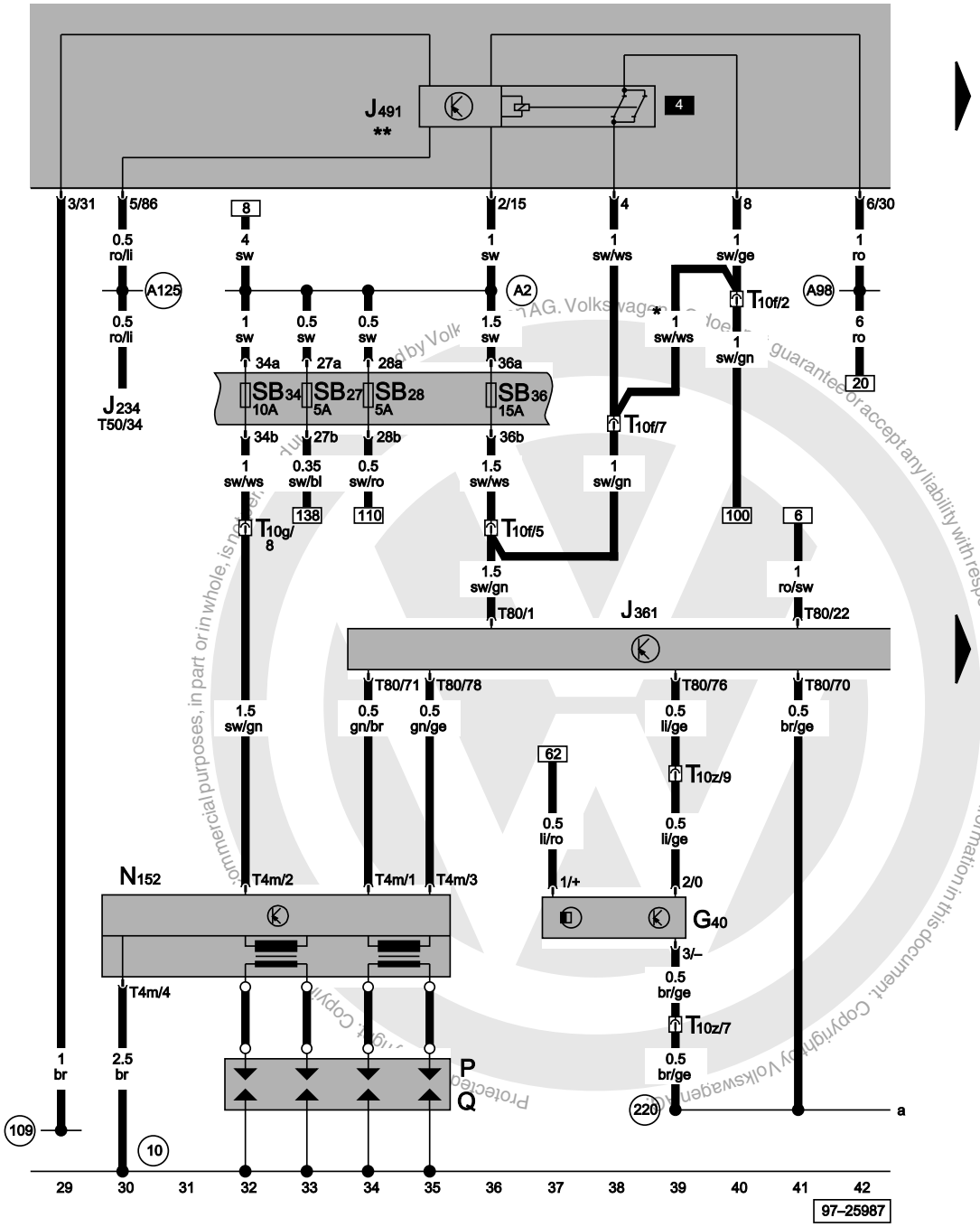

Simos control unit, hall sender, ignition transformer, spark plug connector, spark plugs, fuel shut-off control unit (crash)

G40	Hall sender
J234	Airbag control unit
J361	Simos control unit
J491	Fuel shut-off control unit (crash)
N152	Ignition transformer
P	Spark plug connector
Q	Spark plugs
SB27	Fuse -27- on fuse box
SB28	Fuse -28- on fuse box
SB34	Fuse -34- on fuse box
SB36	Fuse -36- on fuse box
T4m	4-pin connector, yellow, in ignition transformer
T10f	10-pin connector, purple, in protective housing for connectors
T10g	10-pin connector, red, in protective housing for connectors
T10z	10-pin connector
T50	50-pin connector
T80	80-pin connector
10	Earth point, in plenum chamber
109	Earth connection, in airbag wiring harness
220	Earth connection (sender earth), in engine wiring harness
A2	Positive (+) connection (15), in dash panel wiring harness
A98	Positive (+) connection -4- (30), in dash panel wiring harness
A125	Connection (crash signal), in dash panel wiring harness
*	Does not apply to airbag
**	Only models with airbag

ws	=	white
sw	=	black
ro	=	red
br	=	brown
gn	=	green
bl	=	blue
gr	=	grey
li	=	purple
ge	=	yellow
or	=	orange
rs	=	pink

satelettronica

Volkswagen AG. Volkswagen AG does not guarantee or accept any liability with respect to the correctness of information in this document. Copyright by Volkswagen AG. Protected by copyright. Copying for private or commercial purposes, in part or in whole, is not permitted unless authorised by Volkswagen AG.

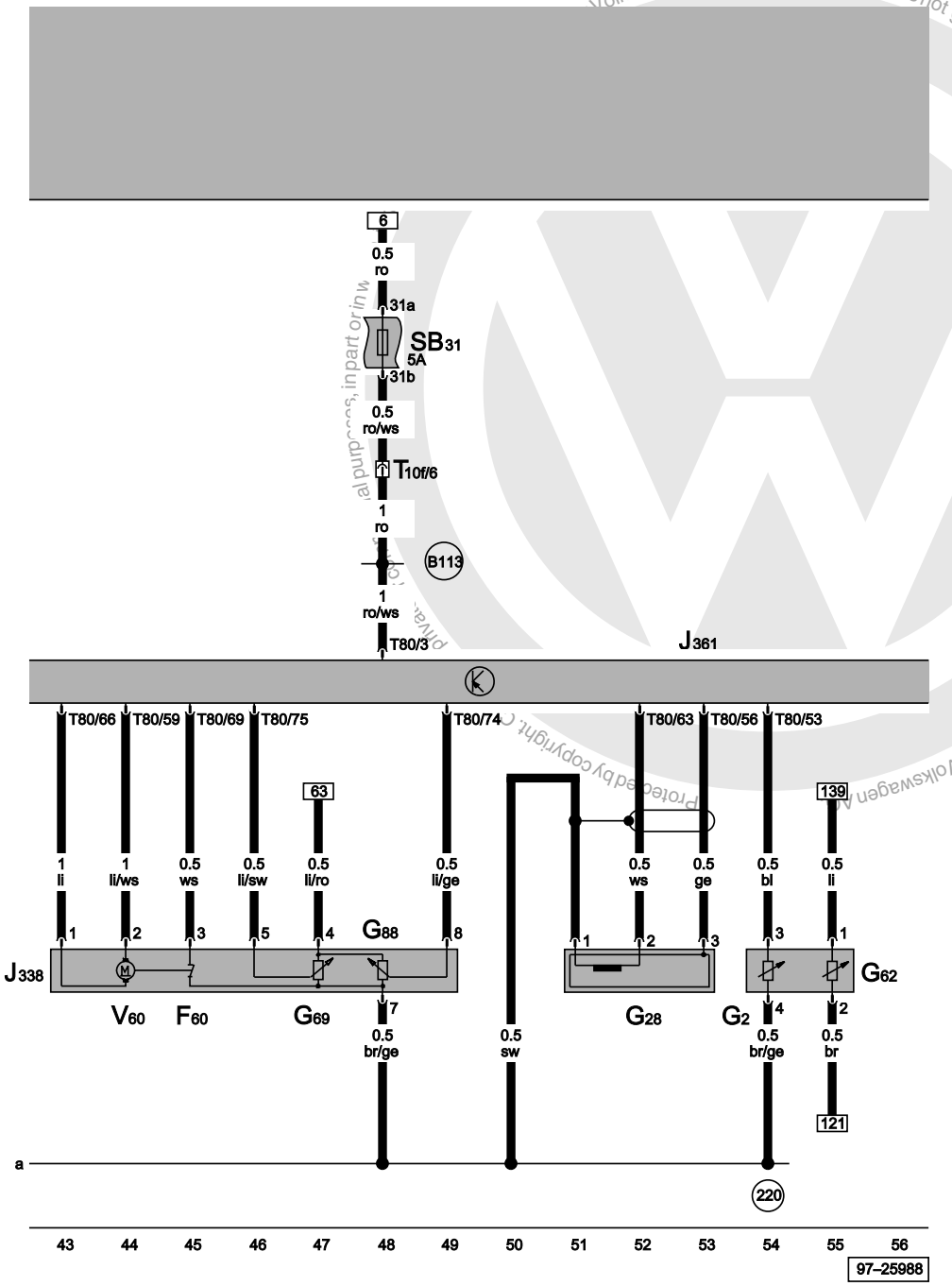

Simos control unit, throttle valve control unit, throttle valve potentiometer, throttle valve positioner, idling switch, coolant temperature sender, engine speed sender

F60	Idling switch
G2	Coolant temperature sender
G28	Engine speed sender
G62	Coolant temperature sender
G69	Throttle valve potentiometer
G88	Throttle valve positioner potentiometer
J338	Throttle valve control unit
J361	Simos control unit
SB31	Fuse -31- on fuse box
T10f	10-pin connector, purple, in protective housing for connectors
T80	80-pin connector
V60	Throttle valve positioner
220	Earth connection (sender earth), in engine wiring harness
B113	Positive (+) connection (30a), in left interior wiring harness

ws	=	white
sw	=	black
ro	=	red
br	=	brown
gn	=	green
bl	=	blue
gr	=	grey
li	=	purple
ge	=	yellow
or	=	orange
rs	=	pink

satelettronica

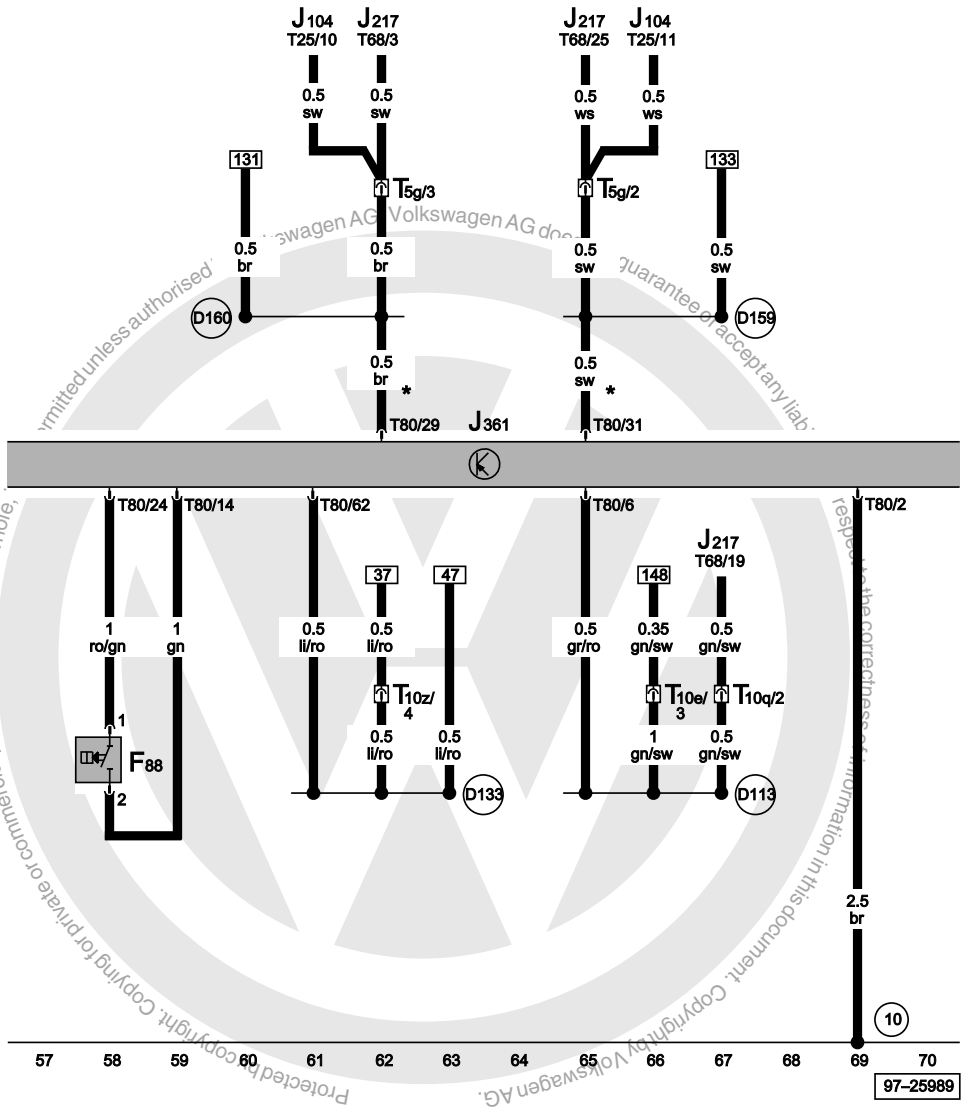

Simos control unit, power assisted steering pressure switch

F88	Power assisted steering pressure switch
J104	ABS with EDL control unit
J217	Automatic gearbox control unit
J361	Simos control unit
T5g	5-pin connector, pink, in protective housing for connectors
T10e	10-pin connector, green, in protective housing for connectors
T10q	10-pin connector, blue, in protective housing for connectors
T10z	10-pin connector
T25	25-pin connector
T68	68-pin connector
T80	80-pin connector
10	Earth point, in plenum chamber
D113	Connection -11-, in engine compartment wiring harness
D133	Connection (hall sender signal), in engine compartment wiring harness
D159	Positive (+) connection (high bus), in engine compartment wiring harness
D160	Positive (+) connection (low bus), in engine compartment wiring harness
*	Data wire

ws	=	white
sw	=	black
ro	=	red
br	=	brown
gn	=	green
bl	=	blue
gr	=	grey
li	=	purple
ge	=	yellow
or	=	orange
rs	=	pink

Protected by copyright. Copying for private or commercial purposes, in part or in whole, is not permitted unless authorised by Volkswagen AG. Volkswagen AG does not guarantee or accept any liability with respect to the correctness of information in this document. Copyright by Volkswagen AG.

satelettronica

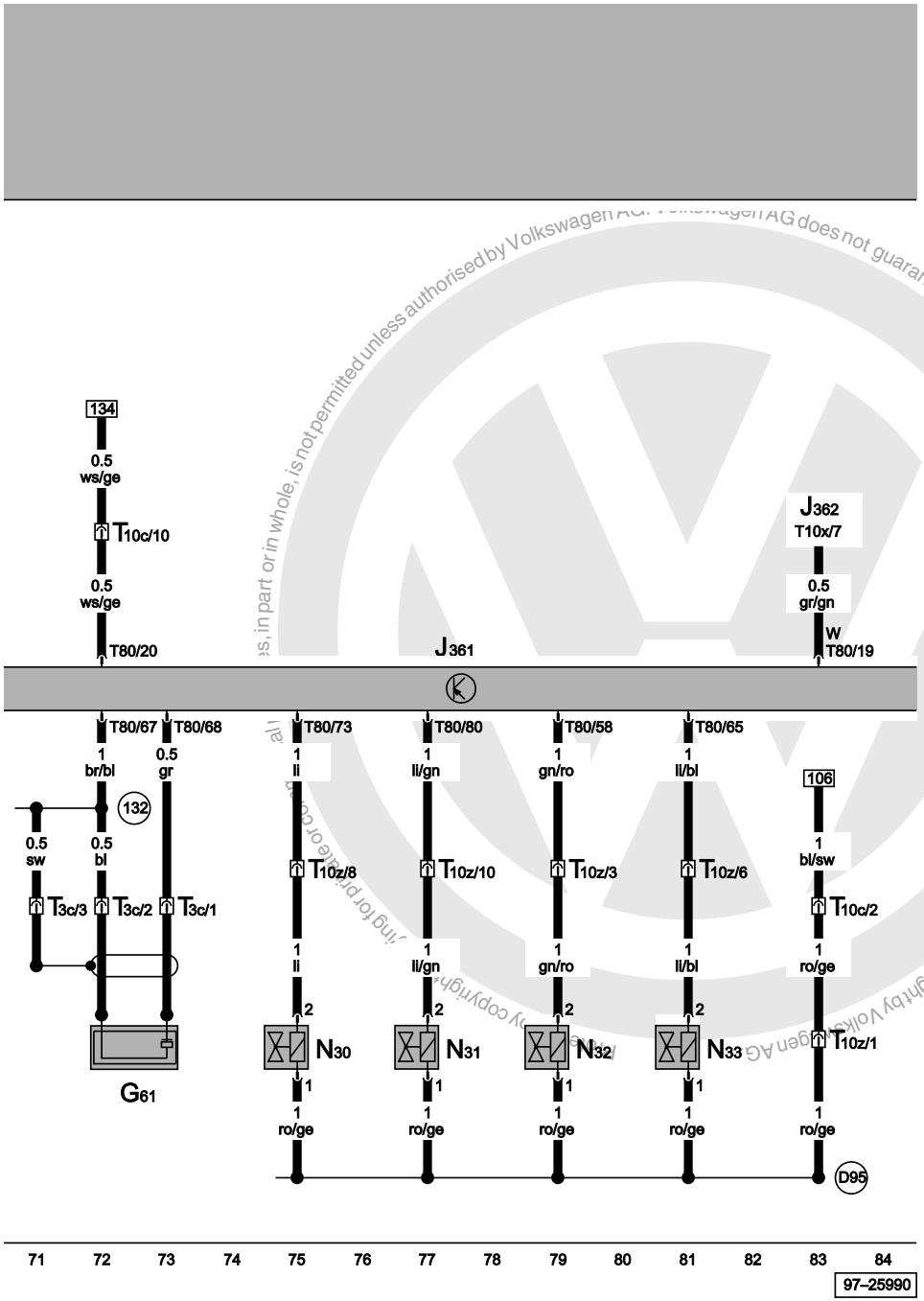

Simos control unit, knock sensor 1, injector cylinder 1, injector cylinder 2, injector cylinder 3, injector cylinder 4

G61	Knock sensor I
J361	Simos control unit
J362	Immobilizer control unit
N30	Injector, cylinder 1
N31	Injector, cylinder 2
N32	Injector, cylinder 3
N33	Injector, cylinder 4
T3c	3-pin connector
T10c	10-pin connector, brown, in protective housing for connectors
T10x	10-pin connector
T10z	10-pin connector
T80	80-pin connector
132	Earth connection -3-, in engine compartment wiring harness
D95	Connection (injectors), in engine compartment wiring harness

ws	=	white
sw	=	black
ro	=	red
br	=	brown
gn	=	green
bl	=	blue
gr	=	grey
li	=	purple
ge	=	yellow
or	=	orange
rs	=	pink

satelettronica

Simos control unit, lambda probe, air mass meter, intake manifold change-over valve, lambda probe heater

G39	Lambda probe
G70	Air mass meter
J217	Automatic gearbox control unit
J361	Simos control unit
N156	Intake manifold change-over valve
T4e	4-pin connector, in engine
T10q	10-pin connector, blue, in protective housing for connectors
T10z	10-pin connector
T68	68-pin connector
T80	80-pin connector
Z19	Lambda probe heater
D80	Positive (+) connection (87a - for active. charcoal filter system solenoid), in engine compartment wiring harness

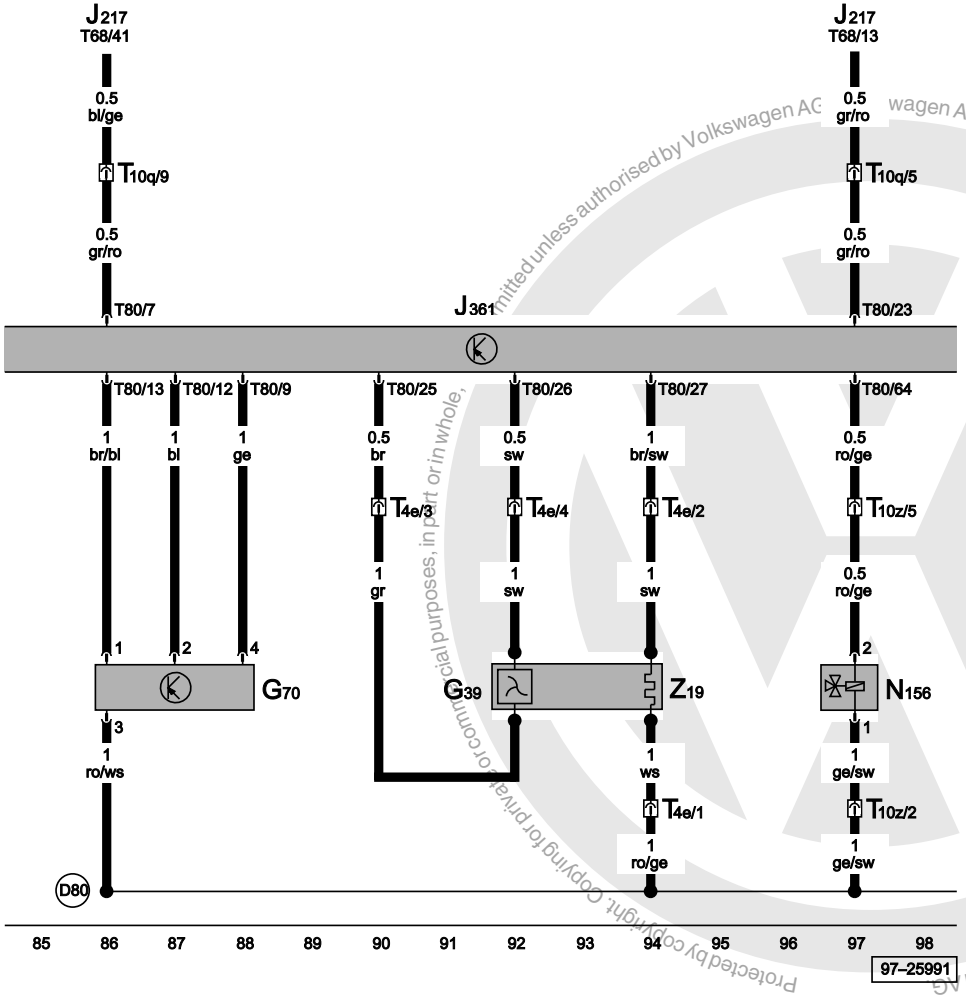

ws	=	white
sw	=	black
ro	=	red
br	=	brown
gn	=	green
bl	=	blue
gr	=	grey
li	=	purple
ge	=	yellow
or	=	orange
rs	=	pink

Protected by copyright. Copying for private or commercial purposes, in part or in whole, is not permitted unless authorised by Volkswagen AG. Volkswagen AG does not guarantee or accept any liability with respect to the correctness of information in this document. Copyright by Volkswagen AG

satelettronica

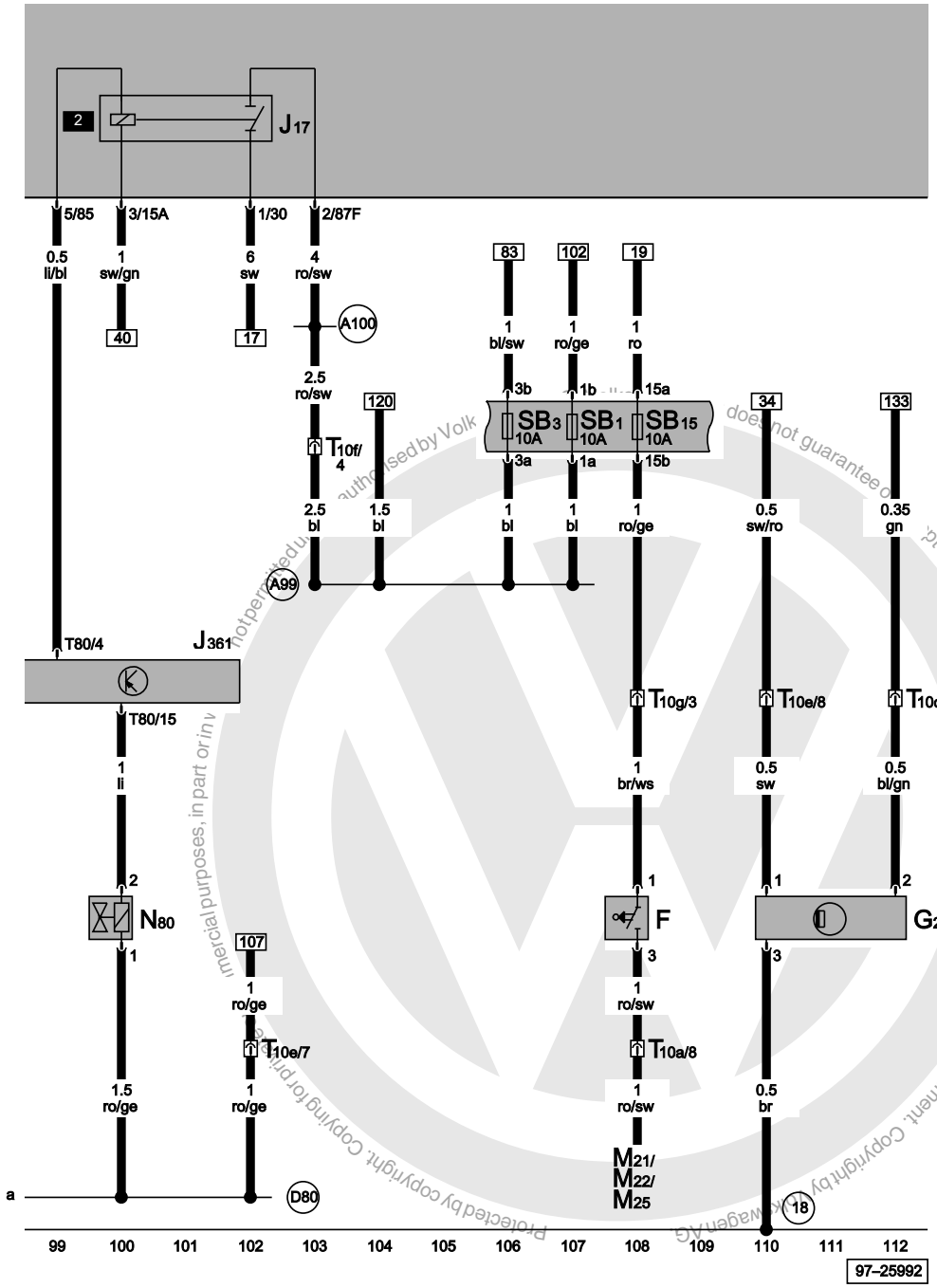

Simos control unit, brake light switch, speedometer sender (hall sender, on gearbox), activated charcoal filter system solenoid valve 1 (pulsed), fuel pump relay

F	Brake light switch
G22	Speedometer sender (hall sender, on gearbox)
J17	Fuel pump relay
J361	Simos control unit
M21	Brake and tail light bulb, left
M22	Brake and tail light bulb, right
M25	High level brake light bulb
N80	Activated charcoal filter system solenoid valve 1 (pulsed)
SB1	Fuse -1- on fuse box
SB3	Fuse -3- on fuse box
SB15	Fuse -15- on fuse box
T10a	10-pin connector, black, in protective housing for connectors
T10c	10-pin connector, brown, in protective housing for connectors
T10e	10-pin connector, green, in protective housing for connectors
T10f	10-pin connector, purple, in protective housing for connectors
T10g	10-pin connector, red, in protective housing for connectors
T80	80-pin connector
18	Earth point, on engine block
A99	Connection -1- (87), in dash panel wiring harness
A100	Connection -2- (87), in dash panel wiring harness
D80	Positive (+) connection (87a - for active. charcoal filter system solenoid), in engine compartment wiring harness

ws	=	white
sw	=	black
ro	=	red
br	=	brown
gn	=	green
bl	=	blue
gr	=	grey
li	=	purple
ge	=	yellow
or	=	orange
rs	=	pink

satelettronica

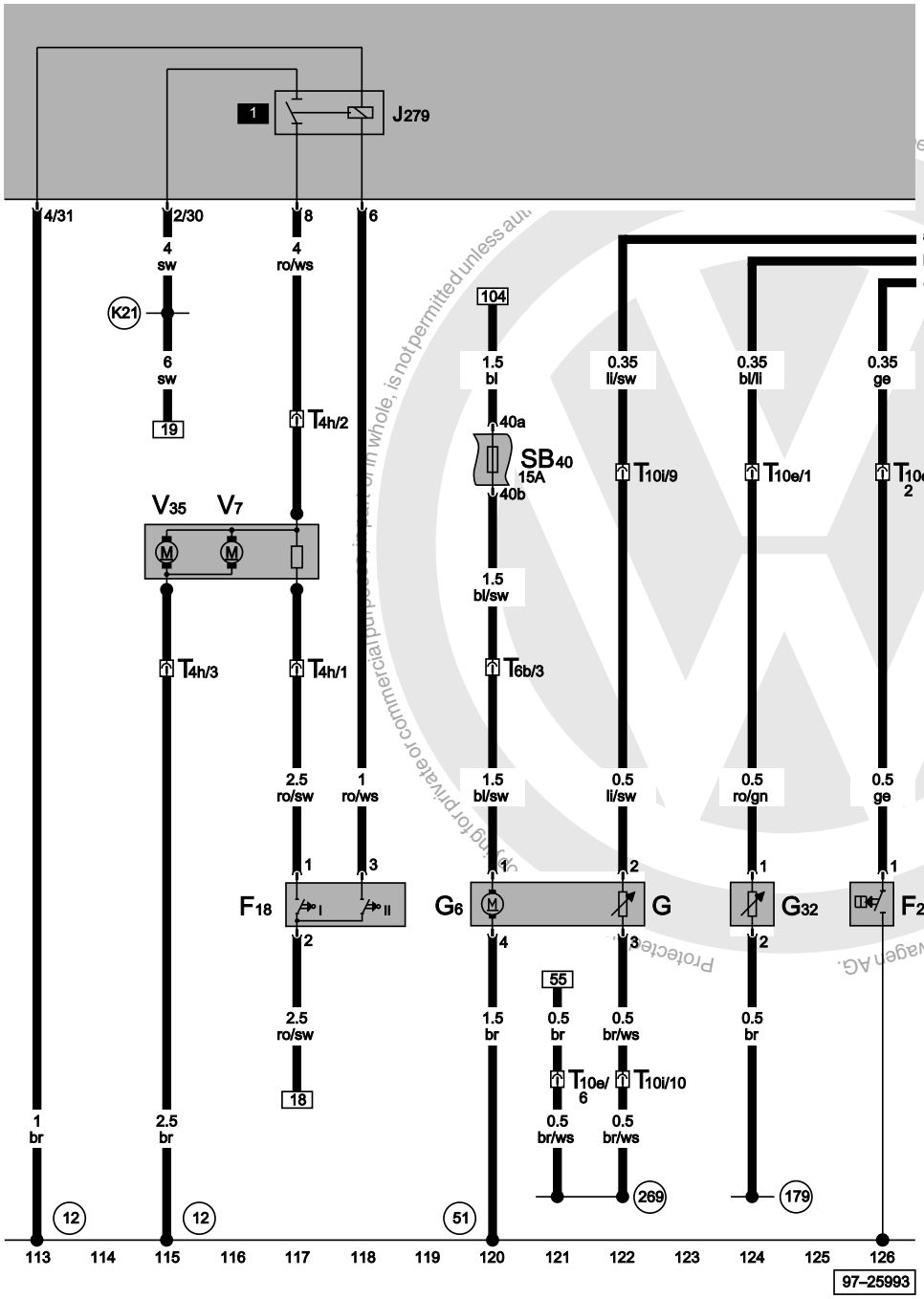

Radiator fan thermo-switch, oil pressure switch (0.3 bar), fuel gauge sender, fuel pump (pre-supply pump), coolant shortage indicator sender

F18	Radiator fan thermo-switch
F22	Oil pressure switch (0.3 bar)
G	Fuel gauge sender
G6	Fuel pump (pre-supply pump)
G32	Coolant shortage indicator sender
J279	Radiator fan V7 and V35 relay, 1st speed
SB40	Fuse -40- on fuse box
T4h	4-pin connector, black, in radiator
T6b	6-pin connector, grey, in protective housing for connectors
T10e	10-pin connector, green, in protective housing for connectors
T10i	10-pin connector, orange, in protective housing for connectors
V7	Radiator fan
V35	Radiator fan, right
12	Earth point, in engine compartment, left
51	Earth point, in right luggage compartment
179	Earth connection, in left headlight wiring harness
269	Earth connection (sender earth) -1-, in dash panel wiring harness
K21	Connection -1-, in radiator fan wiring harness

ws	=	white
sw	=	black
ro	=	red
br	=	brown
gn	=	green
bl	=	blue
gr	=	grey
li	=	purple
ge	=	yellow
or	=	orange
rs	=	pink

satelettronica

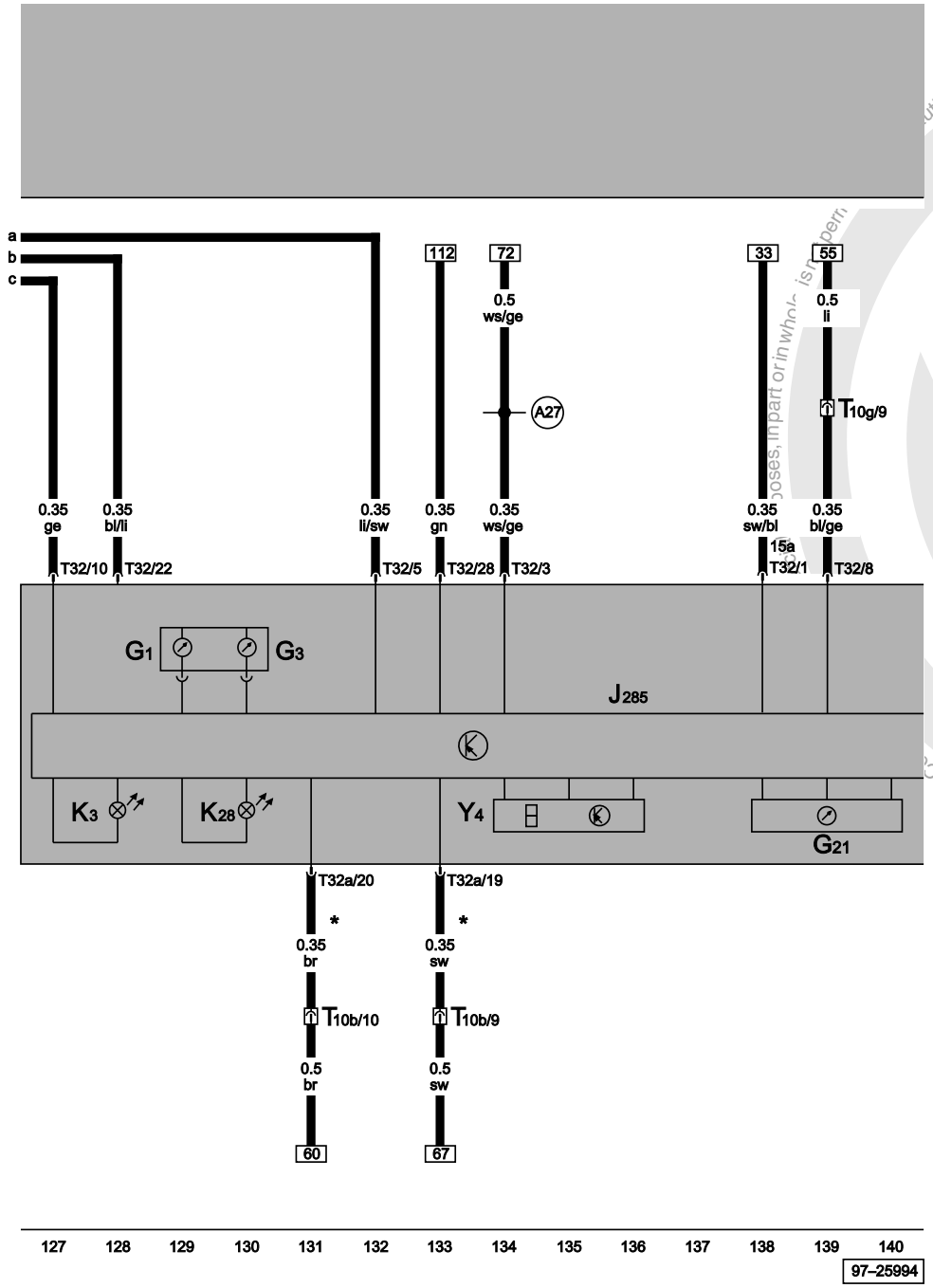

Control unit with display in dash panel insert, fuel gauge, coolant temperature gauge, speedometer, oil pressure warning lamp, coolant temperature/coolant shortage warning lamp

G1	Fuel gauge
G3	Coolant temperature gauge
G21	Speedometer
J285	Control unit with display in dash panel insert
K3	Oil pressure warning lamp
K28	Coolant temperature/coolant shortage warning lamp
T10b	10-pin connector, white, in protective housing for connectors
T10g	10-pin connector, red, in protective housing for connectors
T32	32-pin connector, blue
T32a	32-pin connector, green
Y4	Odometer display
(A27)	Connection (speed signal), in dash panel wiring harness
*	Data wire

ws	=	white
sw	=	black
ro	=	red
br	=	brown
gn	=	green
bl	=	blue
gr	=	grey
li	=	purple
ge	=	yellow
or	=	orange
rs	=	pink

Protected by copyright. Copyright by Volkswagen AG. Authorised by Volkswagen AG. Volkswagen AG does not guarantee or accept any liability with respect to the correctness of information in this document.
satelettronica

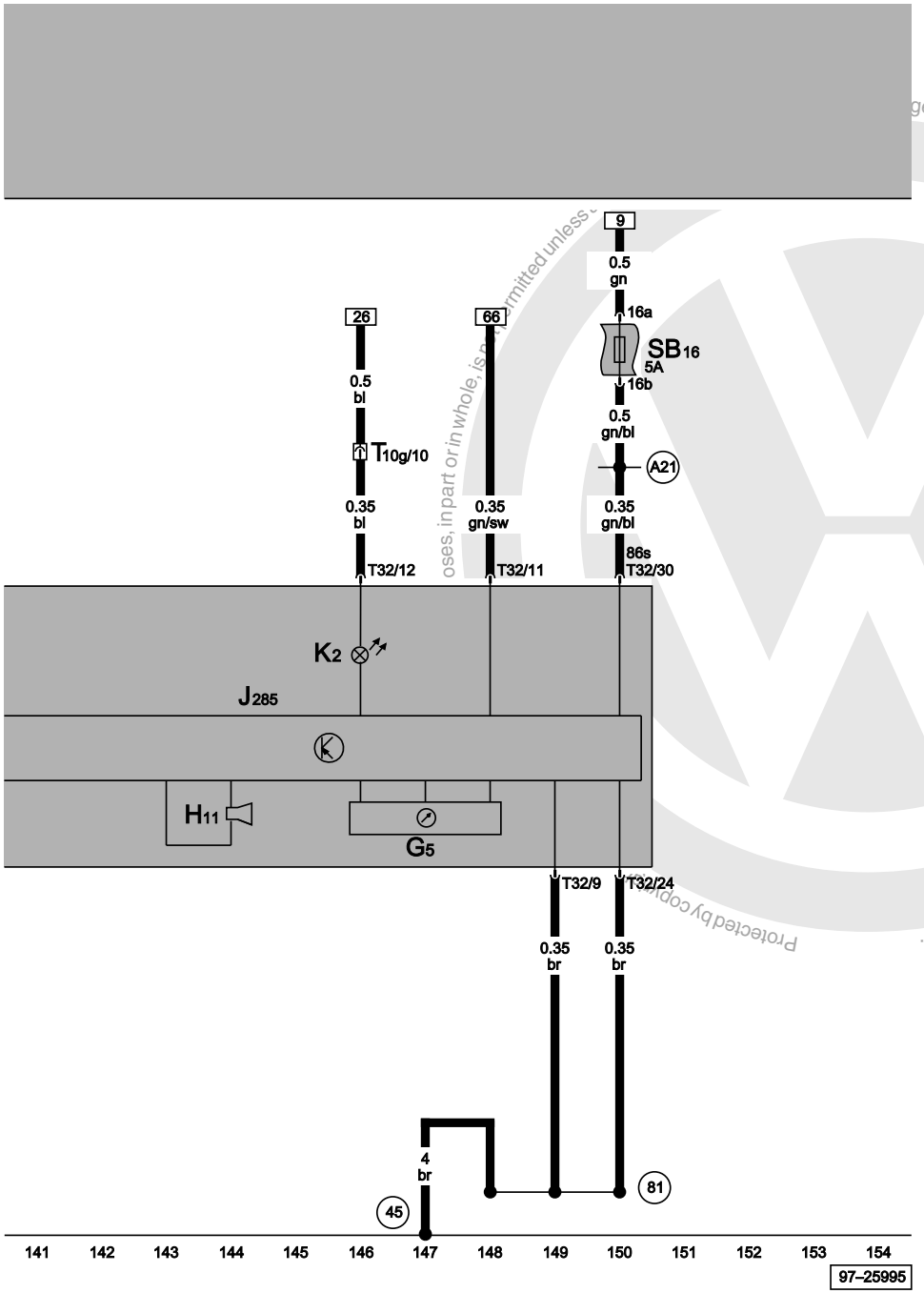

Control unit with display in dash panel insert, rev. counter, oil pressure warning buzzer, alternator warning lamp

G5	Rev. counter
H11	Oil pressure warning buzzer
J285	Control unit with display in dash panel insert
K2	Alternator warning lamp
SB16	Fuse -16- on fuse box
T10g	10-pin connector, red, in protective housing for connectors
T32	32-pin connector, blue
45	Earth point, behind dash panel - centre
81	Earth connection -1-, in dash panel wiring harness
A21	Connection (86s), in dash panel wiring harness

ws	=	white
sw	=	black
ro	=	red
br	=	brown
gn	=	green
bl	=	blue
gr	=	grey
li	=	purple
ge	=	yellow
or	=	orange
rs	=	pink

Protected by copyright. Copyright by Volkswagen AG. Volkswagen AG does not guarantee or accept any liability with respect to the correctness of information in this document. Copyright by Volkswagen AG. Reproduced in whole or in part or in whole, is permitted unless

satelettronica

Protected by copyright. Copying for private or commercial purposes, in part or in whole, is not permitted unless authorised by Volkswagen AG. Volkswagen AG does not guarantee or accept any liability with respect to the correctness of information in this document. Copyright by Volkswagen AG.

1.4 l/44 kW Motronic, engine codes AKK/ANW

From October 1999

1.4 l/44 kW Motronic, engine codes AKK, from October 1999

For alternatives to relay and fuse positions as well as multi-pin connector wiring - see "Fitting locations" section.

Relay locations on relay plate:

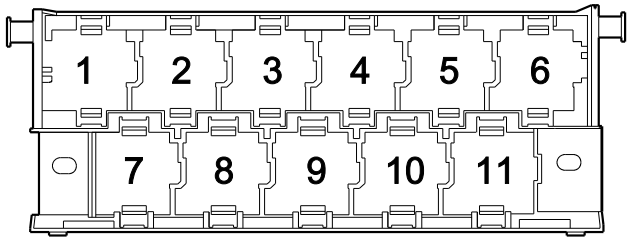

97--25507

2 - Fuel pump relay (167)
4 - Fuel shut-off control unit (405)
6 - X contact relief relay (100)

Note:

- *The number in brackets behind the part designation denotes the control number on the housing.*

Fuse colours

30 A - green
25 A - white
20 A - yellow
15 A - blue
10 A - red
7.5 A - brown
5 A - beige
3 A - purple

satelettronica

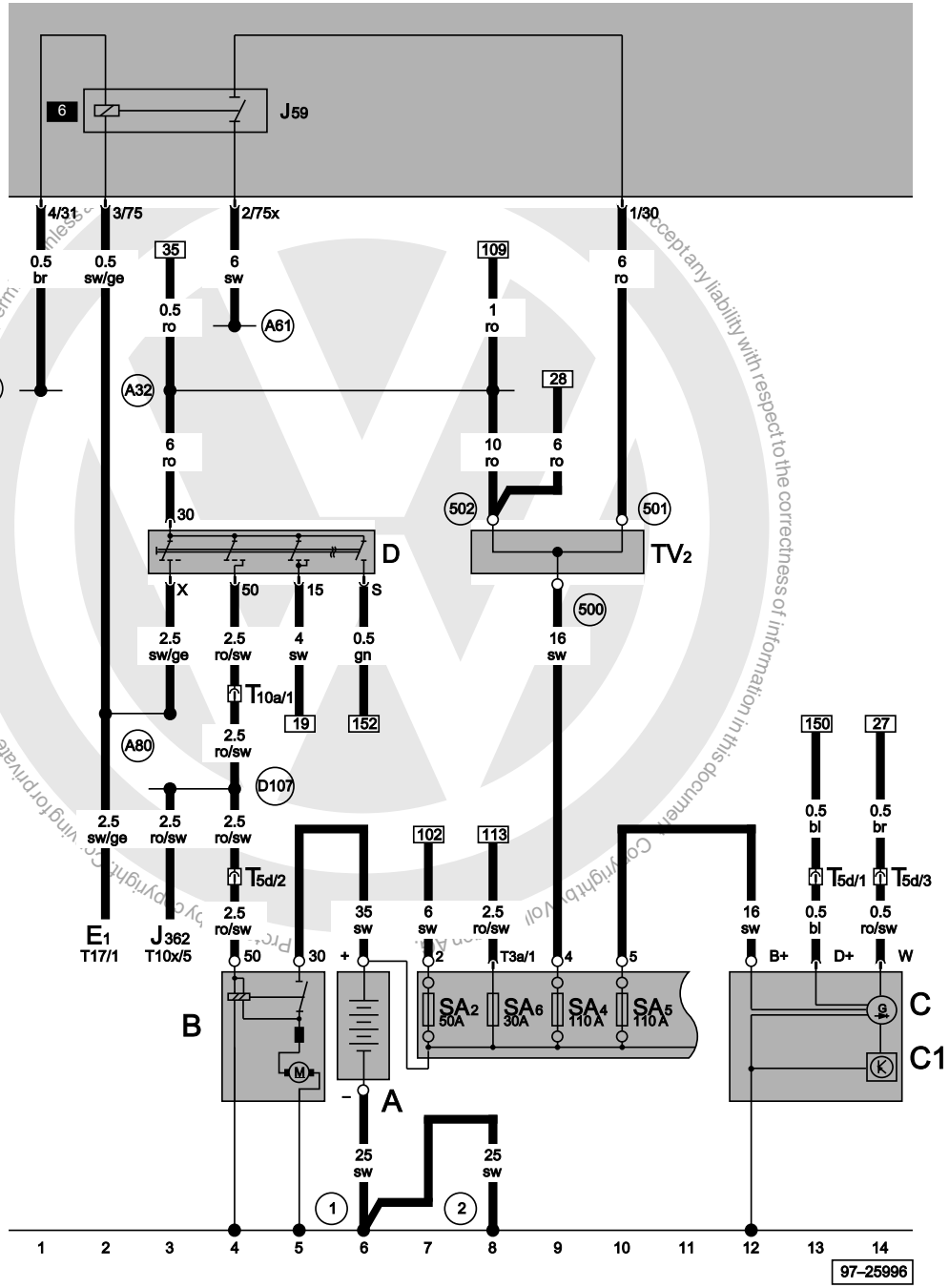

Battery, starter, alternator, voltage regulator, ignition/ starter switch, terminal 30 junction box, X contact relief relay

A	Battery
B	Starter
C	Alternator
C1	Voltage regulator
D	Ignition/starter switch
E1	Lighting switch
J59	X contact relief relay
J362	Immobilizer control unit
SA2	Fuse -2- on battery fuse box
SA4	Fuse -4- on battery fuse box
SA5	Fuse -5- on battery fuse box
SA6	Fuse -6- on battery fuse box
TV2	Terminal 30 junction box
T3a	3-pin connector, in battery
T5d	5-pin connector, in engine, near gearbox
T10a	10-pin connector, black, in protective housing for connectors
T10x	10-pin connector
T17	17-pin connector
1	Earth strap, battery - body
2	Earth strap, gearbox - body
80	Earth connection -1-, in instruments wiring harness
500	Screw connection -1- (30), on relay plate
501	Screw connection -2- (30), on relay plate
502	Screw connection -1- (30a), on relay plate
A32	Positive (+) connection (30), in dash panel wiring harness
A61	Positive (+) connection (X), in instruments wiring harness
A80	Connection -1- (X), in dash panel wiring harness
D107	Connection -5-, in engine compartment wiring harness

ws	=	white
sw	=	black
ro	=	red
br	=	brown
gn	=	green
bl	=	blue
gr	=	grey
li	=	purple
ge	=	yellow
or	=	orange
rs	=	pink

satelettronica

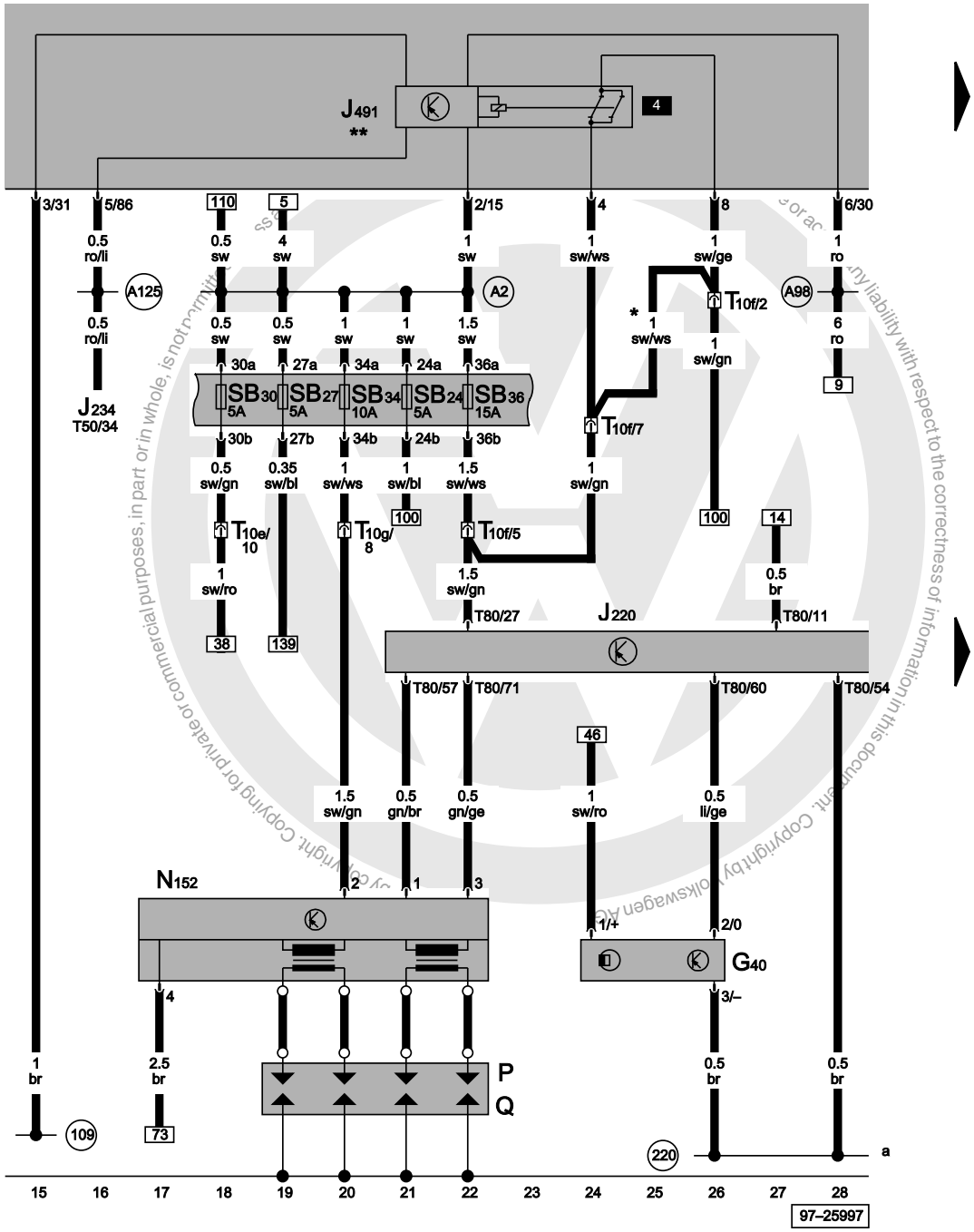

Motronic control unit, hall sender, ignition transformer, spark plug connector, spark plugs, fuel shut-off control unit (crash)

G40	Hall sender
J220	Motronic control unit
J234	Airbag control unit
J491	Fuel shut-off control unit (crash)
N152	Ignition transformer
P	Spark plug connector
Q	Spark plugs
SB24	Fuse -24- on fuse box
SB27	Fuse -27- on fuse box
SB30	Fuse -30- on fuse box
SB34	Fuse -34- on fuse box
SB36	Fuse -36- on fuse box
T10e	10-pin connector, green, in protective housing for connectors
T10f	10-pin connector, purple, in protective housing for connectors
T10g	10-pin connector, red, in protective housing for connectors
T50	50-pin connector
T80	80-pin connector
109	Earth connection, in airbag wiring harness
220	Earth connection (sender earth), in engine wiring harness
A2	Positive (+) connection (15), in dash panel wiring harness
A98	Positive (+) connection -4- (30), in dash panel wiring harness
A125	Connection (crash signal), in dash panel wiring harness
*	Does not apply to airbag
**	Only models with airbag

ws	=	white
sw	=	black
ro	=	red
br	=	brown
gn	=	green
bl	=	blue
gr	=	grey
li	=	purple
ge	=	yellow
or	=	orange
rs	=	pink

satelettronica

Motronic control unit, engine speed sender, intake air temperature sender, intake manifold pressure sender, exhaust gas recirculation frequency valve

G28	Engine speed sender
G42	Intake air temperature sender
G71	Intake manifold pressure sender
J220	Motronic control unit
N121	Exhaust gas recirculation frequency valve
SB31	Fuse -31-on fuse box
T10f	10-pin connector, purple, in protective housing for connectors
T14	14-pin connector, in engine
T14a	14-pin connector, in engine
T80	80-pin connector
220	Earth connection (sender earth), in engine wiring harness
B113	Positive (+) connection (30a), in left interior wiring harness
D101	Connection -1-, in engine compartment wiring harness
*	Specific export versions

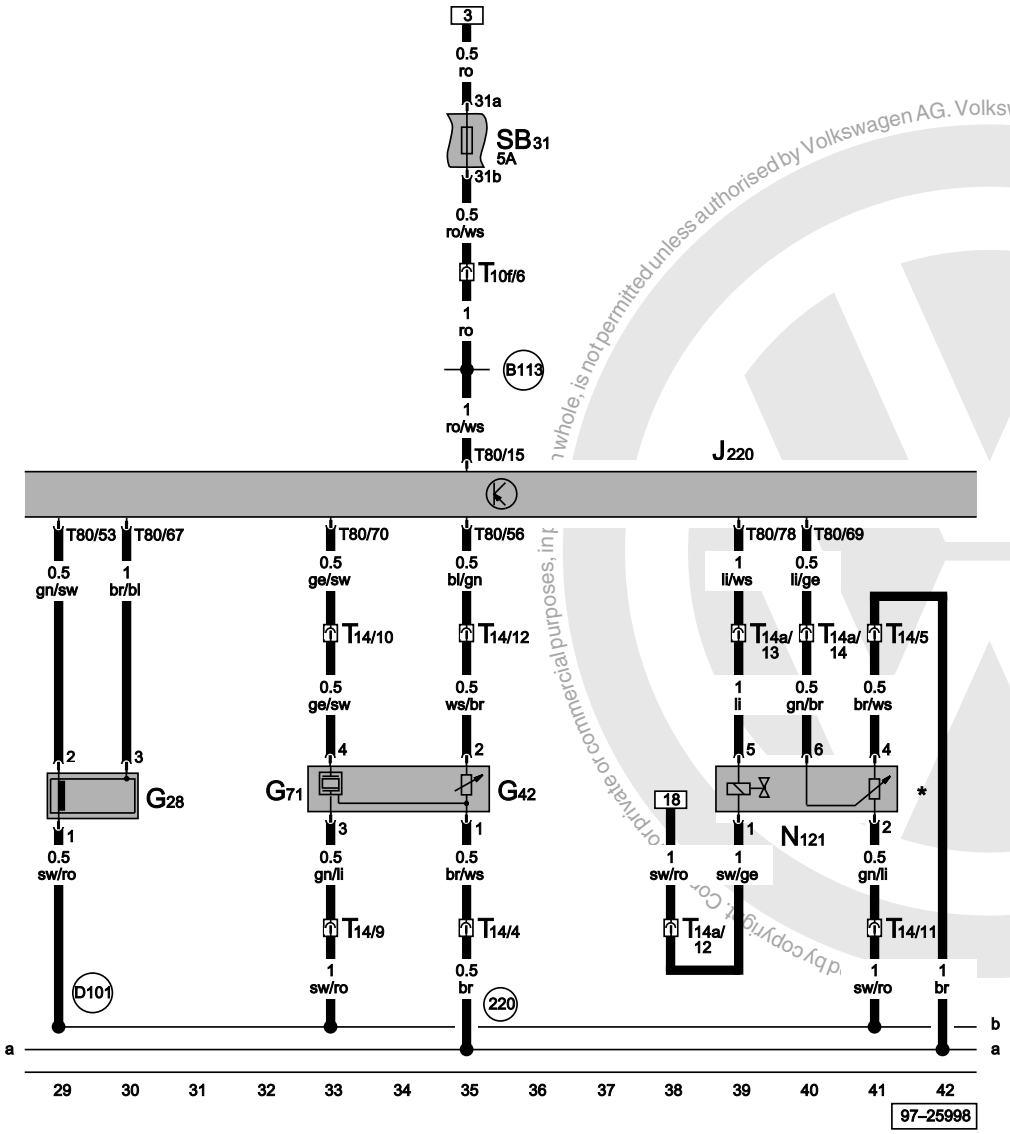

ws	=	white
sw	=	black
ro	=	red
br	=	brown
gn	=	green
bl	=	blue
gr	=	grey
li	=	purple
ge	=	yellow
or	=	orange
rs	=	pink

satelettronica

Motronic control unit, coolant temperature sender, knock sensor I

G2	Coolant temperature sender
G61	Knock sensor I
G62	Coolant temperature sender
J220	Motronic control unit
T14a	14-pin connector, in engine
T80	80-pin connector
(220)	Earth connection (sender earth), in engine wiring harness
(D101)	Connection -1-, in engine compartment wiring harness
*	Specific export versions

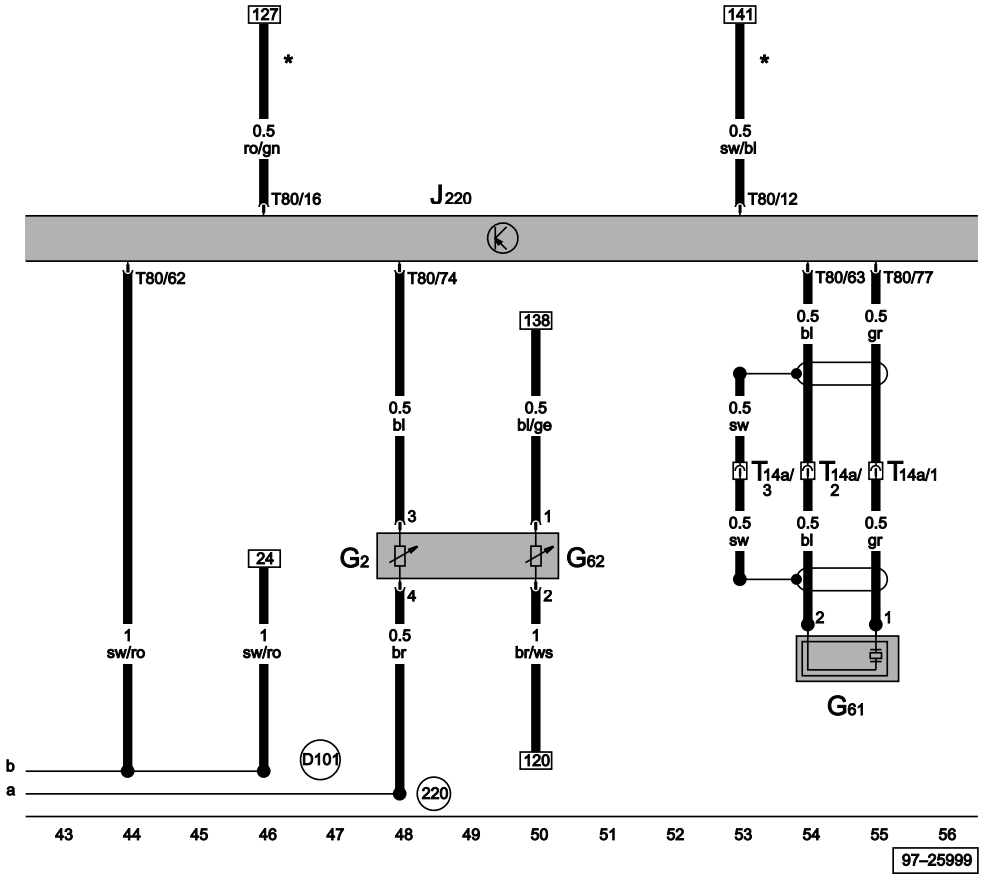

ws	=	white
sw	=	black
ro	=	red
br	=	brown
gn	=	green
bl	=	blue
gr	=	grey
li	=	purple
ge	=	yellow
or	=	orange
rs	=	pink

Protected by copyright. Copying for private or commercial purposes, in part or in whole, is not permitted unless authorised by Volkswagen AG. Volkswagen AG does not guarantee or accept any liability with respect to the correctness of information in this document. Copyright by Volkswagen AG.
satelettronica

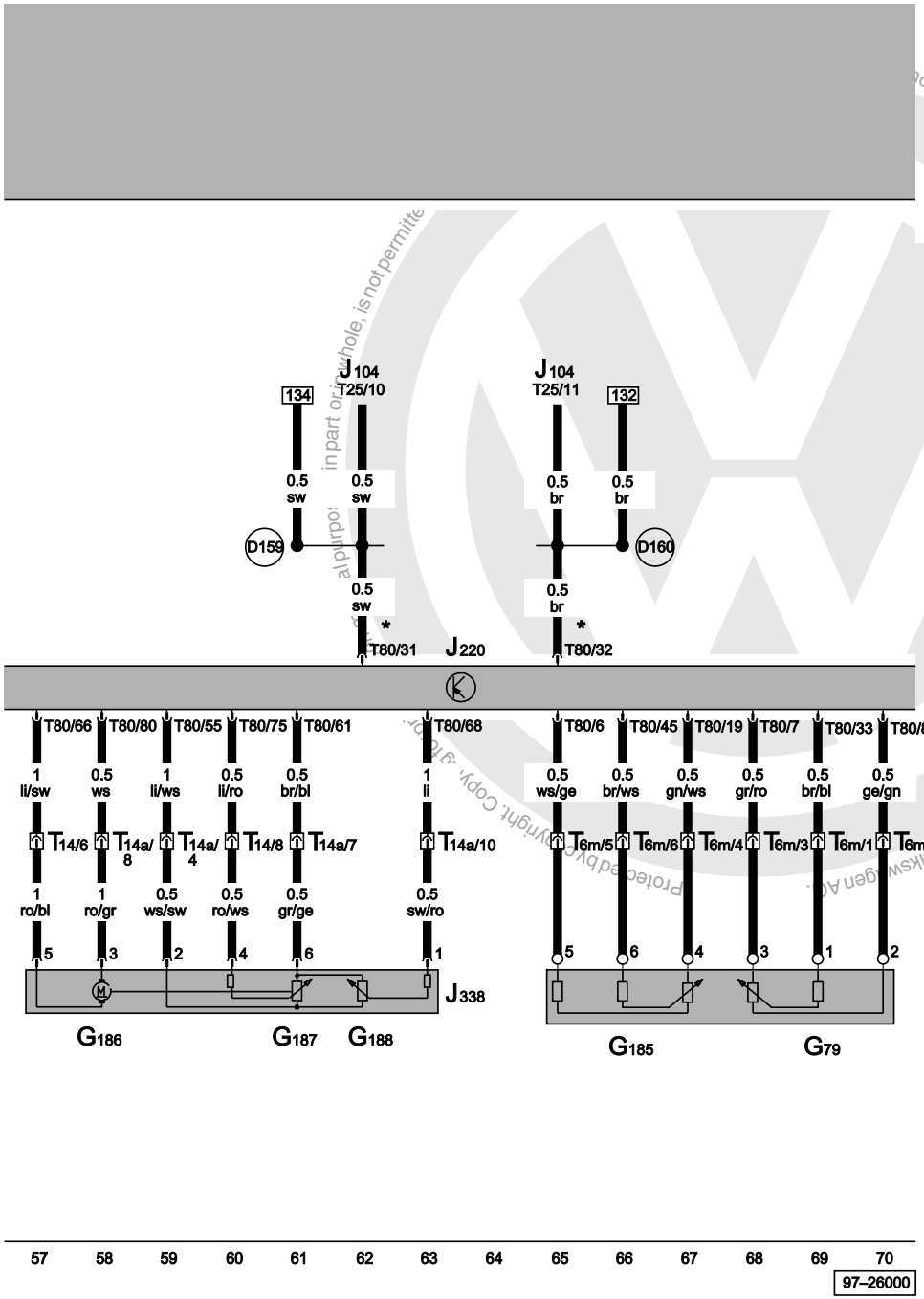

Motronic control unit, throttle valve control unit, accelerator pedal position sender, accelerator pedal position sender -2-, throttle valve drive (electric throttle operation)

G79	Accelerator pedal position sender
G185	Accelerator pedal position sender -2-
G186	Throttle valve drive (electric throttle operation)
G187	Throttle valve drive angle sender -1- (electric throttle operation)
G188	Throttle valve drive angle sender -2- (electric throttle operation)
J104	ABS with EDL control unit
J220	Motronic control unit
J338	Throttle valve control unit
T6m	6-pin connector
T14	14-pin connector, in engine
T14a	14-pin connector, in engine
T25	25-pin connector
T80	80-pin connector
D159	Positive (+) connection (high bus), in engine compartment wiring harness
D160	Positive (+) connection (low bus), in engine compartment wiring harness
*	Data wire

ws	=	white
sw	=	black
ro	=	red
br	=	brown
gn	=	green
bl	=	blue
gr	=	grey
li	=	purple
ge	=	yellow
or	=	orange
rs	=	pink

satelettronica

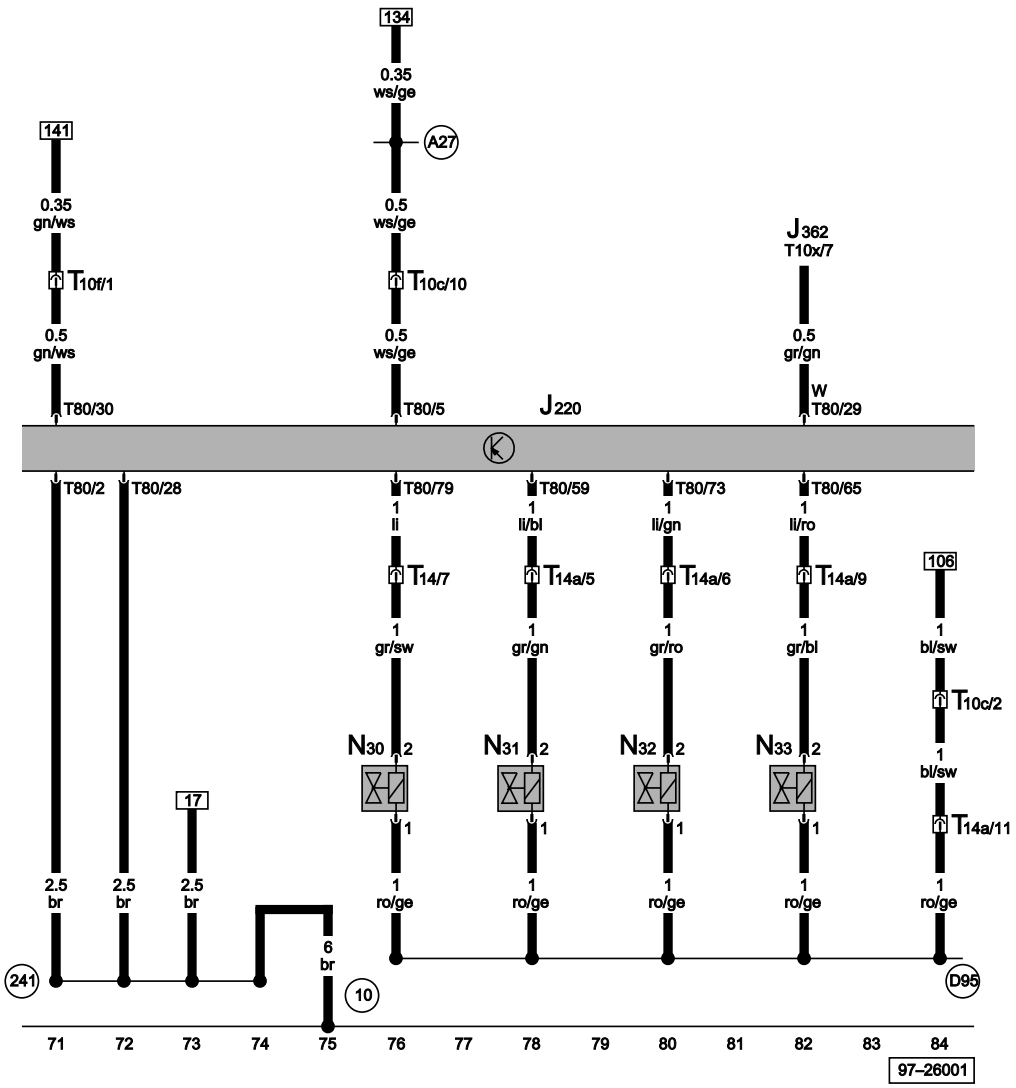

Motronic control unit, injectors

J220	Motronic control unit
J362	Immobilizer control unit
N30	Injector, cylinder 1
N31	Injector, cylinder 2
N32	Injector, cylinder 3
N33	Injector, cylinder 4
T10c	10-pin connector, brown, in protective housing for connectors
T10f	10-pin connector, purple, in protective housing for connectors
T10x	10-pin connector
T14	14-pin connector, in engine
T14a	14-pin connector, in engine
T80	80-pin connector
10	Earth point, in plenum chamber
241	Earth connection -2-, engine earth, in engine wiring harness
A27	Connection (speed signal), in dash panel wiring harness
D95	Connection (injectors), in engine compartment wiring harness

ws	=	white
sw	=	black
ro	=	red
br	=	brown
gn	=	green
bl	=	blue
gr	=	grey
li = purple
ge = yellow
or = orange
rs = pink

Protected by copyright. Copying for private or commercial purposes, in part or in whole, is not permitted unless authorised by Volkswagen AG. Volkswagen AG does not guarantee or accept any liability with respect to the correctness of information in this document. Copyright by Volkswagen AG.
satelettronica

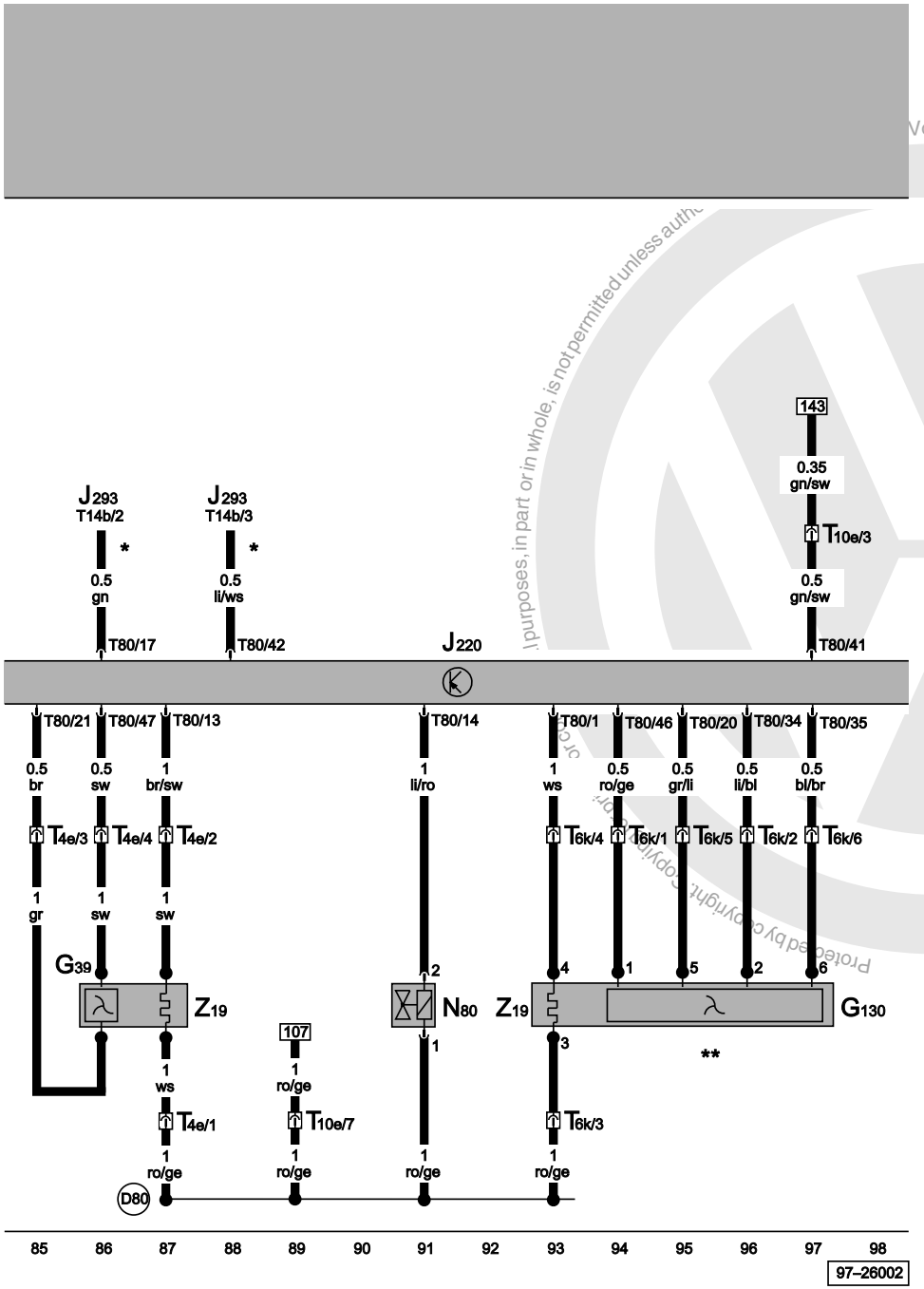

Motronic control unit, lambda probe, lambda probe downstream of catalytic converter, lambda probe heater, activated charcoal filter system solenoid valve 1 (pulsed)

G39	Lambda probe
G130	Lambda probe downstream of catalytic converter
J220	Motronic control unit
J293	Radiator fan control unit
N80	Activated charcoal filter system solenoid valve 1 (pulsed)
T4e	4-pin connector, in engine
T6k	6-pin connector, in exhaust pipe
T10e	10-pin connector, green, in protective housing for connectors
T14b	14-pin connector, in engine compartment, left
T80	80-pin connector
Z19	Lambda probe heater
D80	Positive (+) connection (87a - for active. charcoal filter system solenoid), in engine compartment wiring harness
*	Only models with air conditioner
**	Specific export versions

ws	=	white
sw	=	black
ro	=	red
br	=	brown
gn	=	green
bl	=	blue
gr	=	grey
li	=	purple
ge	=	yellow
or	=	orange
rs	=	pink

Volkswagen AG does not guarantee or accept any liability with respect to the correctness of information in this document. Copyright by Volkswagen AG. Protected by copyright. Copying for private or commercial purposes, in part or in whole, is not permitted unless authorised by Volkswagen AG.
satelettronica

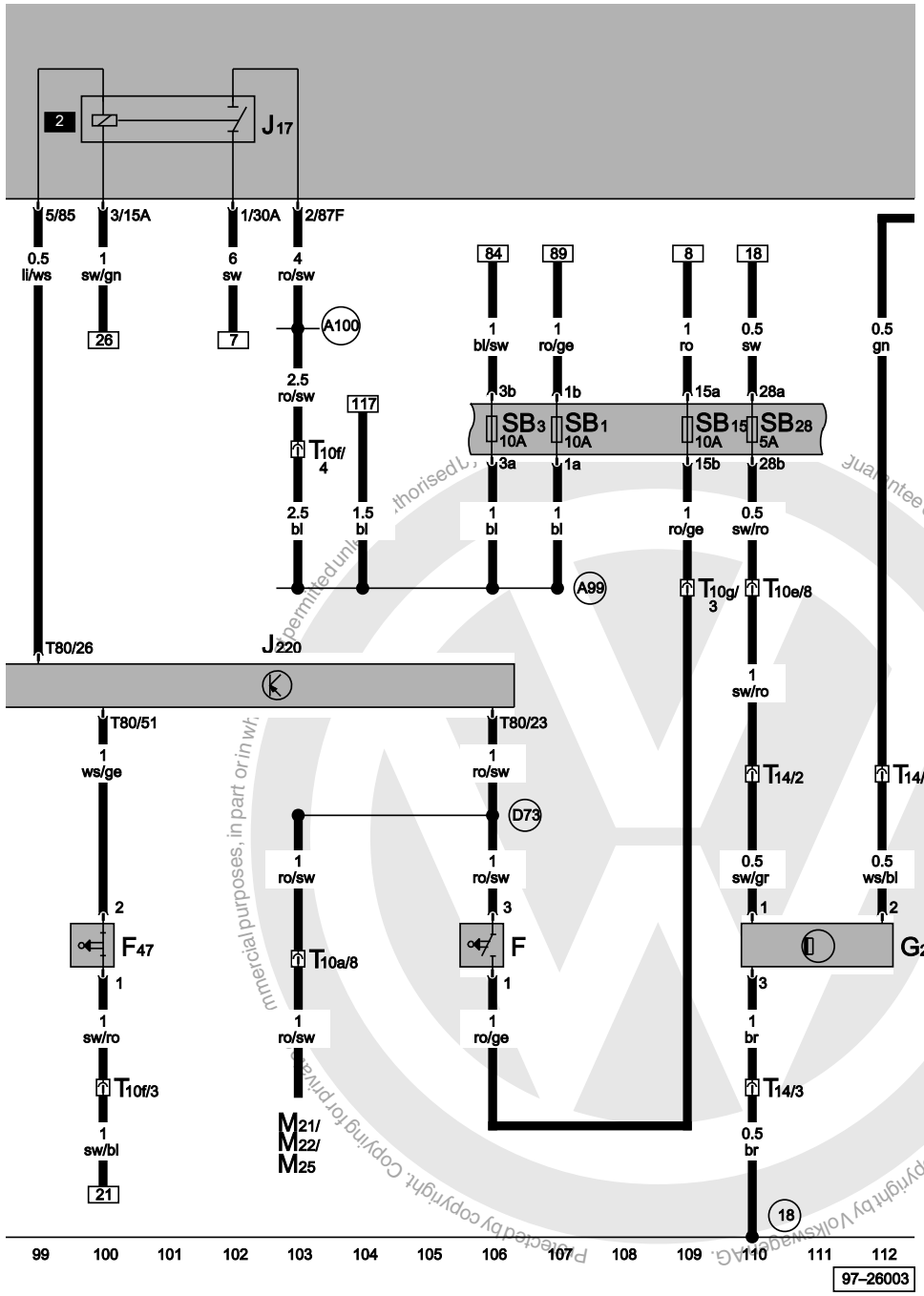

Motronic control unit, brake light switch, cruise control system brake pedal switch (diesel direct injection system), speedometer sender (hall sender, on gearbox), fuel pump relay

F	Brake light switch
F47	Cruise control system brake pedal switch (diesel direct injection system)
G22	Speedometer sender (Hall sender, on gearbox)
J17	Fuel pump relay
J220	Motronic control unit
M21	Brake and tail light bulb, left
M22	Brake and tail light bulb, right
M25	High level brake light bulb
SB1	Fuse -1- on fuse box
SB3	Fuse -3- on fuse box
SB15	Fuse -15- on fuse box
SB28	Fuse -28- on fuse box
T10a	10-pin connector, black, in protective housing for connectors
T10e	10-pin connector, green, in protective housing for connectors
T10f	10-pin connector, purple, in protective housing for connectors
T10g	10-pin connector, red, in protective housing for connectors
T14	14-pin connector, in engine
T80	80-pin connector
18	Earth point, on engine block
A99	Connection -1- (87), in dash panel wiring harness
A100	Connection -2- (87), in dash panel wiring harness
D73	Positive (+) connection (54), in engine compartment wiring harness

ws	=	white
sw	=	black
ro	=	red
br	=	brown
gn	=	green
bl	=	blue
gr	=	grey
li	=	purple
ge	=	yellow
or	=	orange
rs	=	pink

satelettronica

Protected by copyright. Copying for private or commercial purposes, in part or in whole, is not permitted unless authorised by Volkswagen AG. Volkswagen AG does not guarantee or accept any liability with respect to the correctness of information in this document. Copyright by Volkswagen AG.

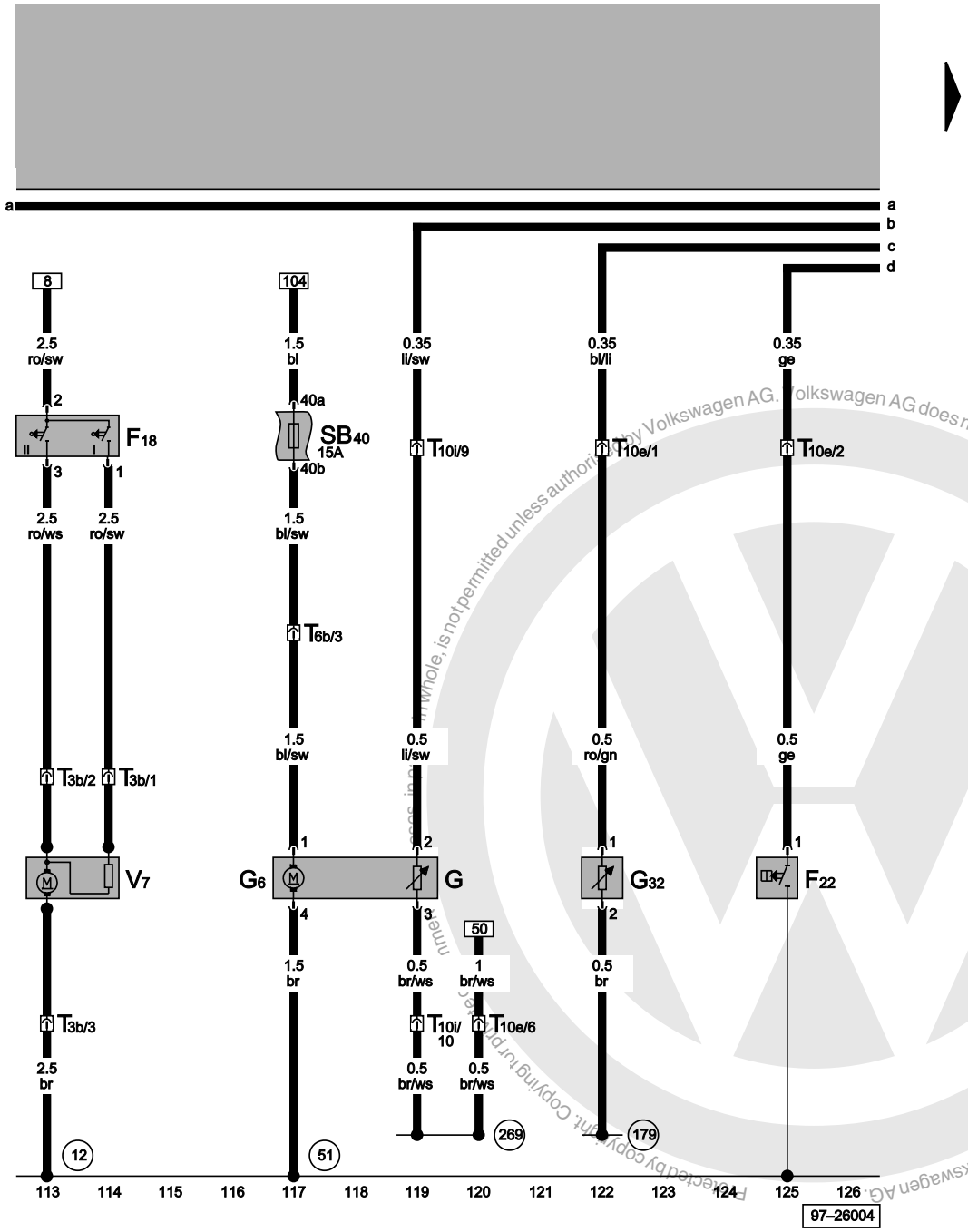

Radiator fan thermo-switch, oil pressure switch (0.3 bar), fuel gauge sender, fuel pump (pre-supply pump), coolant shortage indicator sender

F18	Radiator fan thermo-switch
F22	Oil pressure switch (0.3 bar)
G	Fuel gauge sender
G6	Fuel pump (pre-supply pump)
G32	Coolant shortage indicator sender
SB40	Fuse -40- on fuse box
T3b	3-pin connector, in engine compartment, front left
T6b	6-pin connector, grey, in protective housing for connectors
T10e	10-pin connector, green, in protective housing for connectors
T10i	10-pin connector, orange, in protective housing for connectors
V7	Radiator fan
12	Earth point, in engine compartment, left
51	Earth point, in right luggage compartment
179	Earth connection, in left headlight wiring harness
269	Earth connection (sender earth) -1-, in dash panel wiring harness

ws	=	white
sw	=	black
ro	=	red
br	=	brown
gn	=	green
bl	=	blue
gr	=	grey
li	=	purple
ge	=	yellow
or	=	orange
rs	=	pink

Protected by copyright. Copying for private or commercial purposes, in part or in whole, is not permitted unless authorised by Volkswagen AG. Volkswagen AG does not guarantee or accept any liability with respect to the correctness of information in this document. Copyright by Volkswagen AG.

satelettronica

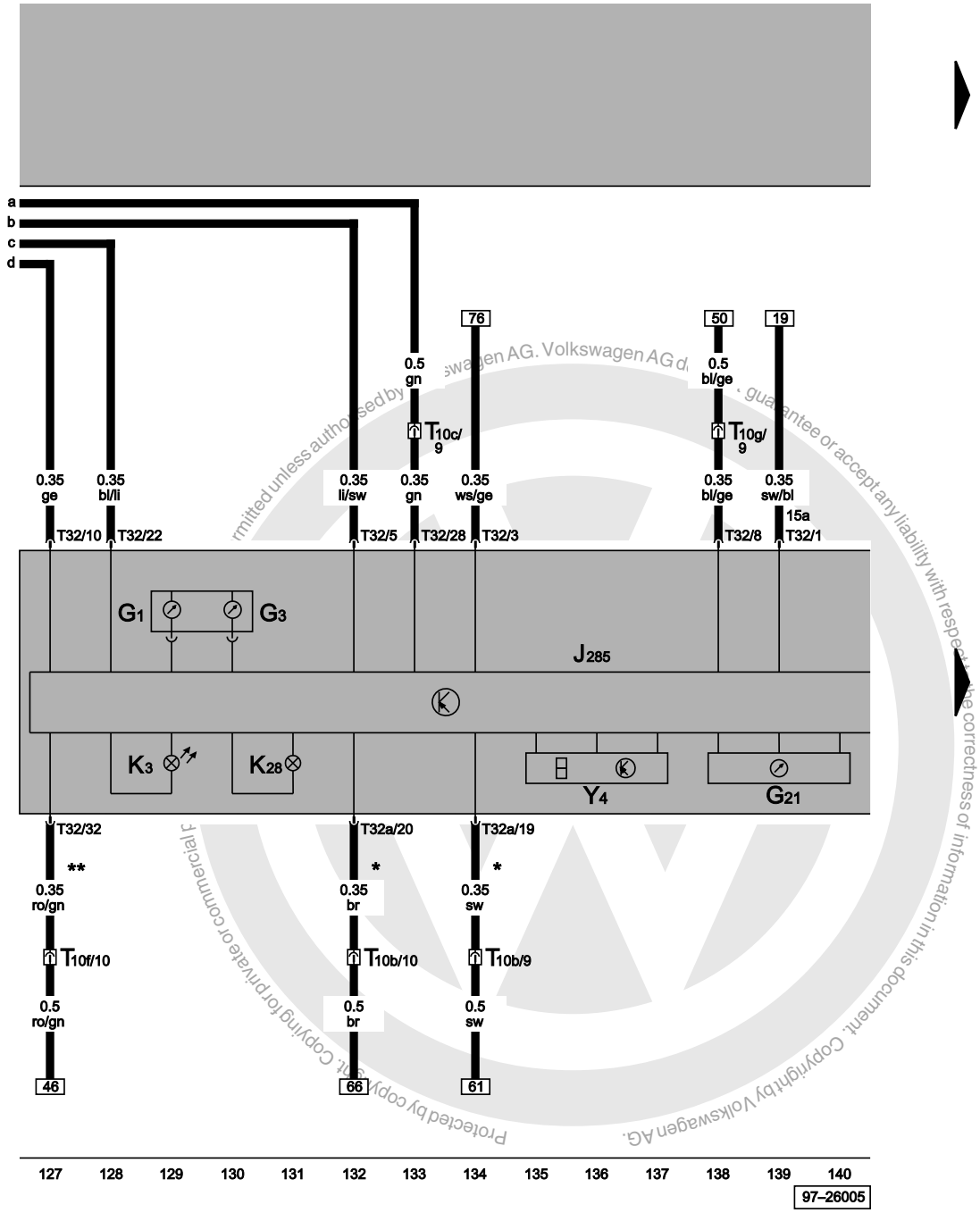

Control unit with display in dash panel insert fuel gauge, coolant temperature gauge, speedometer, oil pressure warning lamp, coolant temperature/coolant shortage warning lamp

G1	Fuel gauge
G3	Coolant temperature gauge
G21	Speedometer
J285	Control unit with display in dash panel insert
K3	Oil pressure warning lamp
K28	Coolant temperature/coolant shortage warning lamp
T10b	10-pin connector, white, in protective housing for connectors
T10c	10-pin connector, brown, in protective housing for connectors
T10f	10-pin connector, purple, in protective housing for connectors
T10g	10-pin connector, red, in protective housing for connectors
T32	32-pin connector, blue
T32a	32-pin connector, green
Y4	Odometer display
*	Data wire
**	Specific export versions

ws	=	white
sw	=	black
ro	=	red
br	=	brown
gn	=	green
bl	=	blue
gr	=	grey
li	=	purple
ge	=	yellow
or	=	orange
rs	=	pink

Protected by copyright. Copying for private or commercial purposes, in any form, without the express permission of Volkswagen AG is not permitted unless authorised by Volkswagen AG. Volkswagen AG does not guarantee or accept any liability with respect to the correctness of information in this document. Copyright by Volkswagen AG.

satelettronica

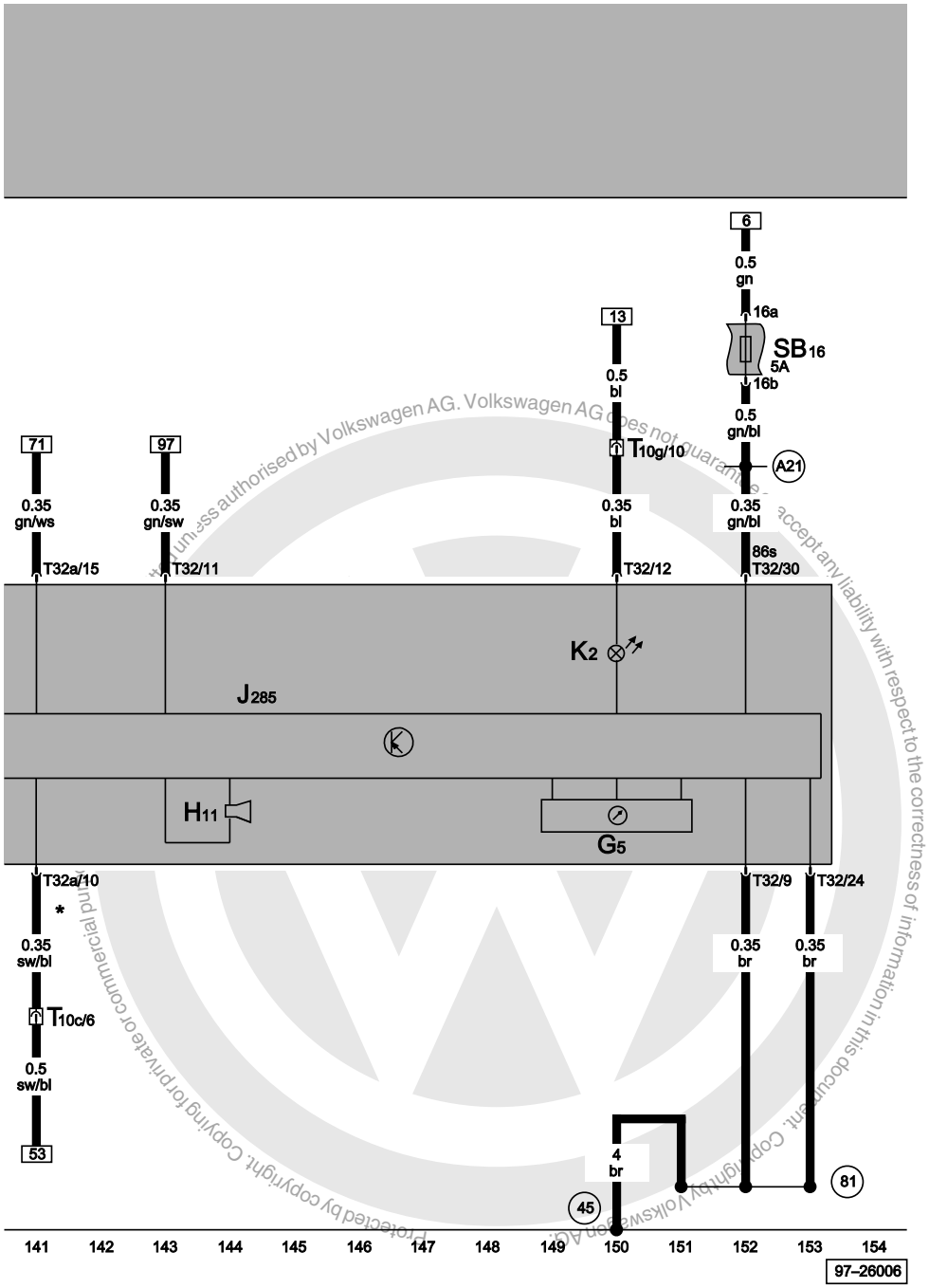

Control unit with display in dash panel insert, rev. counter, oil pressure warning buzzer, alternator warning lamp

G5	Rev. counter
H11	Oil pressure warning buzzer
J285	Control unit with display in dash panel insert
K2	Alternator warning lamp
SB16	Fuse -16- on fuse box
T10c	10-pin connector, brown, in protective housing for connectors
T10g	10-pin connector, red, in protective housing for connectors
T32	32-pin connector, blue
T32a	32-pin connector, green
45	Earth point, behind dash panel - centre
81	Earth connection -1-, in dash panel wiring harness
A21	Connection (86s), in dash panel wiring harness
*	Specific export versions

ws	=	white
sw	=	black
ro	=	red
br	=	brown
gn	=	green
bl	=	blue
gr	=	grey
li	=	purple
ge	=	yellow
or	=	orange
rs	=	pink

Protected by copyright. Copying for private or commercial purposes, in part or in whole, is not permitted unless authorised by Volkswagen AG. Volkswagen AG does not guarantee or accept any liability with respect to the correctness of information in this document. Copyright by Volkswagen AG.

satelettronica

Four-speed automatic gearbox (AG4)

From October 1999

•1.6 l Simos/74 kW, engine codes APF/AEH

From October 1999

For alternatives to relay and fuse positions as well as multi-pin connector wiring - see "Fitting locations" section.

Relay locations on relay plate:

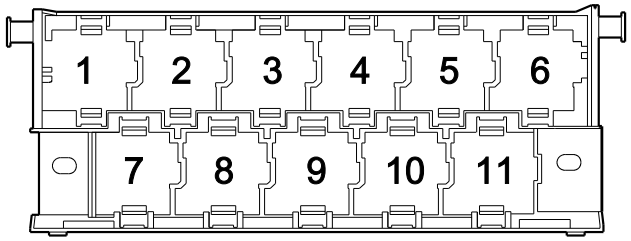

97--25507

3 - Starter inhibitor relay (175)

Note:

- *The number in brackets behind the part designation denotes the control number on the housing.*

Fuse colours

30 A - green
25 A - white
20 A - yellow
15 A - blue
10 A - red
7.5 A - brown
5 A - beige
3 A - purple

Protected by copyright. Copying for private or commercial purposes, in part or in whole, is not permitted unless authorised by Volkswagen AG. Volkswagen AG does not guarantee or accept any liability with respect to the correctness of information in this document. Copyright by Volkswagen AG.

satelettronica

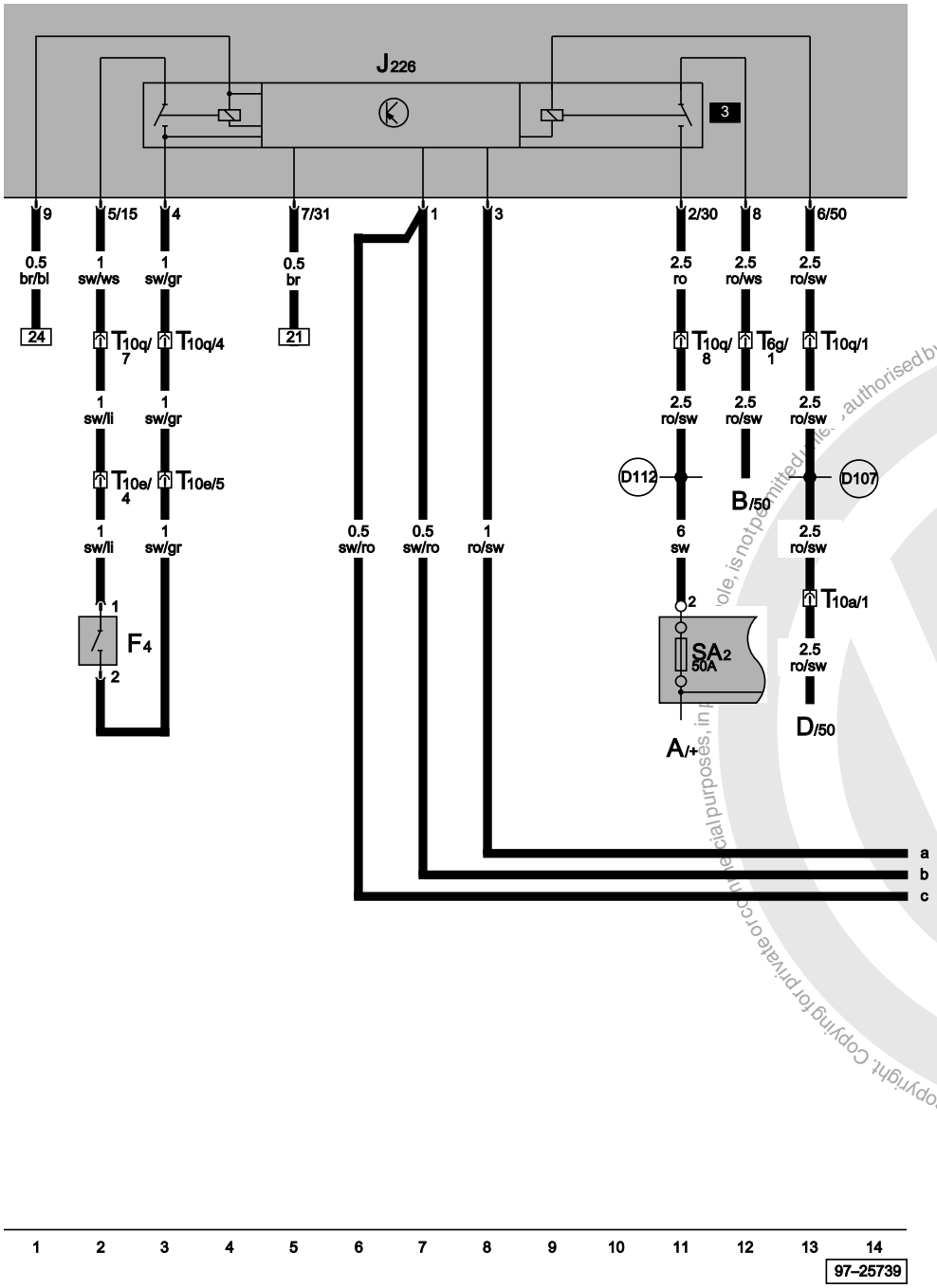

Starter inhibitor and reversing light relay, reversing light switch

A	Battery
B	Starter
D	Ignition/starter switch
F4	Reversing light switch
J226	Starter inhibitor and reversing light relay
SA2	Fuse -2- on battery fuse box
T6g	6-pin connector, black, in protective housing for connectors
T10a	10-pin connector, black, in protective housing for connectors
T10e	10-pin connector, green, in protective housing for connectors
T10q	10-pin connector, blue, in protective housing for connectors
D107	Connection -5-, in engine compartment wiring harness
D112	Connection -10-, in engine compartment wiring harness

ws	=	white
sw	=	black
ro	=	red
br	=	brown
gn	=	green
bl	=	blue
gr	=	grey
li	=	purple
ge	=	yellow
or	=	orange
rs	=	pink

Protected by copyright. Copying for private or commercial purposes, in part or whole, is not permitted unless authorised by Volkswagen AG. Volkswagen AG does not guarantee or accept any liability with respect to the correctness of information in this document. Copyright by Volkswagen AG.

satelettronica

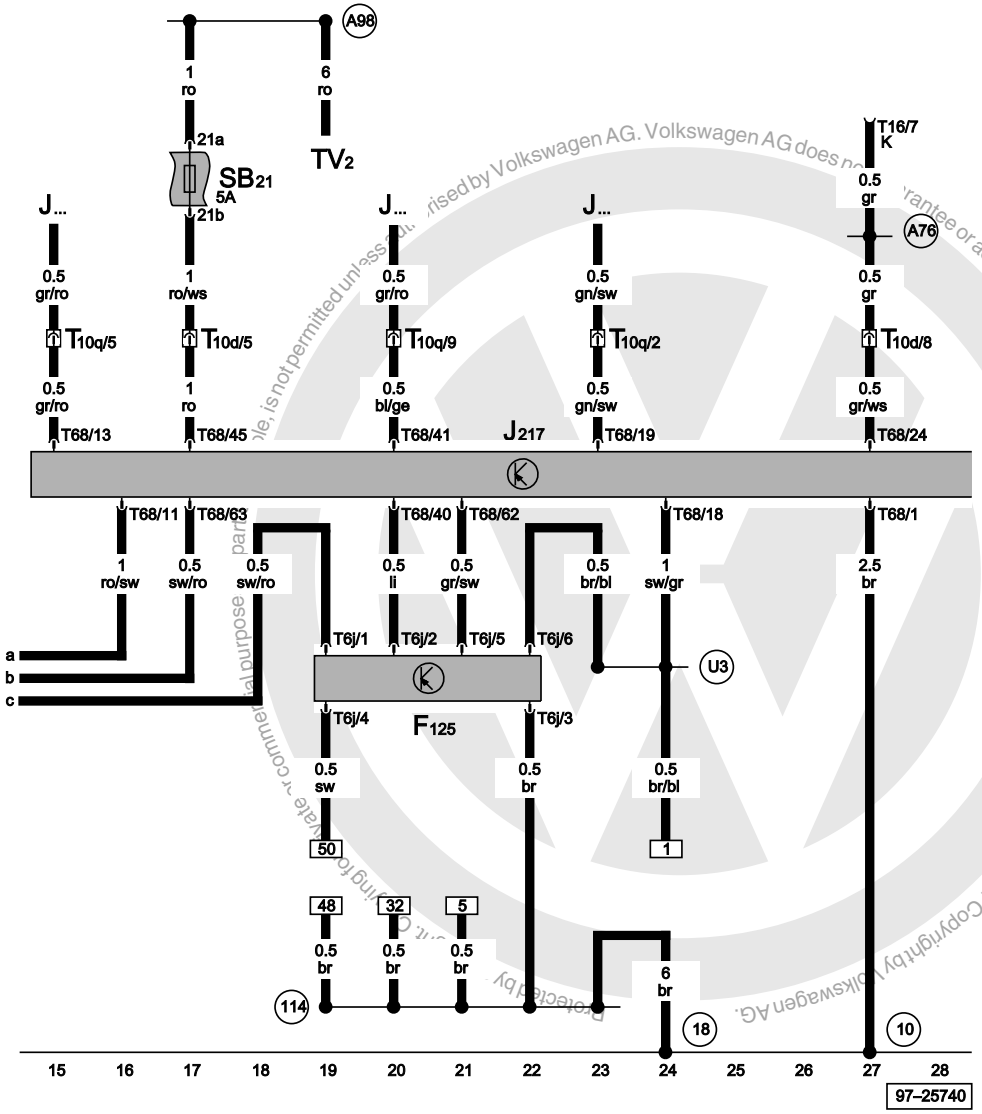

Automatic gearbox control unit, multi-function switch

F125	Multi-function switch
J...	Engine control units
J217	Automatic gearbox control unit
SB21	Fuse -21- on fuse box
TV2	Terminal 30 junction box
T6j	6-pin connector, multi-function switch
T10d	10-pin connector, pink, in protective housing for connectors
T10q	10-pin connector, blue, in protective housing for connectors
T16	16-pin connector, diagnosis
T68	68-pin connector
10	Earth point, in plenum chamber
18	Earth point, on engine block
114	Earth connection, in automatic gearbox wiring harness
A76	Connection (diagnosis wire K), in dash panel wiring harness
A98	Positive (+) connection -4- (30), in dash panel wiring harness
U3	Connection -1-, in automatic gearbox wiring control unit

ws	=	white
sw	=	black
ro	=	red
br	=	brown
gn	=	green
bl	=	blue
gr	=	grey
li	=	purple
ge	=	yellow
or	=	orange
rs	=	pink

satelettronica

Copyright by Volkswagen AG. Volkswagen AG does not guarantee or accept any liability with respect to the correctness of information in this document. Copyright by Volkswagen AG. Reproduced by Volkswagen AG for private or commercial purposes, in part or in whole, by copyright holders.

Automatic gearbox control unit, kick-down switch, gearbox speed sender, oil temperature sender, solenoid valve 1, solenoid valve 2, solenoid valve 3

F8	Kick-down switch
G38	Gearbox speed sender
G93	Gearbox oil temperature sender
J...	Engine control units
J217	Automatic gearbox control unit
N88	Solenoid valve 1
N89	Solenoid valve 2
N90	Solenoid valve 3
N91	Solenoid valve 4
N92	Solenoid valve 5
N93	Solenoid valve 6
N94	Solenoid valve 7
T2f	2-pin connector, on gearbox
T10q	10-pin connector, blue, in protective housing for connectors
T12e	12-pin connector
T68	68-pin connector
*	Data wire

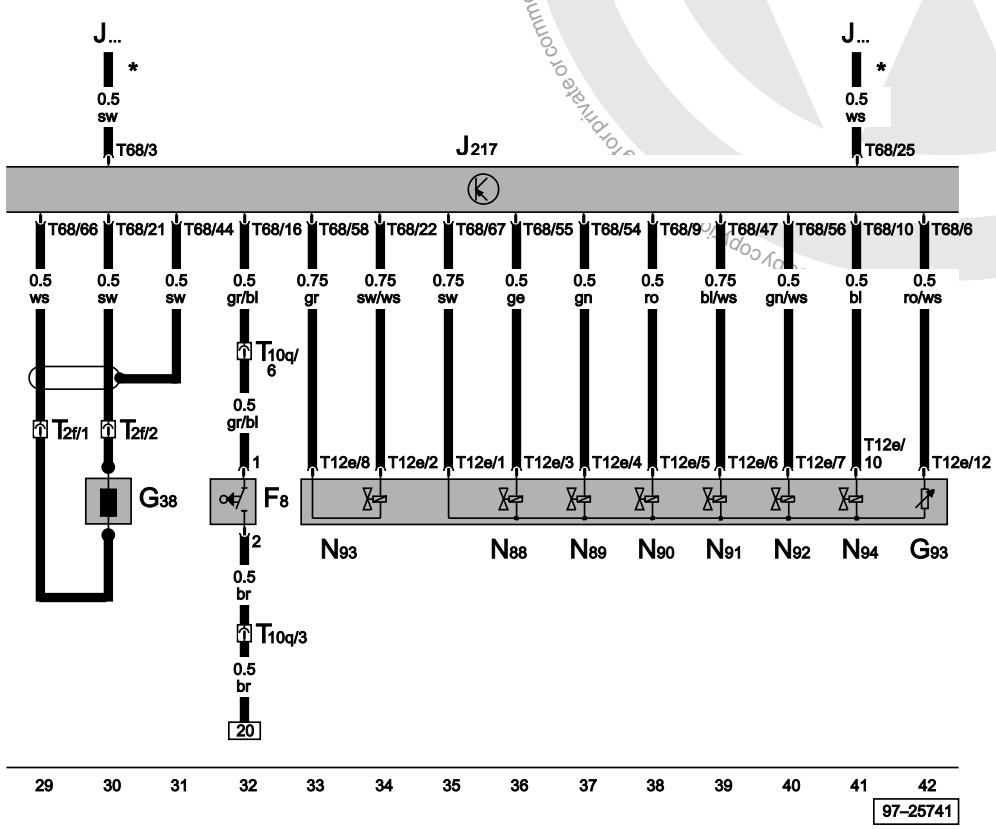

ws	=	white
sw	=	black
ro	=	red
br	=	brown
gn	=	green
bl	=	blue
gr	=	grey
li	=	purple
ge	=	yellow
or	=	orange
rs	=	pink

satelettronica

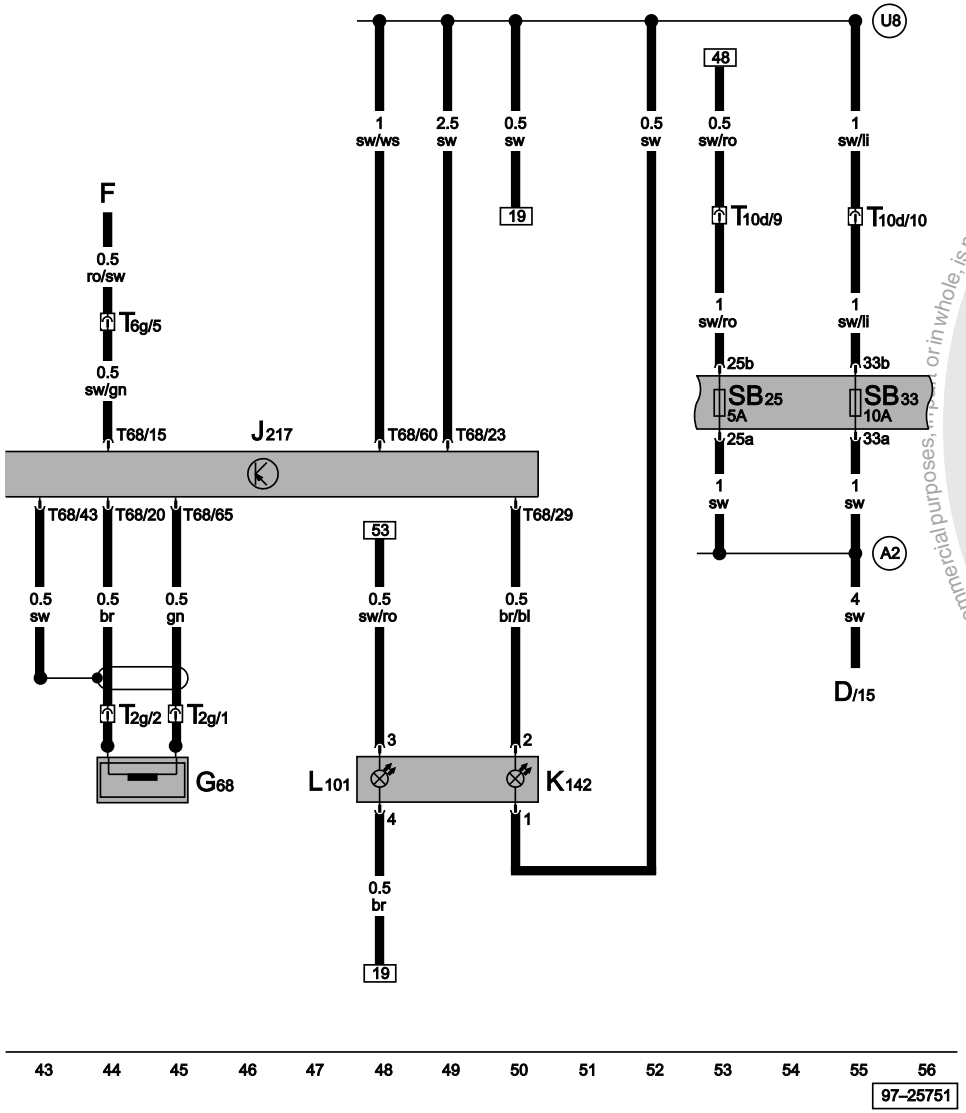

Automatic gearbox control unit, vehicle speed sender (inductive sender, 2 connections), selector lever position P/N warning lamp, selector lever display illumination

D	Ignition/starter switch
F	Brake light switch
G68	Vehicle speed sender (inductive sender, 2 connections)
J217	Automatic gearbox control unit
K142	Selector lever position P/N warning lamp
L101	Selector lever display illumination
SB25	Fuse -25- on fuse box
SB33	Fuse -33- on fuse box
T2g	2-pin connector, on gearbox
T6g	6-pin connector, black, in protective housing for connectors
T10d	10-pin connector, pink, in protective housing for connectors
T68	68-pin connector
A2	Positive (+) connection (15), in dash panel wiring harness
U8	Positive (+) connection (15a), in automatic gearbox wiring harness

ws	=	white
sw	=	black
ro	=	red
br	=	brown
gn	=	green
bl	=	blue
gr	=	grey
li	=	purple
ge	=	yellow
or	=	orange
rs	=	pink

Protected by copyright. Copying for private or commercial purposes, in part or in whole, is not permitted unless authorised by Volkswagen AG. Volkswagen AG does not guarantee or accept any liability with respect to the correctness of information in this document. Copyright by Volkswagen AG.
satelettronica

Radiator fan, 2 speed

⇒ 1,6 l Simos/74 kW, engine codes APF

From October 1999

Radiator fan, 2 speed

⇒ 1,6 l Simos/74 kW, engine codes AUR

⇒ 1,9 l/66 kW turbo-diesel engine, engine codes AGR, ALH

⇒ 1,9 l TDI/81kW, engine codes ASV, ASK

From May 2000

Protected by copyright. Copying for private or commercial purposes, in part or in whole, is not permitted unless authorised by Volkswagen AG. Volkswagen AG does not guarantee or accept any liability with respect to the correctness of information in this document. Copyright by Volkswagen AG.

For alternatives to relay and fuse positions as well as multi-pin connector wiring - see "Fitting locations" section.

Relay locations on relay plate:

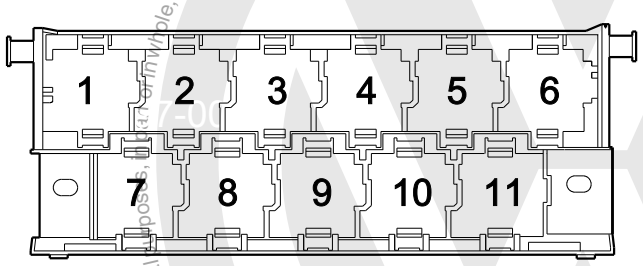

97-22850

1 - Radiator fan V7 and V35 relay, 1st speed

Note:

♦ *The number in brackets behind the part designation denotes the control number on the housing.*

Fuse colours

30 A - green
25 A - white
20 A - yellow
15 A - blue
10 A - red

satelettronica

7.5 A - brown
5 A - beige
3 A - purple

Volkswagen AG. Volkswagen AG does not guarantee or accept any liability with respect to the correctness of information in this document. Copyright by Volkswagen AG. Protected by copyright. Copying for private or commercial purposes, in part or in whole, is not permitted unless authorised by Volkswagen AG.

satelettronica

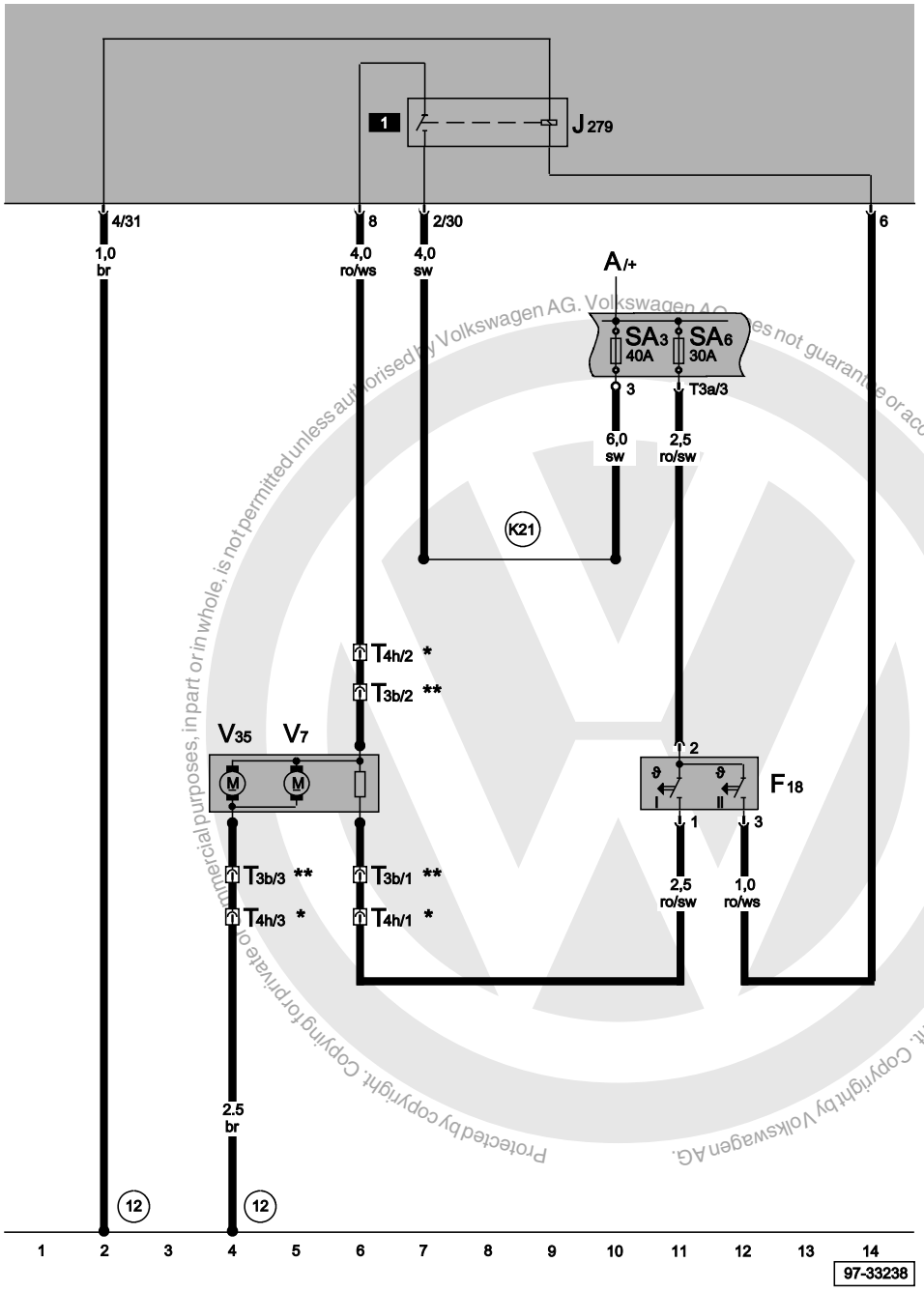

Radiator fan thermo-switch, radiator fan V7 and V35 relay, 1st speed, radiator fan, radiator fan, right

A	Battery
F18	Radiator fan thermo-switch
J279	Radiator fan V7 and V35 relay, 1st speed
SA3	Fuse -3- on battery fuse box
SA6	Fuse -6- on battery fuse box
T3a	3-pin connector, on battery fuse box
T3b	3-pin connector, on radiator fan
T4h	4-pin connector, on radiator fan
V7	Radiator fan
V35	Radiator fan, right
12	Earth point, left in engine compartment
K21	Connection -1-, in radiator fan wiring harness
*	Only for engine codes APF
**	Only for engine codes AUR, AGR, ALH, ASV, ASK

ws	=	white
sw	=	black
ro	=	red
br	=	brown
gn	=	green
bl	=	blue
gr	=	grey
li	=	purple
ge	=	yellow
or	=	orange
rs	=	pink

Protected by copyright. Copying for private or commercial purposes, in part or in whole, is not permitted unless authorised by Volkswagen AG. Volkswagen AG does not guarantee or accept any liability with respect to the correctness of information in this document. Copyright by Volkswagen AG.

satelettronica

Dual tone horn

From October 1999

For alternatives to relay and fuse positions as well as multi-pin connector wiring - see "Fitting locations" section.

Relay locations on relay plate:

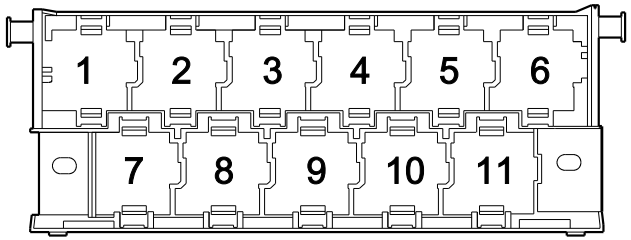

97--25507

10 - Dual tone horn relay (53)

Note:

- *The number in brackets behind the part designation denotes the control number on the housing.*

Fuse colours

30 A - green
25 A - white
20 A - yellow
15 A - blue
10 A - red
7.5 A - brown
5 A - beige
3 A - purple

Protected by copyright. Copying for private or commercial purposes, in part or in whole, is not permitted unless authorised by Volkswagen AG. Volkswagen AG does not guarantee or accept any liability with respect to the correctness of information in this document. Copyright by Volkswagen AG.

satelettronica

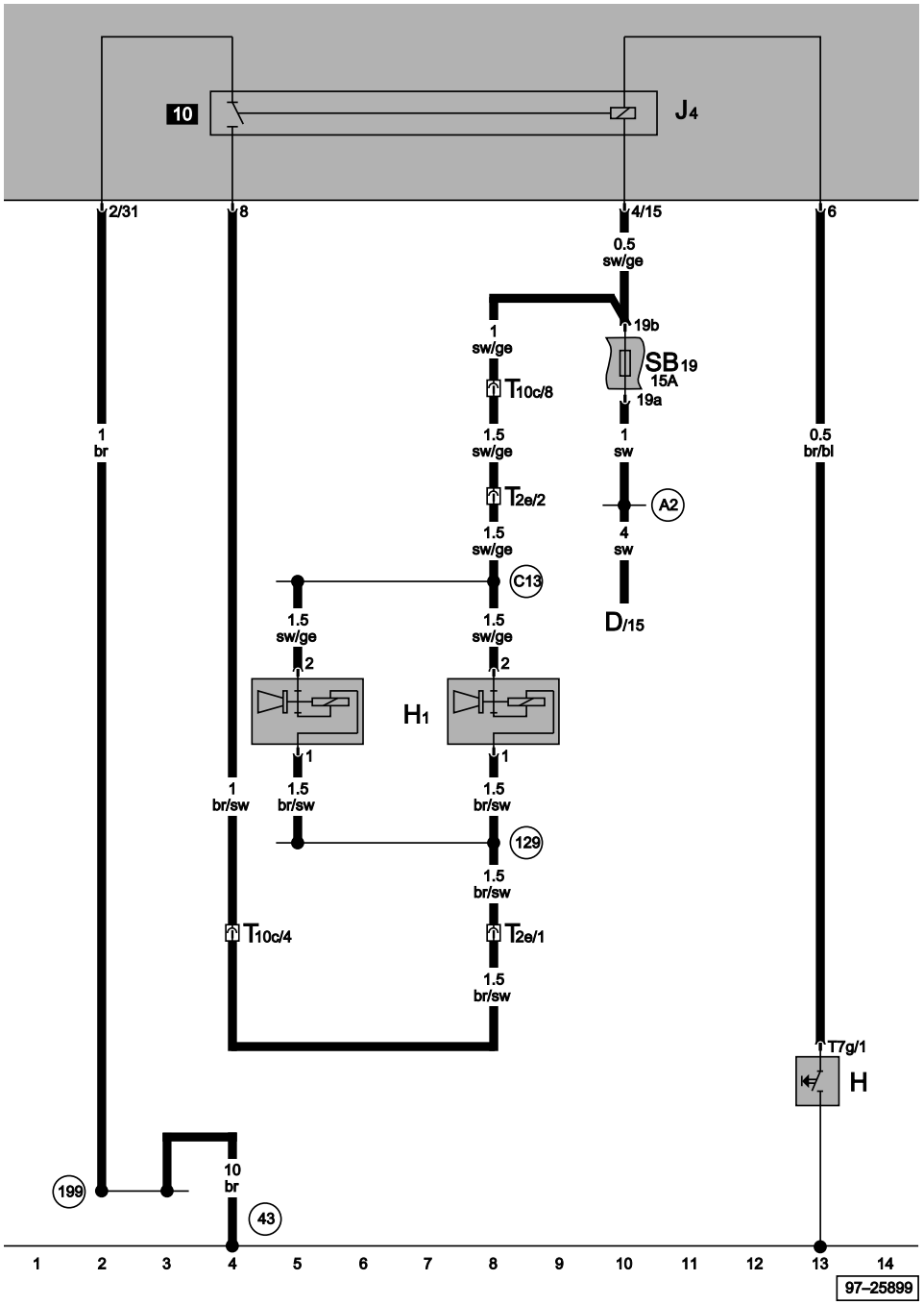

Horn/dual tone horn, horn plate, dual tone horn relay

D	Ignition/starter switch
H	Horn plate
H1	Horn/dual tone horn
J4	Dual tone horn relay
SB19	Fuse -19- on fuse box
T2e	2-pin connector, black
T7g	7-pin connector
T10c	10-pin connector, brown, in protective housing for connectors
43	Earth point, lower part of right A-pillar
129	Earth connection, in dual tone horn wiring harness
199	Earth connection -3-, in dash panel wiring harness
A2	Positive (+) connection (15), in dash panel wiring harness
C13	Positive (+) connection, in dual tone horn wiring harness

ws	=	white
sw	=	black
ro	=	red
br	=	brown
gn	=	green
bl	=	blue
gr	=	grey
li	=	purple
ge	=	yellow
or	=	orange
rs	=	pink

Protected by copyright. Copying for private or commercial purposes, in part or in whole, is not permitted unless authorised by Volkswagen AG. Volkswagen AG does not guarantee or accept any liability with respect to the correctness of information in this document. Copyright by Volkswagen AG.
satelettronica

Protected by copyright. Copying for private or commercial purposes, in part or in whole, is not permitted unless authorised by Volkswagen AG. Volkswagen AG does not guarantee or accept any liability with respect to the correctness of information in this document. Copyright by Volkswagen AG.

Air conditioner

⇒ 1.0 l 16V MPI-RSH/ 51 kW, engine code AFR
⇒ 1.4 l MPI-RSH/44 kW, engine code AKK/ANW
⇒ 1.4 l 16V MPI-RSH/ 55 kW, engine code APE
⇒ 1.4 l 16V MPI-RSH/ 74 kW, engine code AQQ
⇒ 1.6 l Simos/ 74 kW, engine code APF/AKL/AEH
From October 1999

For alternatives to relay and fuse positions as well as multi-pin connector wiring - see "Fitting locations" section.

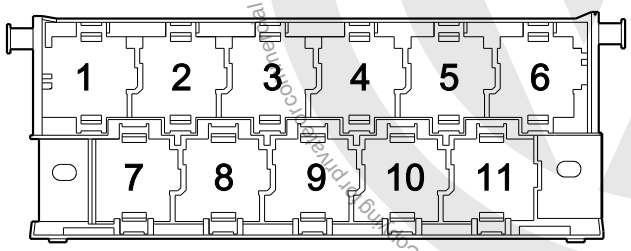

97--25507

Fuse colours

30 A - green
25 A - white
20 A - yellow
15 A - blue
10 A - red
7.5 A - brown
5 A - beige
3 A - purple

satelettronica

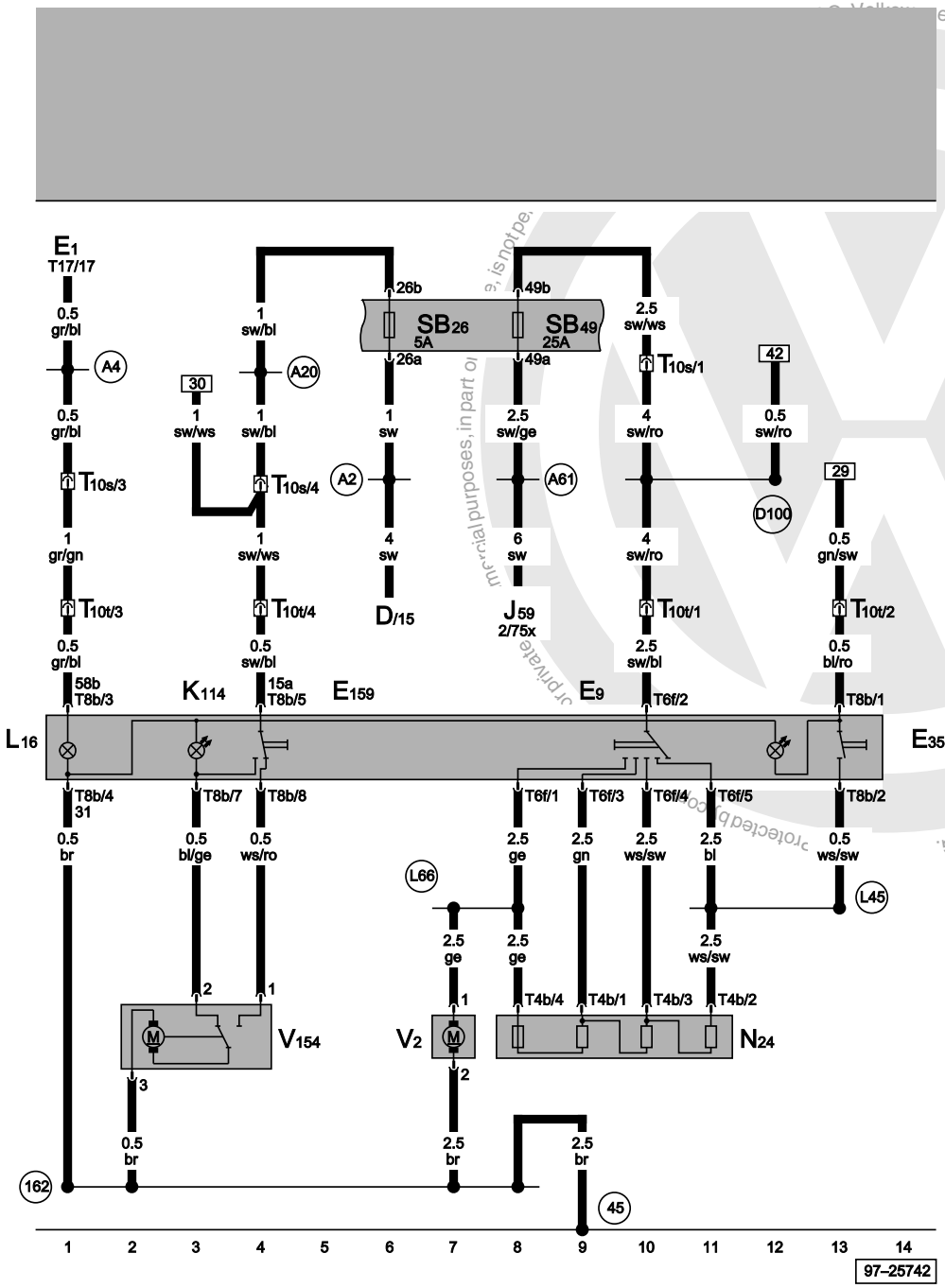

ws	=	white
sw	=	black
ro	=	red
br	=	brown
gn	=	green
bl	=	blue
gr	=	grey
li	=	purple
ge	=	yellow
or	=	orange
rs	=	pink

Fresh air blower switch, air conditioner switch, fresh air/air recirculating flap switch

D	Ignition/starter switch
E1	Lighting switch
E9	Fresh air blower switch
E35	Air conditioner switch
E159	Fresh air/air recirculating flap switch
J59	X contact relief relay
L16	Fresh air control light bulb
N24	Fresh air blower with overheating fuse series resistor
SB26	Fuse -26- on fuse box
SB49	Fuse -49- on fuse box
T4b	4-pin connector
T6f	6-pin connector
T8b	8-pin connector
T10s	10-pin connector, black
T10t	10-pin connector
T17	17-pin connector
V2	Fresh air blower
V154	Fresh/recirculating air flap control motor
K114	Fresh air/air recirculation warning lamp
45	Earth point, behind dash panel - centre
162	Earth connection, in blower motor wiring harness
A2	Positive (+) connection (15), in dash panel wiring harness
A4	Positive (+) connection (58b), in dash panel wiring harness
A20	Connection (15a), in dash panel wiring harness
A61	Positive (+) connection (X), in instruments wiring harness
D100	Positive (+) connection -2- (15), in engine compartment wiring harness
L45	Connection, in air conditioner control wiring harness
L66	Connection, in heater blower wiring harness

satelettronica

Radiator fan control unit, air conditioner system, magnetic coupling, radiator fan, radiator fan right

J220	Motronic control unit
J293	Radiator fan control unit
J361	Simos control unit
N25	Air conditioning system magnetic coupling
T4h	4-pin connector, black, in radiator
T4g	4-pin connector, in engine compartment, left
T5d	5-pin connector, in engine, near gearbox
T5h	5-pin connector, brown, in protective housing for connectors
T14b	14-pin connector, in engine compartment, left
T45	45-pin connector
T80	80-pin connector
T121	121-pin connector
V7	Radiator fan
V35	Radiator fan, right
12	Earth point, in engine compartment, left
193	Earth connection -1-, in radiator fan wiring harness
D135	Connection (1st fan speed), in engine - headlight wiring harness
*	Only models with engine code APE, AQQ
**	Only models with engine code APF
***	Only models with engine code AFR
****	Only models with engine code AKL, AEH
*****	Only models with engine code AKK, ANW

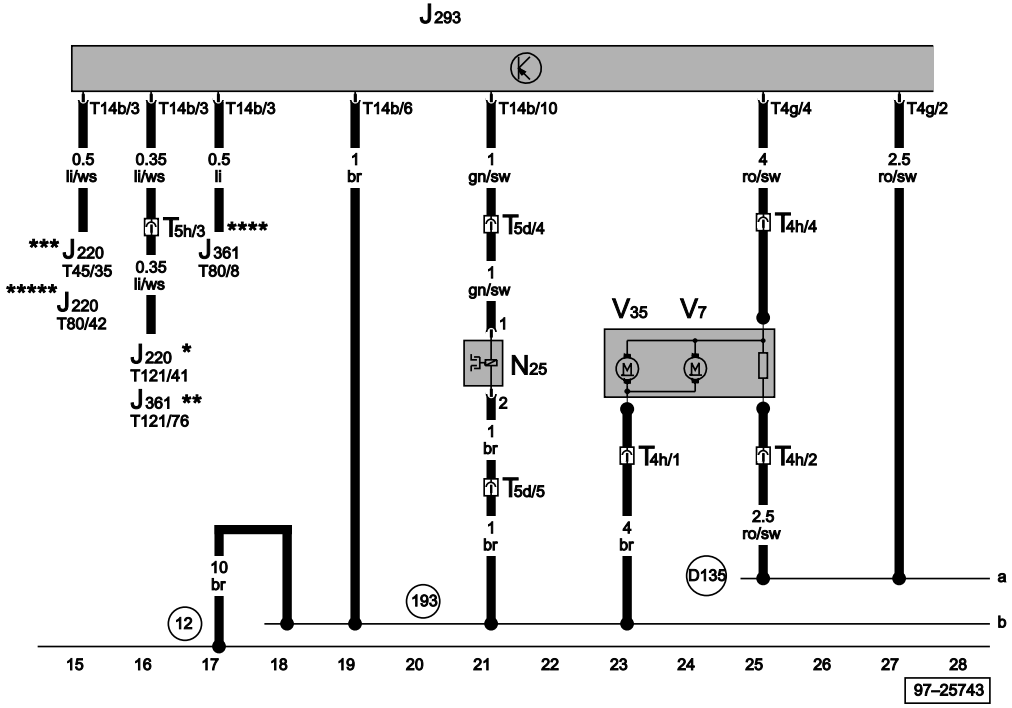

ws	=	white
sw	=	black
ro	=	red
br	=	brown
gn	=	green
bl	=	blue
gr	=	grey
li	=	purple
ge	=	yellow
or	=	orange
rs	=	pink

Protected by copyright. Copyright by Volkswagen AG. Volkswagen AG does not guarantee or accept any liability with respect to the correctness of information in this document. Copyright by Volkswagen AG. Copying for private or commercial purposes, in part or in whole, is not permitted unless authorised by Volkswagen AG.
satelettronica

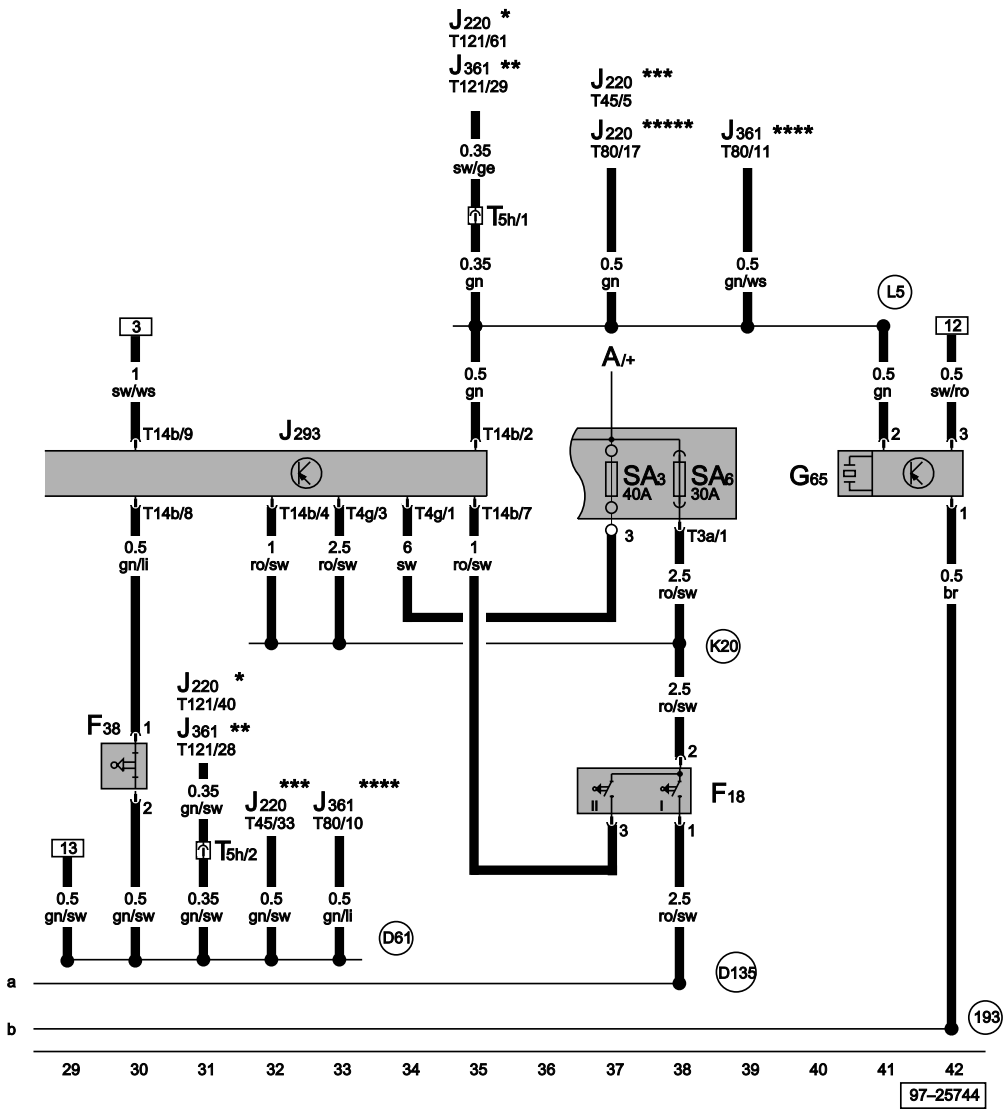

Radiator fan control unit, radiator fan thermo-switch, ambient temperature switch, high pressure sender

A	Battery
F18	Radiator fan thermo-switch
F38	Ambient temperature switch
G65	High pressure sender
J220	Motronic control unit
J293	Radiator fan control unit
J361	Simos control unit
SA3	Fuse -3- on battery fuse box
SA6	Fuse -6- on battery fuse box
T3a	3-pin connector, in battery
T4g	4-pin connector, in engine compartment, left
T5h	5-pin connector, brown, in protective housing for connectors
T14b	14-pin connector, in engine compartment, left
T45	45-pin connector
T80	80-pin connector
T121	121-pin connector
193	Earth connection -1-, in radiator fan wiring harness
D61	Connection (air conditioner), in engine compartment wiring harness
D135	Connection (1st fan speed), in engine - headlight wiring harness
K20	Positive (+) connection -1- (30), in radiator fan wiring harness
L5	Connection -1-, in air conditioner wiring harness
*	Only models with engine code APE, AQQ
**	Only models with engine code APF
***	Only models with engine code AFR
****	Only models with engine code AKL, AEH
*****	Only models with engine code AKK, ANW

ws	=	white
sw	=	black
ro	=	red
br	=	brown
gn	=	green
bl	=	blue
gr	=	grey
li	=	purple
ge	=	yellow
or	=	orange
rs	=	pink

Copyright by Volkswagen AG, Wolfsburg. It is not to be copied or made available to third parties for commercial purposes, in part or in whole, is not permitted unless authorised by Volkswagen AG. Volkswagen AG does not guarantee or accept any liability with respect to the correctness of information in this document.
satelettronica

Protected by copyright. Unauthorised copying for private or commercial purposes, in part or in whole, is not permitted unless authorised by Volkswagen AG. Volkswagen AG does not guarantee or accept any liability with respect to the correctness of information in this document. Copyright by Volkswagen AG.

Air conditioner

⇒ 1.9 l /50 kW SDI, engine code AGP/AQM
⇒ 1.9 l /66 kW TDI, engine code AGR/ALH
⇒ 1.9 l /81 kW TDI, engine code ASV
From October 1999

For alternatives to relay and fuse positions as well as multi-pin connector wiring - see "Fitting locations" section.

Relay locations on relay plate:

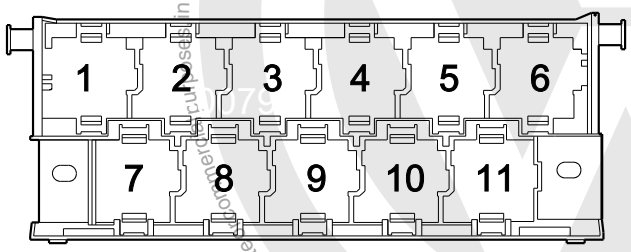

97--25507

1 - 2nd speed relay (53) - without air conditioner

Note:

♦ *The number in brackets behind the part designation denotes the control number on the housing.*

Fuse colours

30 A - green
25 A - white
20 A - yellow
15 A - blue
10 A - red
7.5 A - brown
5 A - beige
3 A - purple

satelettronica

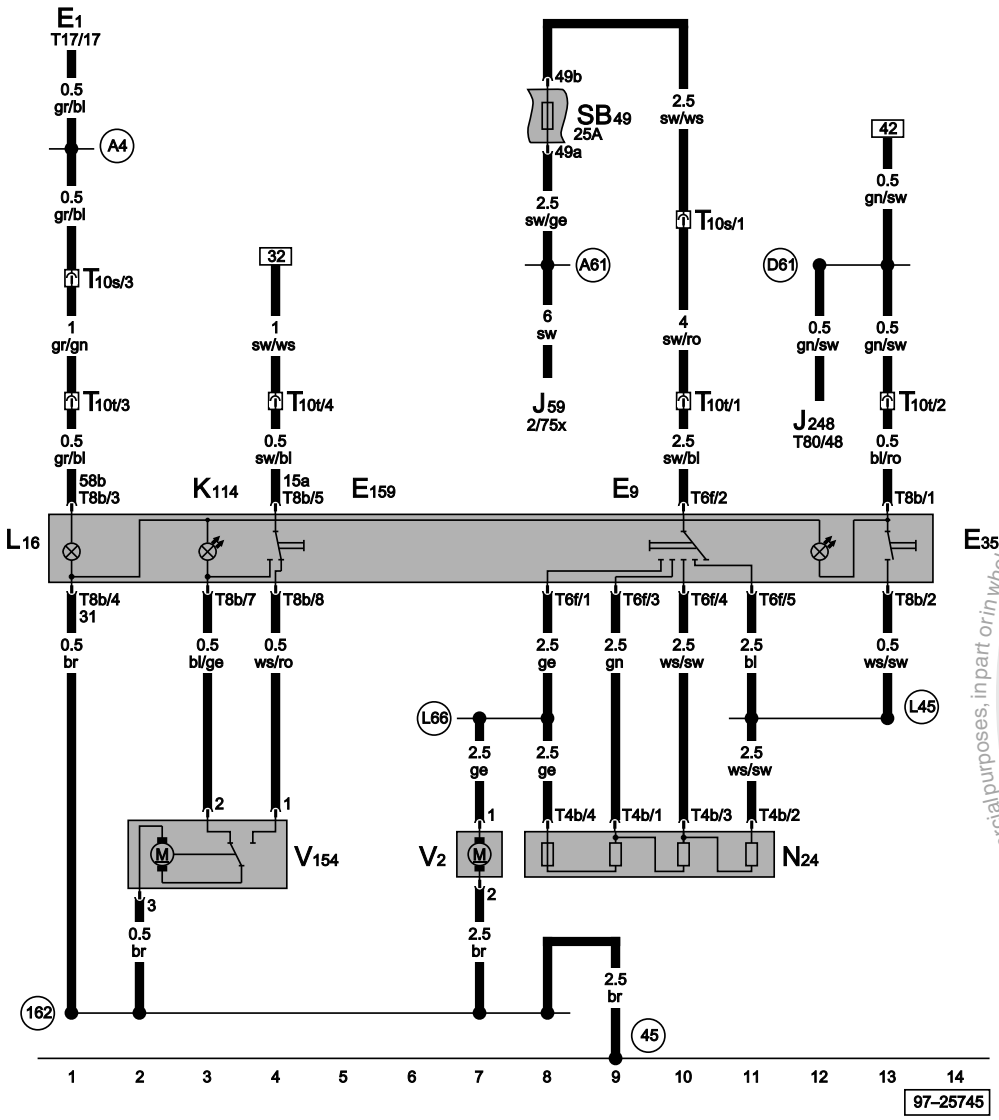

Fresh air blower switch, air conditioner switch, fresh air/air recirculating flap switch

E1	Lighting switch
E9	Fresh air blower switch
E35	Air conditioner switch
E159	Fresh air/air recirculating flap switch
J59	X contact relief relay
J248	Diesel direct injection system control unit
K114	Fresh air/air recirculation warning lamp
L16	Fresh air control light bulb
N24	Fresh air blower with overheating fuse series resistor
SB49	Fuse -49- on fuse box
T4b	4-pin connector
T6f	6-pin connector
T8b	8-pin connector
T10s	10-pin connector, black
T10t	10-pin connector
T17	17-pin connector
T80	80-pin connector
V2	Fresh air blower
V154	Fresh/recirculating air flap control motor
45	Earth point, behind dash panel - centre
162	Earth connection, in blower motor wiring harness
A4	Positive (+) connection (58b), in dash panel wiring harness
A61	Positive (+) connection (X), in instruments wiring harness
D61	Connection (air conditioner), in engine compartment wiring harness
L45	Connection, in air conditioner control wiring harness
L66	Connection, in heater blower wiring harness

ws	=	white
sw	=	black
ro	=	red
br	=	brown
gn	=	green
bl	=	blue
gr	=	grey
li	=	purple
ge	=	yellow
or	=	orange
rs	=	pink

Protected by copyright. Copying for private or commercial purposes, in part or in whole, is not permitted unless authorised by Volkswagen AG. Volkswagen AG does not guarantee or accept any liability with respect to the correctness of information in this document. Copyright by Volkswagen AG.
satelettronica

Radiator fan control unit, air conditioner system magnetic coupling, radiator fan, radiator fan right

J248	Diesel direct injection system control unit
J293	Radiator fan control unit
N25	Air conditioning system magnetic coupling
T4h	4-pin connector, black, in radiator
T4f	4-pin connector, in engine compartment, left
T5d	5-pin connector, in engine, near gearbox
T10r	10-pin connector, in engine compartment, left
T80	80-pin connector
V7	Radiator fan
V35	Radiator fan, right
12	Earth point, in engine compartment, left
193	Earth connection -1-, in radiator fan wiring harness
D116	Connection -14-, in engine compartment wiring harness
D135	Connection (1st fan speed), in engine - headlight wiring harness

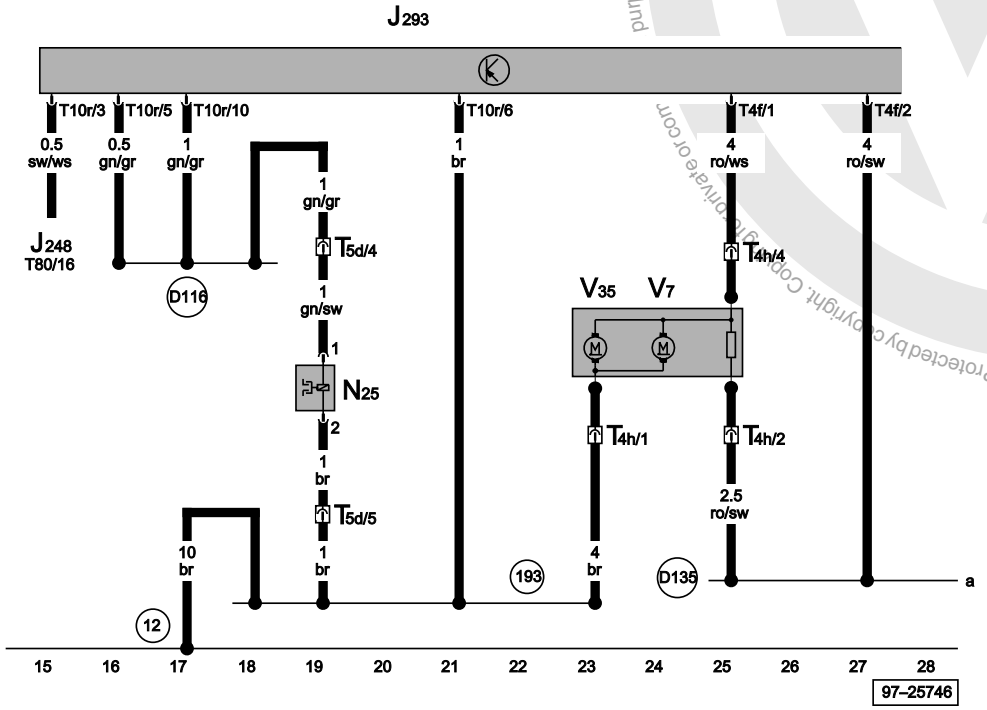

ws	=	white
sw	=	black
ro	=	red
br	=	brown
gn	=	green
bl	=	blue
gr	=	grey
li	=	purple
ge	=	yellow
or	=	orange
rs	=	pink

Protected by copyright. Copying for private or commercial purposes, in part or in whole, is not permitted unless authorised by Volkswagen AG. Volkswagen AG does not guarantee or accept any liability with respect to the correctness of information in this document. Copyright by Volkswagen AG.
satelettronica

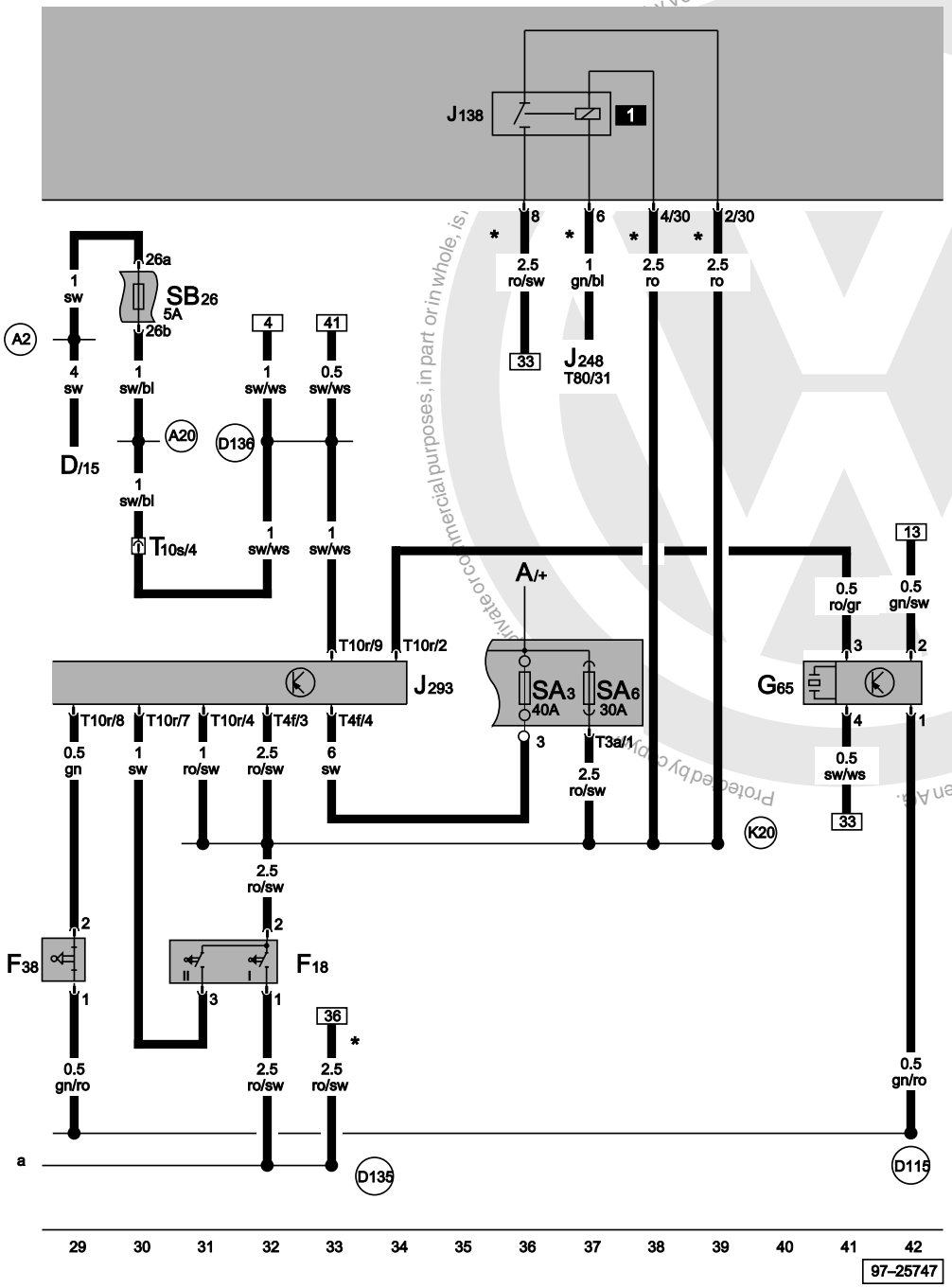

Radiator fan control unit, radiator fan thermo-switch, ambient temperature switch, high pressure sender

A	Battery
D	Ignition/starter switch
F18	Radiator fan thermo-switch
F38	Ambient temperature switch
G65	High pressure sender
J138	Radiator fan run-on control unit
J248	Diesel direct injection system control unit
J293	Radiator fan control unit
SA3	Fuse -3- on battery fuse box
SA6	Fuse -6- on battery fuse box
SB26	Fuse -26- on fuse box
T3a	3-pin connector, in battery
T4f	4-pin connector, in engine compartment, left
T10r	10-pin connector, in engine compartment, left
T10s	10-pin connector, black
T80	80-pin connector
A2	Positive (+) connection (15), in dash panel wiring harness
A20	Connection (15a), in dash panel wiring harness
D115	Connection -13-, in engine compartment wiring harness
D135	Connection (1st fan speed), in engine - headlight wiring harness
D136	Positive (+) connection -2- (15a), in engine compartment wiring harness
K20	Positive (+) connection -1- (30), in radiator fan wiring harness
*	Only models with engine codes ASV

ws	=	white
sw	=	black
ro	=	red
br	=	brown
gn	=	green
bl	=	blue
gr	=	grey
li	=	purple
ge	=	yellow
or	=	orange
rs	=	pink

satelettronica

Air conditioner

⇒ **1.6 l/55 kW MPI-RSH, engine codes ALM**

From October 1999

For alternatives to relay and fuse positions as well as multi-pin connector wiring - see "Fitting locations" section.

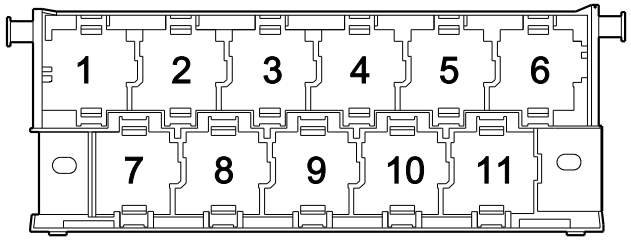

97--25507

Fuse colours

30 A - green
25 A - white
20 A - yellow
15 A - blue
10 A - red
7.5 A - brown
5 A - beige
3 A - purple

Protected by copyright. Copying for private or commercial purposes, in part or in whole, is not permitted unless authorised by Volkswagen AG. Volkswagen AG does not guarantee or accept any liability with respect to the correctness of information in this document. Copyright by Volkswagen AG.

satelettronica

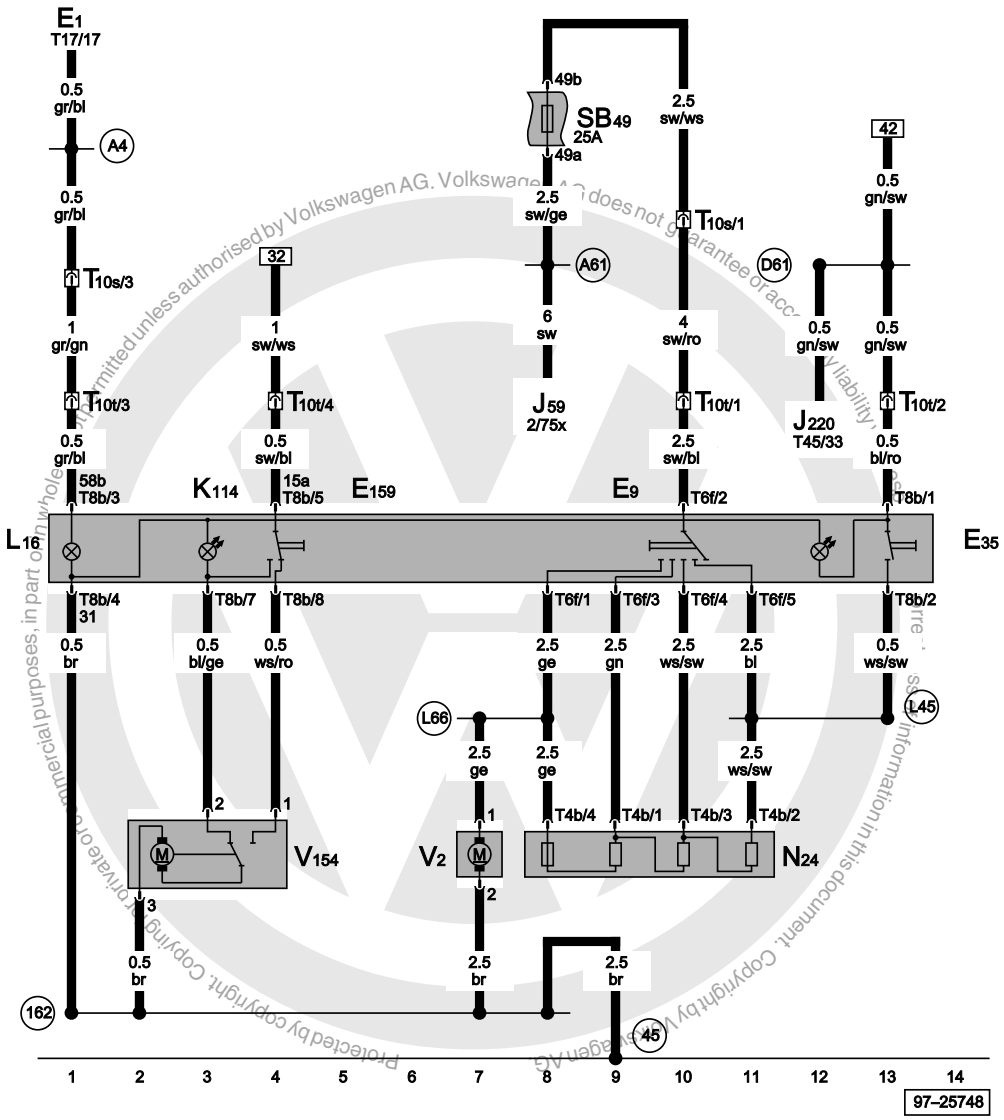

Fresh air blower switch, air conditioner switch, fresh air/air recirculating flap switch

E1	Lighting switch
E9	Fresh air blower switch
E35	Air conditioner switch
E159	Fresh air/air recirculating flap switch
J59	X contact relief relay
J220	Motronic control unit
K114	Fresh air/air recirculation warning lamp
L16	Fresh air control light bulb
N24	Fresh air blower with overheating fuse series resistor
SB49	Fuse -49- on fuse box
T4b	4-pin connector
T6f	6-pin connector
T8b	8-pin connector
T10s	10-pin connector, black
T10t	10-pin connector
T17	17-pin connector
T45	45-pin connector
V2	Fresh air blower
V154	Fresh/recirculating air flap control motor
45	Earth point, behind dash panel - centre
162	Earth connection, in blower motor wiring harness
A4	Positive (+) connection (58b), in dash panel wiring harness
A61	Positive (+) connection (X), in instruments wiring harness
D61	Connection (air conditioner), in engine compartment wiring harness
L45	Connection, in air conditioner control wiring harness
L66	Connection, in heater blower wiring harness

ws	=	white
sw	=	black
ro	=	red
br	=	brown
gn	=	green
bl	=	blue
gr	=	grey
li	=	purple
ge	=	yellow
or	=	orange
rs	=	pink

Protected by copyright. Copying for private or commercial purposes, in part or in whole, is not permitted unless authorised by Volkswagen AG. Volkswagen AG does not guarantee or accept any liability with respect to the correctness of information in this document. Copyright by Volkswagen AG.

satelettronica

Radiator fan control unit, air conditioner system magnetic coupling, radiator fan, radiator fan right

J220	Motronic control unit
J293	Radiator fan control unit
N25	Air conditioning system magnetic coupling
T4h	4-pin connector, black, in radiator
T4f	4-pin connector, in engine compartment, left
T5d	5-pin connector, in engine, near gearbox
T10r	10-pin connector, in engine compartment, left
T45	45-pin connector
V7	Radiator fan
V35	Radiator fan, right
12	Earth point, in engine compartment, left
193	Earth connection -1-, in radiator fan wiring harness
D116	Connection -14-, in engine compartment wiring harness
D135	Connection (1st fan speed), in engine - headlight wiring harness

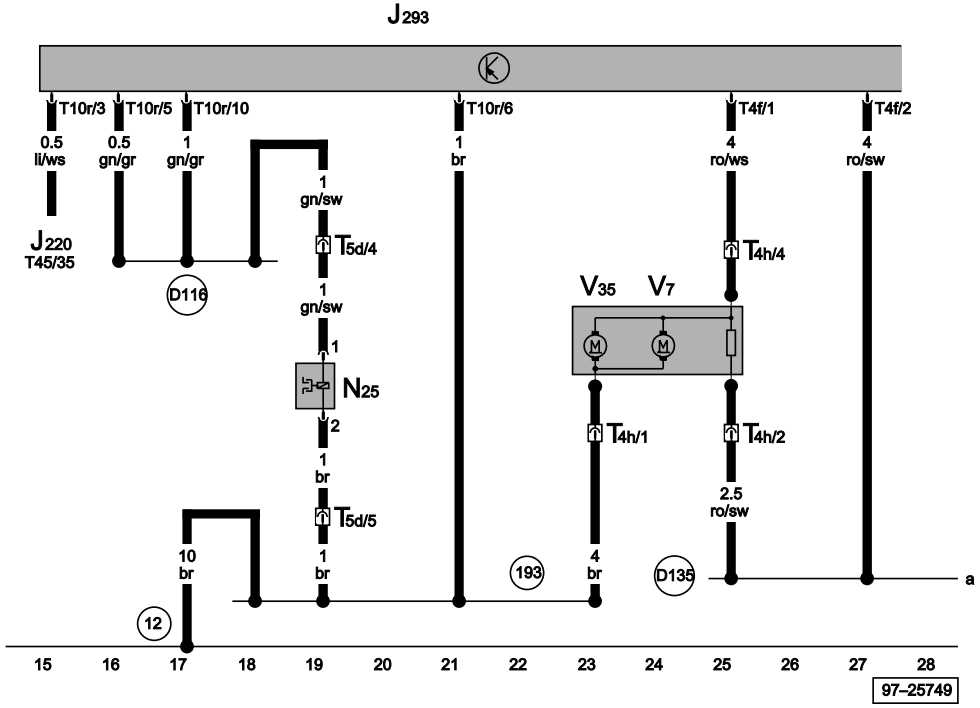

ws	=	white
sw	=	black
ro	=	red
br	=	brown
gn	=	green
bl	=	blue
gr	=	grey
li	=	purple
ge	=	yellow
or	=	orange
rs	=	pink

Protected by copyright. Copying for private or commercial purposes, in part or in whole, is not permitted unless authorised by Volkswagen AG. Volkswagen AG does not guarantee or accept any liability with respect to the correctness of information in this document. Copyright by Volkswagen AG.
satelettronica

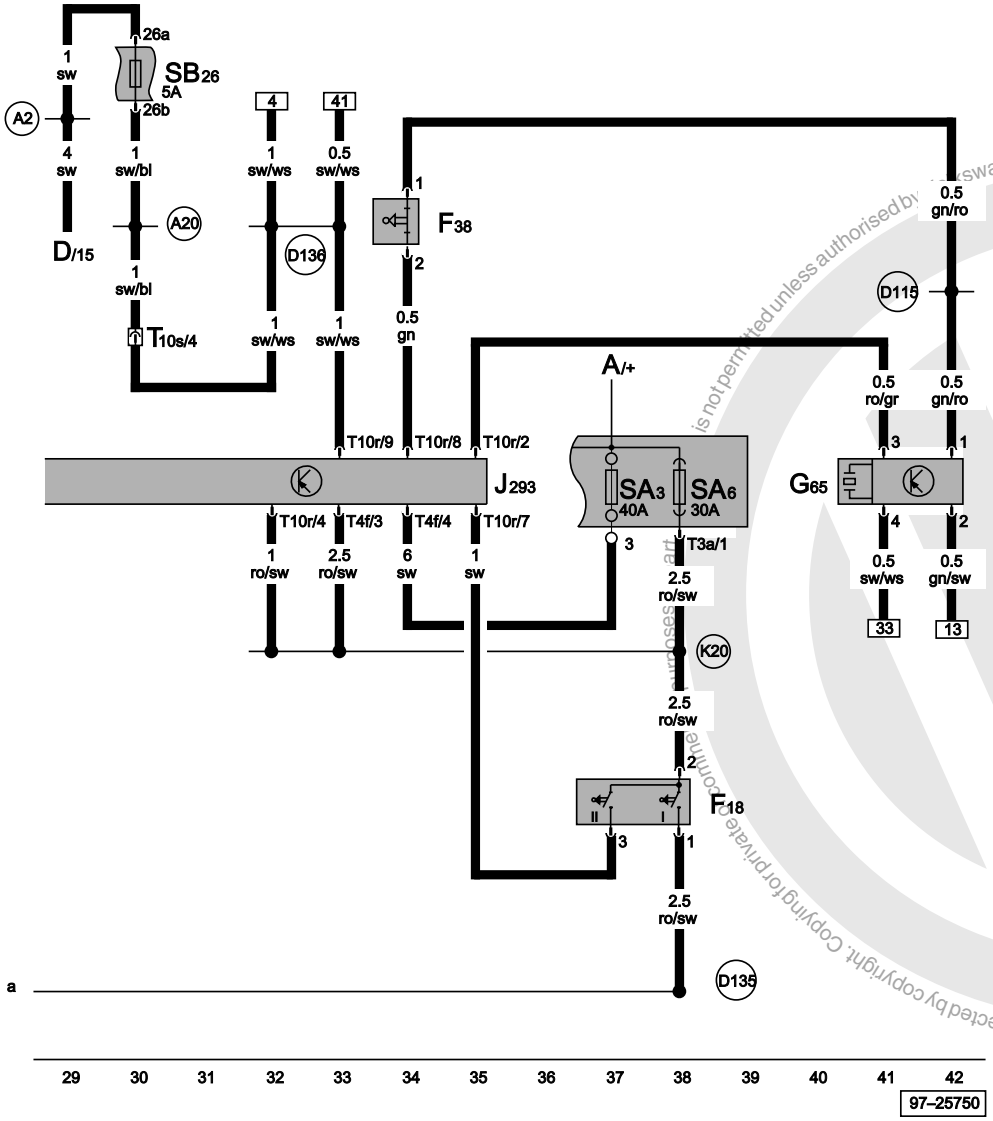

Radiator fan control unit, radiator fan thermo-switch, ambient temperature switch, high pressure sender

A	Battery
D	Ignition/starter switch
F18	Radiator fan thermo-switch
F38	Ambient temperature switch
G65	High pressure sender
J293	Radiator fan control unit
SA3	Fuse -3- on battery fuse box
SA6	Fuse -6- on battery fuse box
SB26	Fuse -26- on fuse box
T3a	3-pin connector, in battery
T4f	4-pin connector, in engine compartment, left
T10r	10-pin connector, in engine compartment, left
T10s	10-pin connector, black
A2	Positive (+) connection (15), in dash panel wiring harness
A20	Connection (15a), in dash panel wiring harness
D115	Connection -13-, in engine compartment wiring harness
D135	Connection (1st fan speed), in engine - headlight wiring harness
D136	Positive (+) connection -2- (15a), in engine compartment wiring harness
K20	Positive (+) connection -1- (30), in radiator fan wiring harness

ws	=	white
sw	=	black
ro	=	red
br	=	brown
gn	=	green
bl	=	blue
gr	=	grey
li	=	purple
ge	=	yellow
or	=	orange
rs	=	pink

Volkswagen AG. Volkswagen AG does not guarantee or accept any liability with respect to the correctness of information in this document. Copyright by Volkswagen AG. Protected by copyright. Copying for private and commercial purposes, in part or in whole, is not permitted unless authorised by Volkswagen AG.
satelettronica

Interior monitoring

From October 1999

For alternatives to relay and fuse positions as well as multi-pin connector wiring - see "Fitting locations" section.

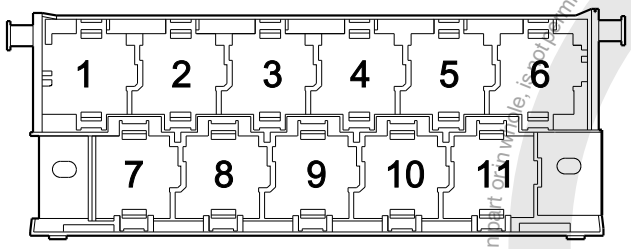

97--25507

Fuse colours

30 A - green
25 A - white
20 A - yellow
15 A - blue
10 A - red
7.5 A - brown
5 A - beige
3 A - purple

Protected by copyright. Copying for private or commercial purposes, in part or in whole, is not permitted unless authorised by Volkswagen AG. Volkswagen AG does not guarantee or accept any liability with respect to the correctness of information in this document. Copyright by Volkswagen AG.

satelettronica

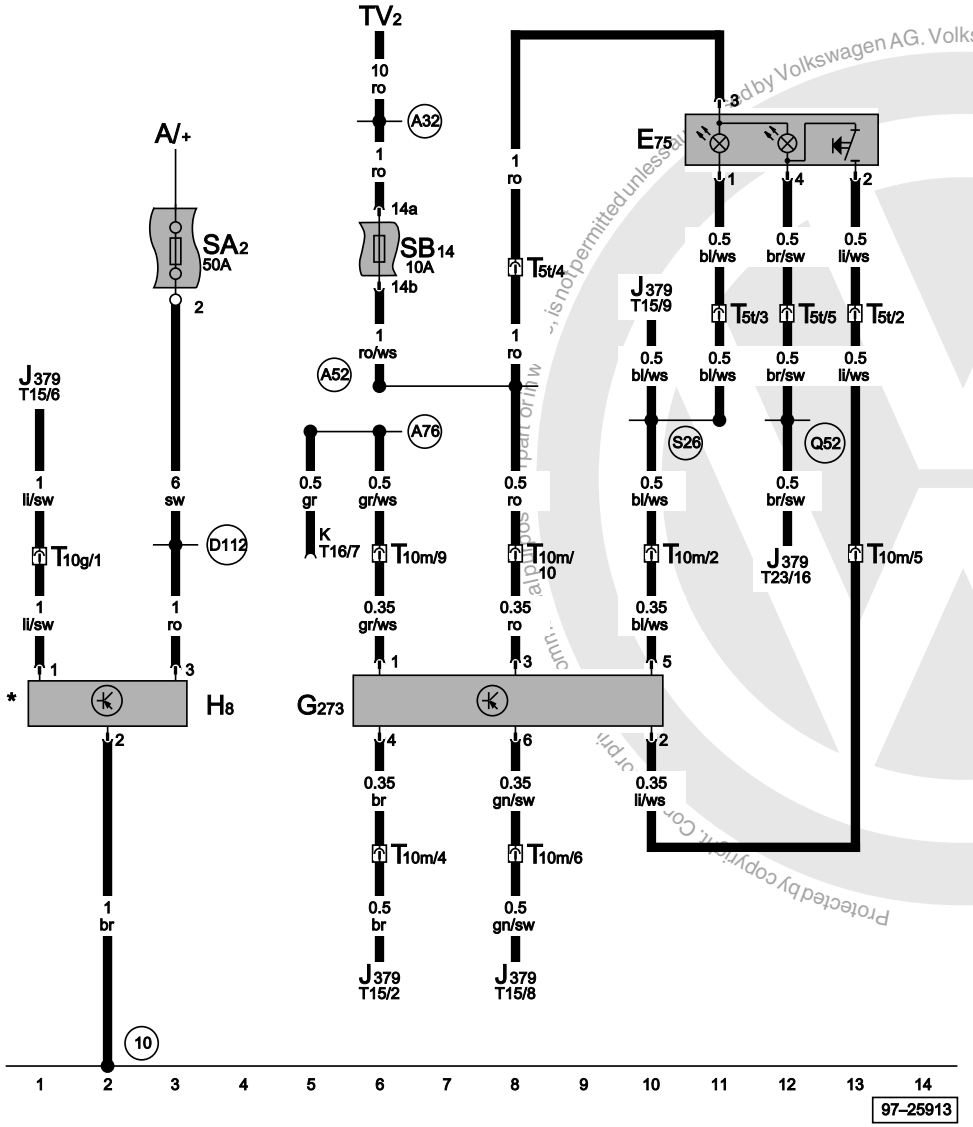

Alarm system switch, interior monitoring sensor

A	Battery
E75	Alarm system switch
G273	Interior monitoring sensor
H8	Anti-theft alarm system horn
J379	Central locking and anti-theft alarm system control unit
SA2	Fuse -2- on battery fuse box
SB14	Fuse -14- on fuse box
TV2	Terminal 30 junction box
T5t	5-pin connector, black, in protective housing for connectors
T10g	10-pin connector, red, in protective housing for connectors
T10m	10-pin connector, black, left A pillar
T15	15-pin connector
T16	16-pin connector, diagnosis
10	Earth point, in plenum chamber
A32	Positive (+) connection (30), in dash panel wiring harness
A52	Positive (+) connection -2- (30), in dash panel wiring harness
A76	Connection (diagnosis wire K), in dash panel wiring harness
D112	Connection -10-, in engine compartment wiring harness
S26	Connection (sensor/ monitoring unit) -2-, in central locking wiring harness
Q52	Connection (door contact switch), in anti-theft alarm system wiring harness
*	Only models with Great Britain alarm system

ws	=	white
sw	=	black
ro	=	red
br	=	brown
gn	=	green
bl	=	blue
gr	=	grey
li	=	purple
ge	=	yellow
or	=	orange
rs	=	pink

Protected by copyright. Copyright by Volkswagen AG. Volkswagen AG does not guarantee or accept any liability with respect to the correctness of information in this document. Copying or printing is not permitted unless authorised by Volkswagen AG.
www.ovnn.com
satelettronica

Sliding / tilting sunroof

From October 1999

For alternatives to relay and fuse positions as well as multi-pin connector wiring - see "Fitting locations" section.

Relay locations on the 11 position relay carrier:

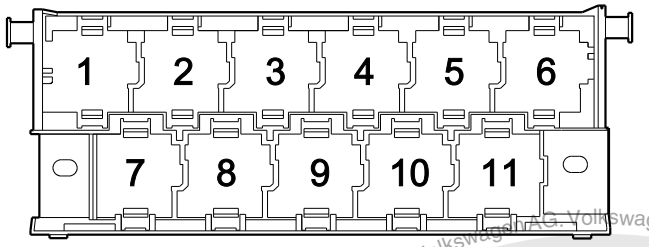

97-22850

5 - X contact relief relay (100)

Note:

- *The number in brackets behind the part designation denotes the control number on the housing.*

Fuse colours

30 A - green
25 A - white
20 A - yellow
15 A - blue
10 A - red
7.5 A - brown
5 A - beige
3 A - purple

Protected by copyright. Copying for private or commercial purposes, in part or in whole is not permitted unless authorised by Volkswagen AG. Volkswagen AG does not guarantee or accept any liability with respect to the correctness of information in this document. Copyright by Volkswagen AG.

satelettronica

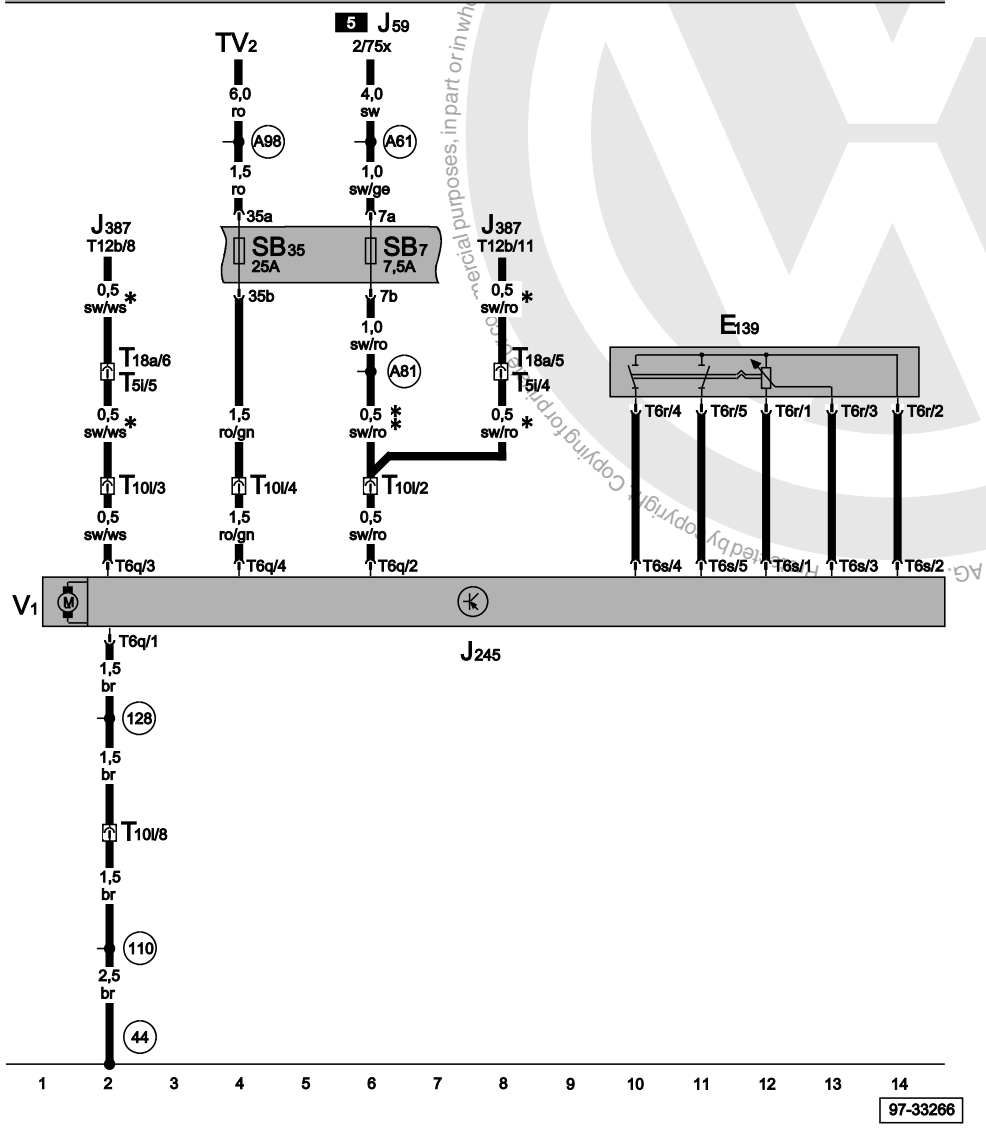

Sliding sunroof adjustment control unit, sliding sunroof adjustment regulator, sliding sunroof motor

E139	Sliding sunroof adjustment regulator
J59	X contact relief relay
J245	Sliding sunroof adjustment control unit
J387	Door control unit, front passenger's side
SB7	Fuse -7- on fuse box
SB35	Fuse -35- on fuse box
T5i	5-pin connector, on part of right A-pillar
T6q	6-pin connector, in roof
T6r	6-pin connector, in roof
T6s	6-pin connector, in roof
T10l	10-pin connector, on part of left A-pillar
T12b	12-pin connector, on door control unit, front passenger's side
T18a	18-pin connector, on right A-pillar
TV2	Terminal 30 junction box
V1	Sliding sunroof motor
44	Earth point, lower part of left A-pillar
110	Earth connection -2-, in instruments wiring harness
128	Earth connection -1-, in interior light wiring harness
A61	Positive (+) connection (X), in dash panel wiring harness
A81	Connection -2- (X), in dash panel wiring harness
A98	Positive (+) connection -4- (30), in dash panel wiring harness
*	Only models with electric window lifter
**	Only models without electric window lifter

ws	=	white
sw	=	black
ro	=	red
br	=	brown
gn	=	green
bl	=	blue
gr	=	grey
li	=	purple
ge	=	yellow
or	=	orange
rs	=	pink

satelettronica

Central locking, remote control and anti-theft alarm system

From October 1999

For alternatives to relay and fuse positions as well as multi-pin connector wiring - see "Fitting locations" section.

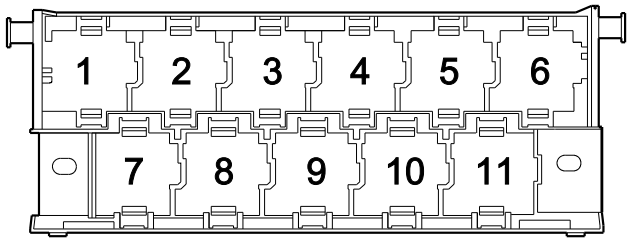

97--25507

Fuse colours

30 A - green
25 A - white
20 A - yellow
15 A - blue
10 A - red
7.5 A - brown
5 A - beige
3 A - purple

Protected by copyright. Copying for private or commercial purposes, in part or in whole, is not permitted unless authorised by Volkswagen AG. Volkswagen AG does not guarantee or accept any liability with respect to the correctness of information in this document. Copyright by Volkswagen AG.

satelettronica

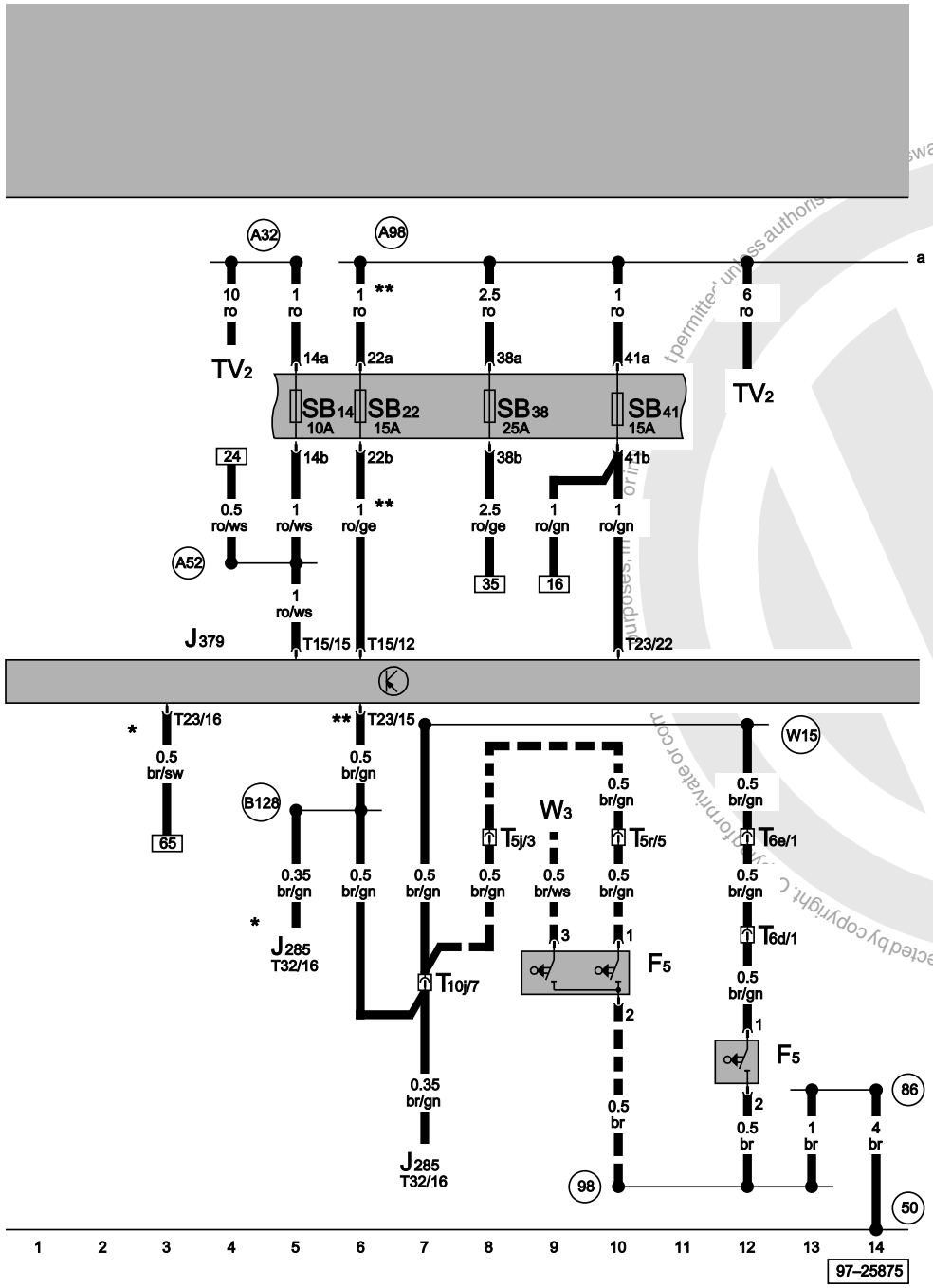

Central locking control unit and anti-theft alarm system, luggage compartment light switch

F5	Luggage compartment light switch
J285	Control unit with display in dash panel insert
J379	Central locking and anti-theft alarm system control unit
SB14	Fuse -14- on fuse box
SB22	Fuse -22- on fuse box
SB38	Fuse -38- on fuse box
SB41	Fuse -41- on fuse box
TV2	Terminal 30 junction box
W3	Luggage compartment light
T5j	5-pin connector, black, in C pillar, left
T5r	5-pin connector, black, in tailgate/bootlid, rear left
T6e	6-pin connector, on left C-pillar
T6d	6-pin connector, in tailgate/bootlid
T15	15-pin connector
T23	23-pin connector
T32	32-pin connector, blue
T10j	10-pin connector, grey, in protective housing for connectors
50	Earth point, in left luggage compartment
86	Earth connection -1-, in rear wiring harness
98	Earth connection, in tailgate/bootlid wiring harness
A32	Positive (+) connection (30), in dash panel wiring harness
A52	Positive (+) connection -2- (30), in dash panel wiring harness
B128	Connection (luggage compartment light), in interior wiring harness
W15	Connection -1- (luggage compartment light), in rear wiring harness
*	Only models with remote control
**	Only models with alarm system
<fo:external-graphic src="/../PDOC/samba/tools/png-convert/out//slp/ft_icons/	Only models Polo Variant

ws = white

Protected by copyright. Copying for private or commercial purposes, in part or in whole, is not permitted unless authorised by Volkswagen AG. Volkswagen AG does not guarantee the correctness of information in this document.

satelettronica

sw	=	black	m_m_m.
ro	=	red	png"
br	=	brown	content-
gn	=	green	width="2
bl	=	blue	0pt"
gr	=	grey	scaling="
li	=	purple	uniform"/
ge	=	yellow	>
or	=	orange	
rs	=	pink	

Protected by copyright. Copying for private or commercial purposes, in part or in whole, is not permitted unless authorised by Volkswagen AG. Volkswagen AG does not guarantee or accept any liability with respect to the correctness of information in this document. Copyright by Volkswagen AG.

satelettronica

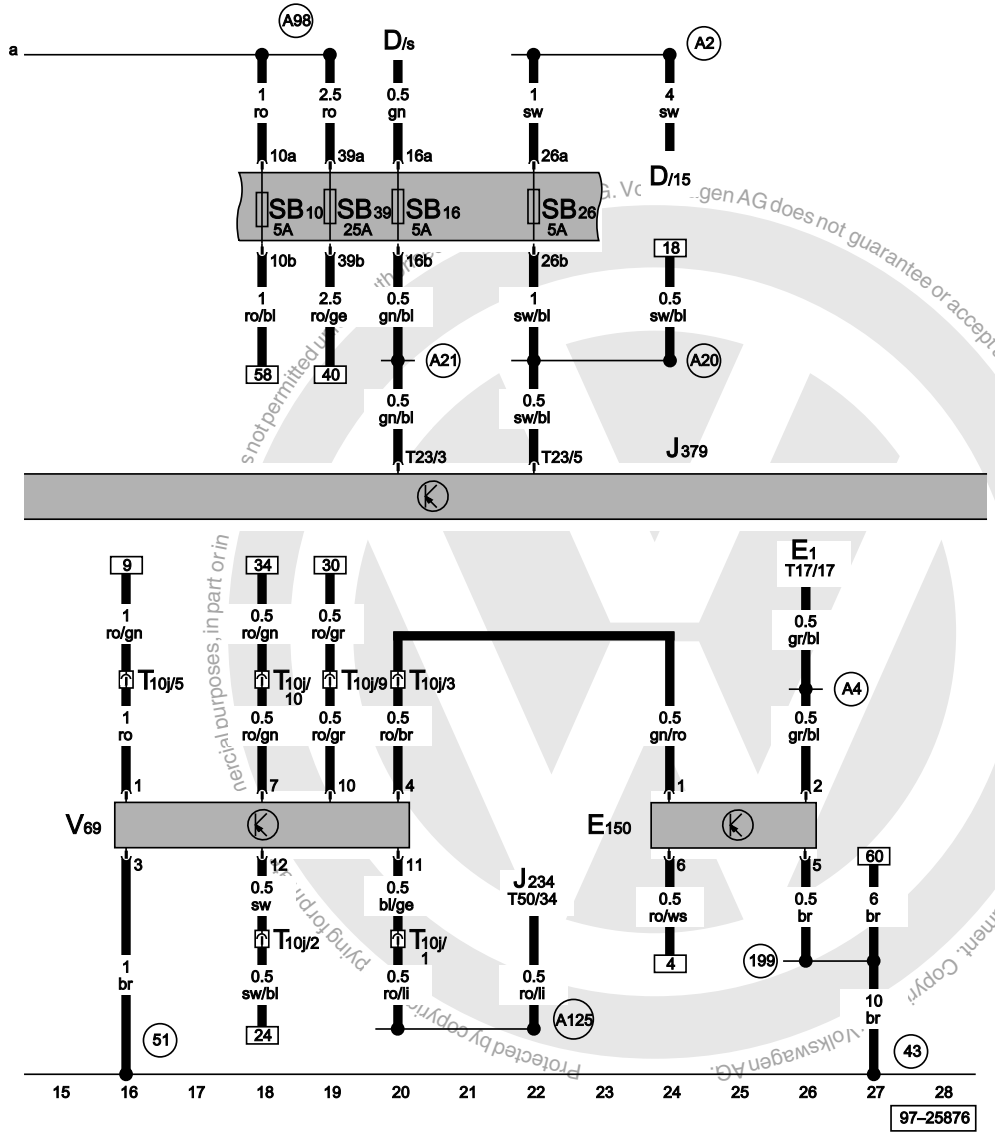

Central locking control unit and anti-theft alarm system, central locking pump with control unit

D	Ignition/starter switch
E1	Lighting switch
E150	Interior locking switch, driver's side
J234	Airbag control unit
J379	Central locking and anti-theft alarm system control unit
SB10	Fuse -10- on fuse box
SB16	Fuse -16- on fuse box
SB26	Fuse -26- on fuse box
SB39	Fuse -39- on fuse box
T10j	10-pin connector, grey, in protective housing for connectors
T17	17-pin connector
T23	23-pin connector
T50	50-pin connector
V69	Central locking pump with control unit
43	Earth point, lower part of right A-pillar
51	Earth point, in right luggage compartment
199	Earth connection -3-, in dash panel wiring harness
A2	Positive (+) connection (15), in dash panel wiring harness
A4	Positive (+) connection (58b), in dash panel wiring harness
A20	Connection (15a), in dash panel wiring harness
A21	Connection (86s), in dash panel wiring harness
A98	Positive (+) connection -4- (30), in dash panel wiring harness
A125	Connection (crash signal), in dash panel wiring harness

ws	=	white
sw	=	black
ro	=	red
br	=	brown
gn	=	green
bl	=	blue
gr	=	grey
li	=	purple
ge	=	yellow
or	=	orange
rs	=	pink

satelettronica

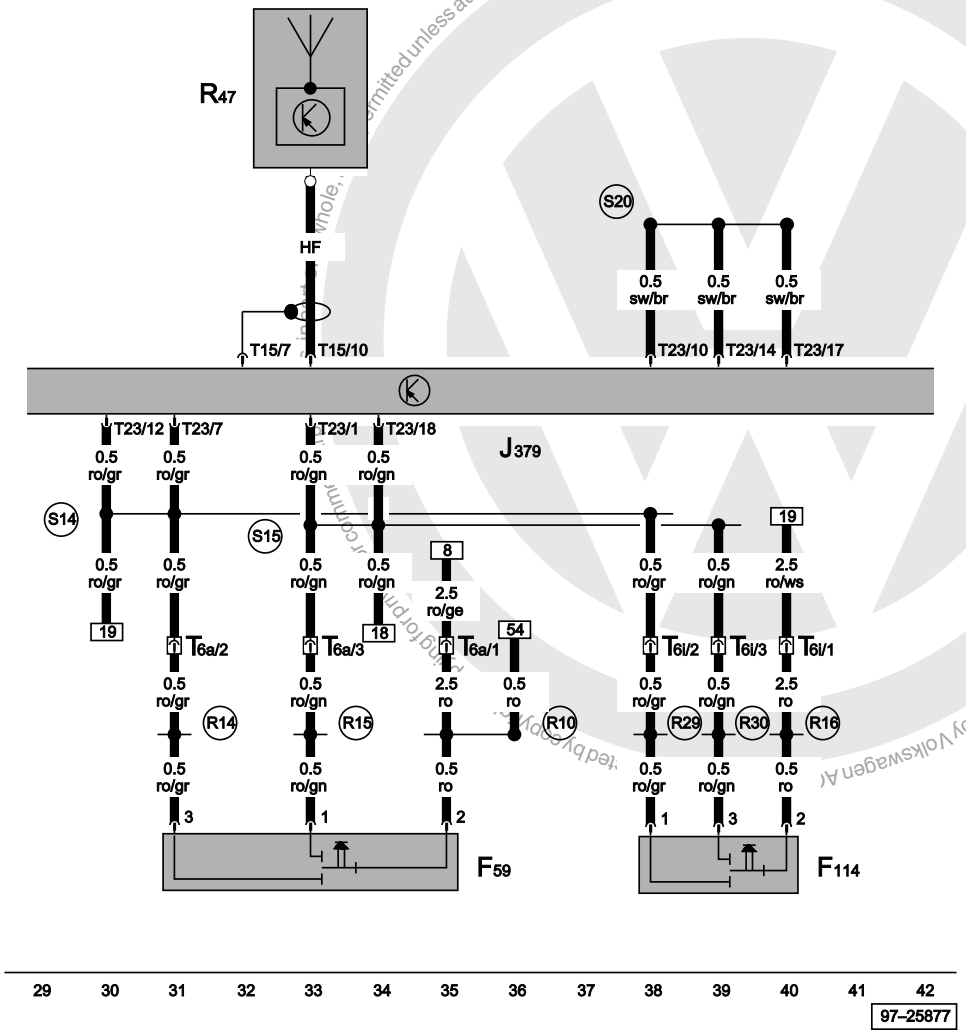

Central locking control unit and anti-theft alarm system, tailgate/bootlid central locking switch (driver's side), tailgate/bootlid central locking switch (front passenger's side)

F59	Tailgate/bootlid central locking switch (driver's side)
F114	Tailgate/bootlid central locking switch (front passenger's side)
J379	Central locking and anti-theft alarm system control unit
R47	Central locking and anti-theft alarm system aerial
T6a	6-pin connector, A pillar, left
T6i	6-pin connector, A pillar, front passenger's seat, right
T15	15-pin connector
T23	23-pin connector
R10	Positive (+) connection -1- (30), in door wiring harness - driver's side
R14	Connection -1- (open), in door wiring harness, driver's side
R15	Connection -2- (closed), in door wiring harness, driver's side
R16	Positive (+) connection -1- (30), in door wiring harness - front passenger's side
R29	Connection -1- (open), in door wiring harness, front passenger's side
R30	Connection -2- (closed), in door wiring harness, driver's side
S14	Connection (open), in central locking wiring harness
S15	Connection (closed), in central locking wiring harness
S20	Connection -4-, in central locking wiring harness

ws	=	white
sw	=	black
ro	=	red
br	=	brown
gn	=	green
bl	=	blue
gr	=	grey
li	=	purple
ge	=	yellow
or	=	orange
rs	=	pink

satelettronica

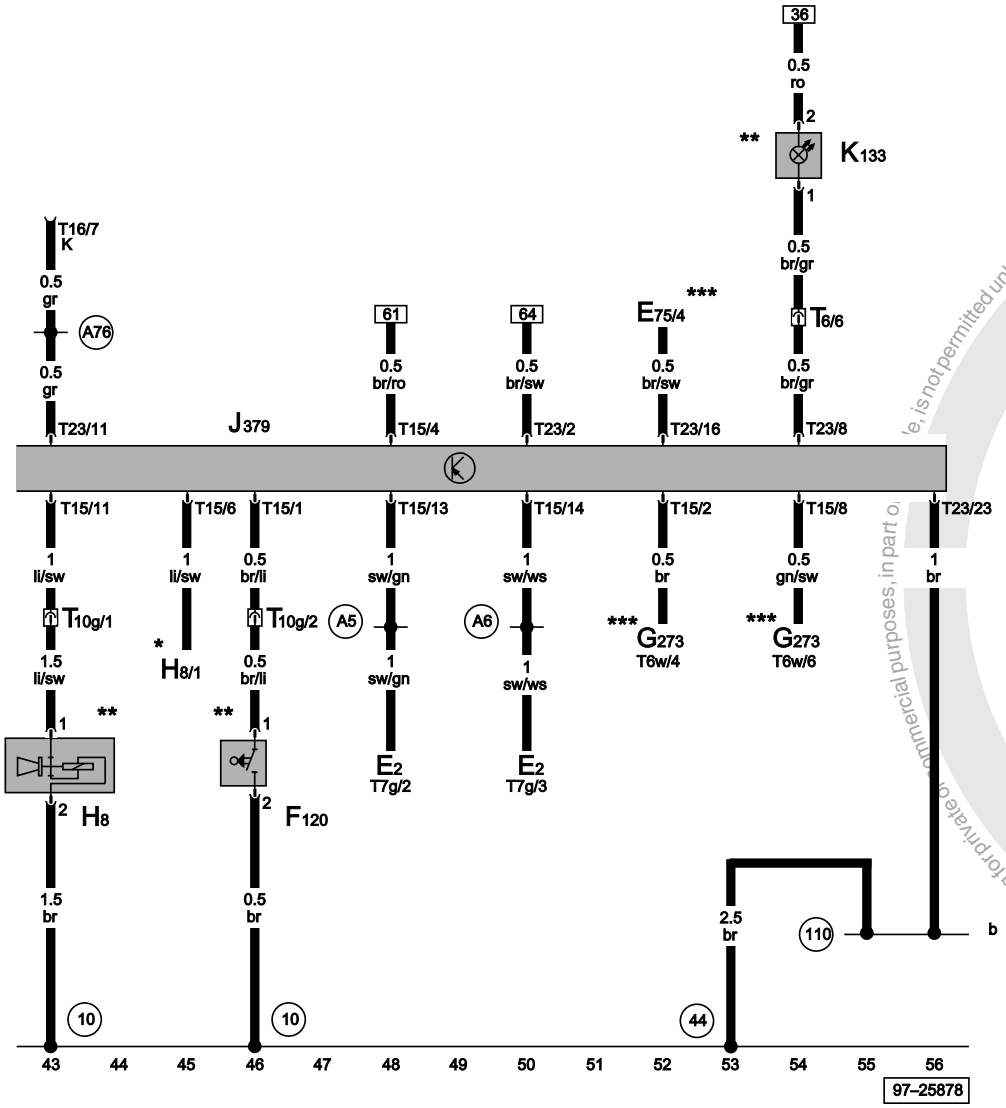

Anti-theft alarm system/rodent repellent system contact switch, anti-theft alarm system horn, central locking warning lamp -SAFE-

E2	Turn signal switch
E75	Alarm system switch
F120	Anti-theft alarm/rodent repellent system contact switch
G273	Interior monitoring sensor
H8	Anti-theft alarm system horn
J379	Central locking and anti-theft alarm system control unit
K133	Central locking warning lamp -SAFE-
T6	6-pin connector, A pillar, left
T6w	6-pin connector, B pillar, interior monitoring sensor
T7g	7-pin connector
T10g	10-pin connector, red, in protective housing for connectors
T15	15-pin connector
T16	16-pin connector, self-diagnosis connection in lower console
T23	23-pin connector
10	Earth point, in plenum chamber
44	Earth point, lower part of left A-pillar
110	Earth connection -2-, in instruments wiring harness
A5	Positive (+) connection (right turn signal), in dash panel wiring harness
A6	Positive (+) connection (left turn signal), in dash panel wiring harness
A76	Connection (diagnosis wire K), in dash panel wiring harness
*	Only models with Great Britain alarm system
**	Only models with alarm system
***	Only models with interior monitoring

ws	=	white
sw	=	black
ro	=	red
br	=	brown
gn	=	green
bl	=	blue
gr	=	grey
li	=	purple
ge	=	yellow
or	=	orange
rs	=	pink

satelettronica

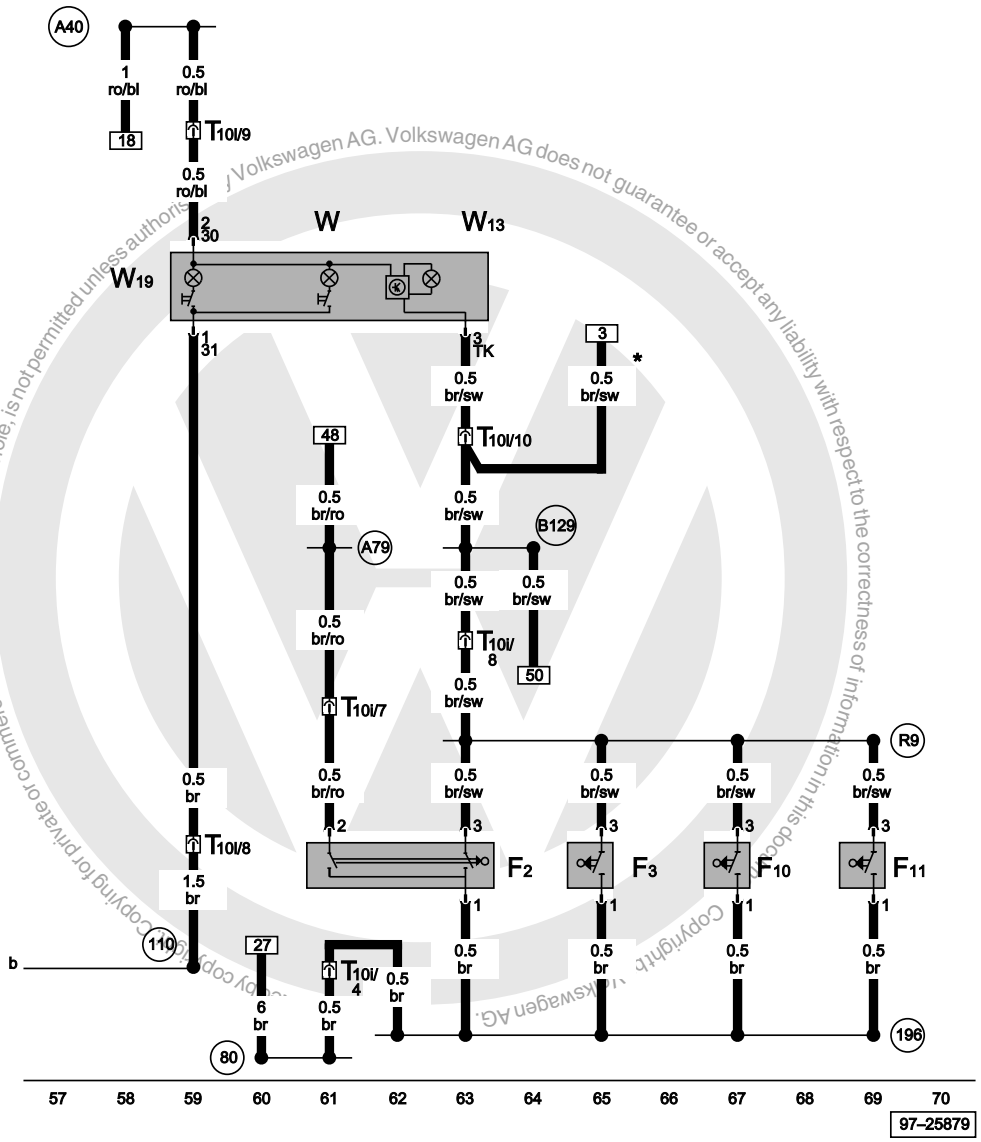

Door contact switch driver's side, door contact switch front passenger's side, door contact switch rear left, door contact switch rear right, front interior light

F2	Door contact switch, driver's side
F3	Door contact switch, front passenger's side
F10	Rear left door contact switch
F11	Rear right door contact switch
T10i	10-pin connector, orange, in protective housing for connectors
T10l	10-pin connector, black, left A pillar
W	Interior light, front
W13	Front passenger reading lamp
W19	Reading lamp, driver's side
80	Earth connection -1-, in instruments wiring harness
110	Earth connection -2-, in instruments wiring harness
196	Earth connection -3-, in rear wiring harness
A40	Positive (+) connection-1- (30), in instruments wiring harness
A79	Connection (hot light switch), in dash panel wiring harness
B129	Connection (interior light, 311), in interior wiring harness
R9	Connection (door contact switch), in rear wiring harness
*	Only models with radio-operated remote control

ws	=	white
sw	=	black
ro	=	red
br	=	brown
gn	=	green
bl	=	blue
gr	=	grey
li	=	purple
ge	=	yellow
or	=	orange
rs	=	pink

satelettronica

Electric windows

From October 1999

For alternatives to relay and fuse positions as well as multi-pin connector wiring - see "Fitting locations" section.

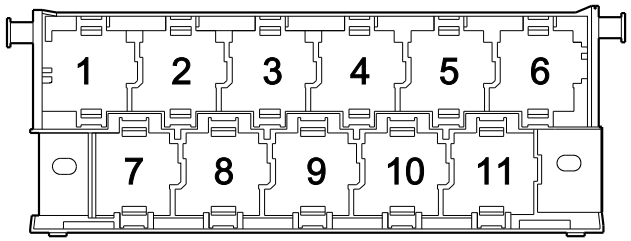

97--25507

Fuse colours

30 A - green
25 A - white
20 A - yellow
15 A - blue
10 A - red
7.5 A - brown
5 A - beige
3 A - purple

Protected by copyright. Copying for private or commercial purposes, in part or in whole, is not permitted unless authorised by Volkswagen AG. Volkswagen AG does not guarantee or accept any liability with respect to the correctness of information in this document. Copyright by Volkswagen AG.

satelettronica

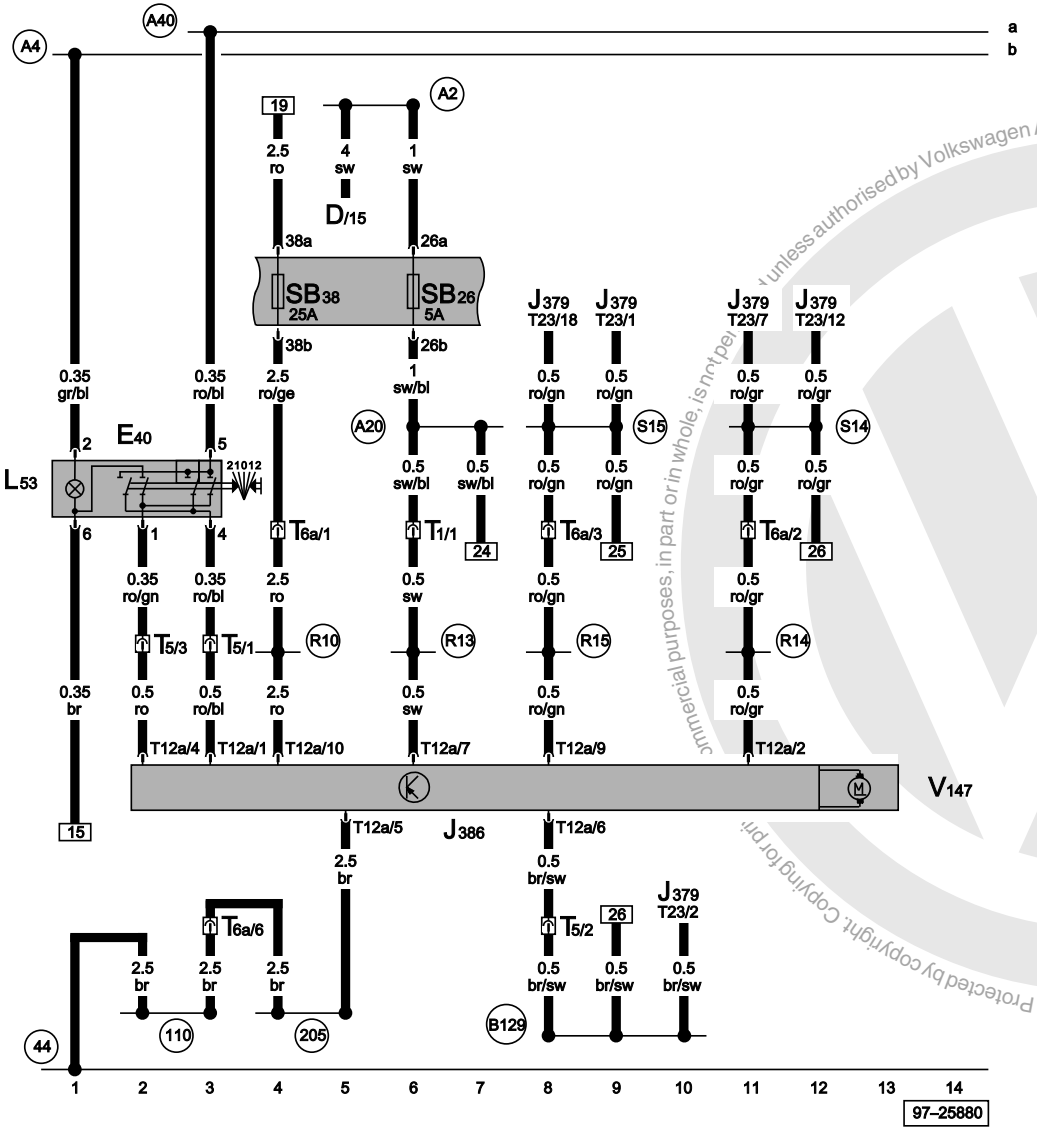

Door control unit, driver's side, front left electric window switch, electric window motor, driver's side, window switch light bulb

D	Ignition/starter switch
E40	Front left electric window switch
J379	Central locking and anti-theft alarm system control unit
J386	Door control unit, driver's side
L53	Window switch light bulb
SB26	Fuse -26- on fuse box
SB38	Fuse -38- on fuse box
T1	1-pin connector, black, left A pillar
T5	5-pin connector, A-pillar, driver's seat
T6a	6-pin connector, A pillar, left
T12a	12-pin connector, in front driver's door
T23	23-pin connector
V147	Electric window motor, driver's side
44	Earth point, lower part of left A-pillar
110	Earth connection -2-, in instruments wiring harness
205	Earth connection, in door wiring harness - driver's side
A2	Positive (+) connection (15), in dash panel wiring harness
A20	Connection (15a), in dash panel wiring harness
B129	Connection (interior light, 311), in interior wiring harness
R10	Positive (+) connection -1- (30), in door wiring harness - driver's side
R13	Positive (+) connection -4- (15), in door wiring harness - driver's side
R14	Connection -1- (open), in door wiring harness, driver's side
R15	Connection -2- (closed), in door wiring harness, driver's side
S14	Connection (open), in central locking wiring harness
S15	Connection (closed), in central locking wiring harness

ws	=	white
sw	=	black
ro	=	red
br	=	brown
gn	=	green
bl	=	blue
gr	=	grey
li	=	purple
ge	=	yellow
or	=	orange
rs	=	pink

Protected by copyright. Copying for private or commercial purposes, in part or in whole, is not permitted unless authorised by Volkswagen AG. Volkswagen AG does not guarantee or accept any liability with respect to the correctness of information in this document. Copyright by Volkswagen AG.

satelettronica

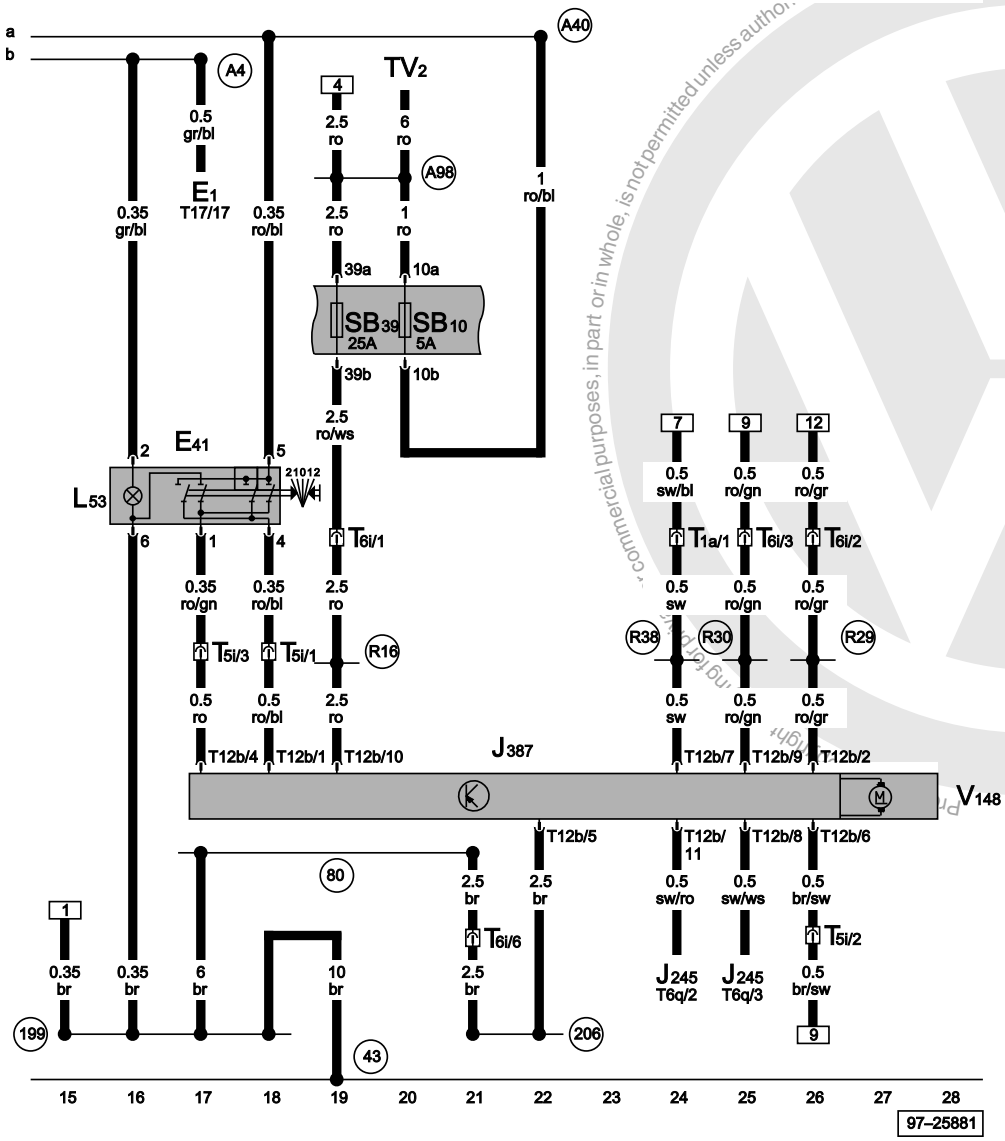

ws	=	white
sw	=	black
ro	=	red
br	=	brown
gn	=	green
bl	=	blue
gr	=	grey
li	=	purple
ge	=	yellow
or	=	orange
rs	=	pink

Door control unit, passenger's side, front right electric window switch, electric window motor, passenger's side, window switch light bulb

E1	Lighting switch
E41	Front right electric window switch
J245	Sliding sunroof adjustment control unit
J387	Door control unit, front passenger's side
L53	Window switch light bulb
SB10	Fuse -10- on fuse box
SB39	Fuse -39- on fuse box
T5i	5-pin connector, A-pillar front passenger's seat
T6i	6-pin connector, A pillar, front passenger's seat, right
T6q	6-pin connector, in roof
T12b	12-pin connector, in front passenger's door
T17	17-pin connector
TV2	Terminal 30 junction box
V148	Electric window motor, front passenger's side
T1a	1-pin connector, black, right A pillar
43	Earth point, lower part of right A-pillar
80	Earth connection -1-, in instruments wiring harness
199	Earth connection -3-, in dash panel wiring harness
206	Earth connection, in door wiring harness - front passenger's side
A40	Positive (+) connection-1- (30), in instruments wiring harness
A98	Positive (+) connection -4- (30), in dash panel wiring harness
R16	Positive (+) connection -1- (30), in door wiring harness - front passenger's side
R29	Connection -1- (open), in door wiring harness, front passenger's side
R30	Connection -2- (closed), in door wiring harness, driver's side
R38	Connection -1- (window lifters), in door wiring harness, front passenger's side
*	Only models with sliding sunroof

satelettronica

Airbag system

⇒ Driver's and front passenger's airbags
⇒ Side airbags
⇒ Belt tensioners

From October 1999

For alternatives to relay and fuse positions as well as multi-pin connector wiring - see "Fitting locations" section.

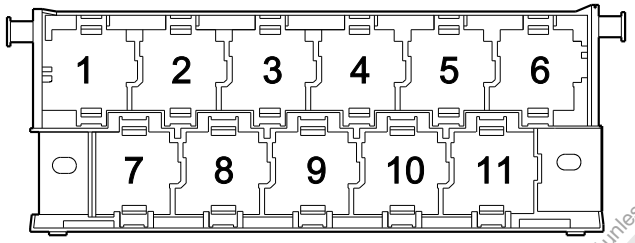

97--25507

Fuse colours

30 A - green
25 A - white
20 A - yellow
15 A - blue
10 A - red
7.5 A - brown
5 A - beige
3 A - purple

Protected by copyright. Copying for private or commercial purposes, in part or in whole, is not permitted unless authorised by Volkswagen AG. Volkswagen AG does not guarantee or accept any liability with respect to the correctness of information in this document. Copyright by Volkswagen AG.

satelettronica

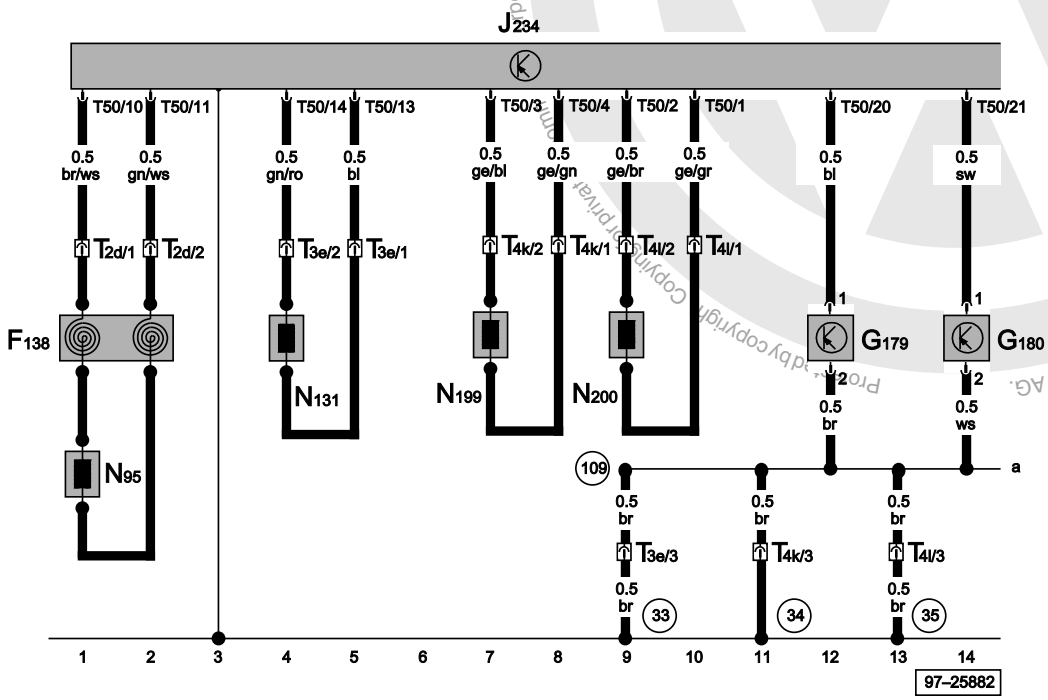

Airbag control unit, airbag coil connector, return spring with slip ring, side airbag crash sensor, driver's side, side airbag crash sensor, front passenger's side

F138	Airbag coil connector, return spring with slip ring
G179	Side airbag crash sensor, driver's side
G180	Side airbag crash sensor, front passenger's side
J234	Airbag control unit
N95	Airbag igniter, driver's side
N131	Airbag igniter 1, front passenger's side
N199	Side airbag igniter, driver's side
N200	Side airbag igniter, front passenger's side
T2d	2-pin connector, yellow, in steering wheel
T3e	3-pin connector
T4k	4-pin connector, yellow, in driver's seat
T4l	4-pin connector, yellow, in front passenger's seat
T50	50-pin connector
33	Earth point, behind dash panel, right
34	Earth point, under driver's seat
35	Earth point, under front passenger's seat
109	Earth connection, in airbag wiring harness

ws	=	white
sw	=	black
ro	=	red
br	=	brown
gn	=	green
bl	=	blue
gr	=	grey
li	=	purple
ge	=	yellow
or	=	orange

Copyright by Volkswagen AG. Reproduced by copyright privileges, in part or in whole, is not permitted unless authorised. Copyright by Volkswagen AG. Reproduced by copyright privileges, in part or in whole, is not permitted unless authorised. Copyright by Volkswagen AG does not guarantee or accept any liability with respect to the correctness of information in this document.
satelettronica

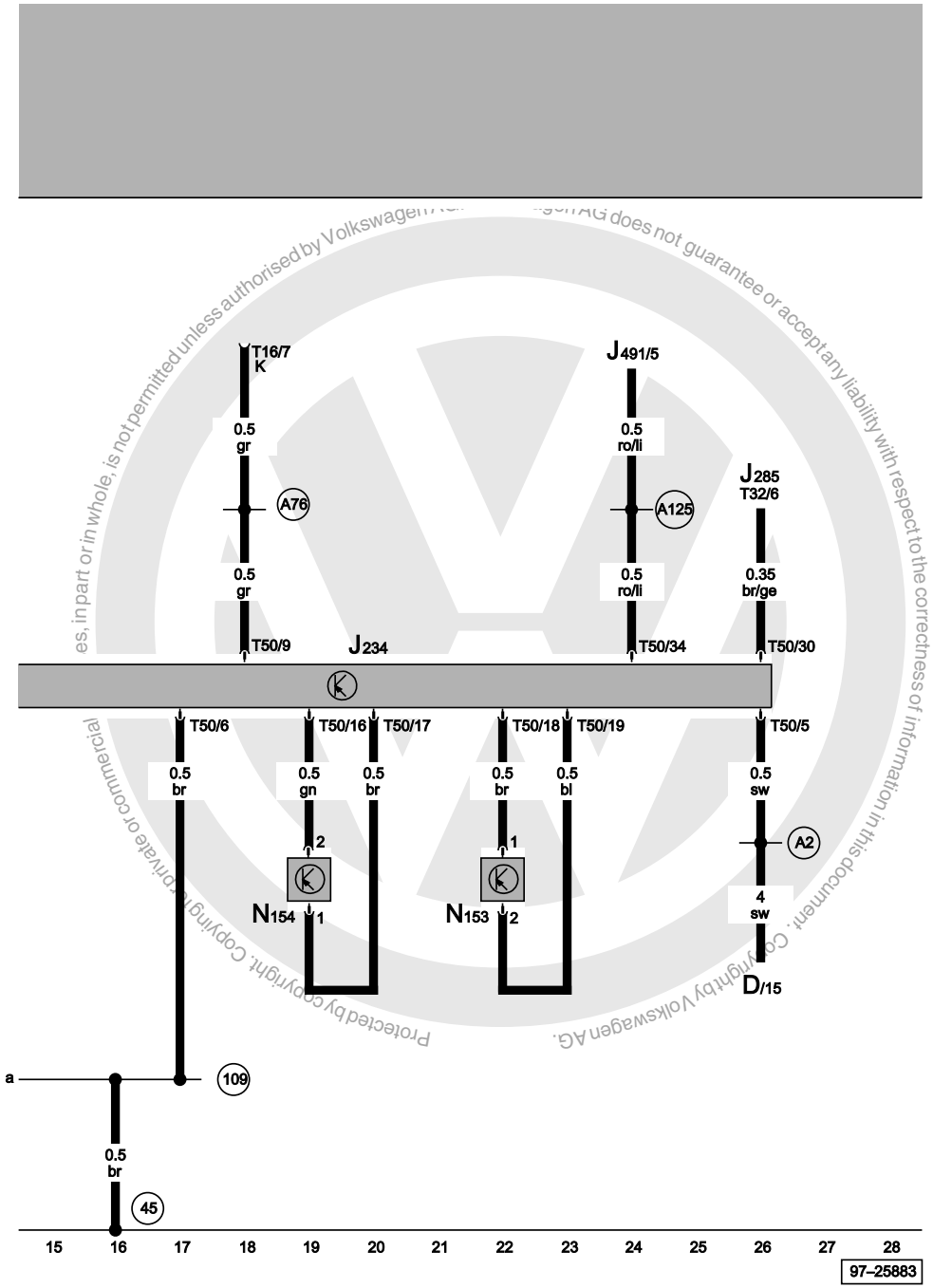

Protected by copyright. Copying for private or commercial purposes, in part or in whole, is not permitted unless authorised by Volkswagen AG. Volkswagen AG does not guarantee or accept any liability with respect to the correctness of information in this document. Copyright by Volkswagen AG.

Airbag control unit, igniter -1- belt tensioner, driver's side, igniter -2- belt tensioner front passenger's side

D	Ignition/starter switch
J234	Airbag control unit
J285	Control unit with display in dash panel insert
J491	Fuel shut-off control unit (Crash)
N153	Belt tensioner igniter -1-, driver's side
N154	Belt tensioner igniter -2-, front passenger's side
T16	16-pin connector, diagnosis
T32	32-pin connector, blue
T50	50-pin connector
45	Earth point, behind dash panel - centre
109	Earth connection, in airbag wiring harness
A2	Positive (+) connection (15), in dash panel wiring harness
A76	Connection (diagnosis wire K), in dash panel wiring harness
A125	Connection (crash signal), in dash panel wiring harness

ws	=	white
sw	=	black
ro	=	red
br	=	brown
gn	=	green
bl	=	blue
gr	=	grey
li	=	purple
ge	=	yellow
or	=	orange
rs	=	pink

satelettronica

Anti-lock brake system (ABS) und anti-lock brake system (ABS), with electronic differential lock (EDL)

From October 1999

For alternatives to relay and fuse positions as well as multi-pin connector wiring - see "Fitting locations" section.

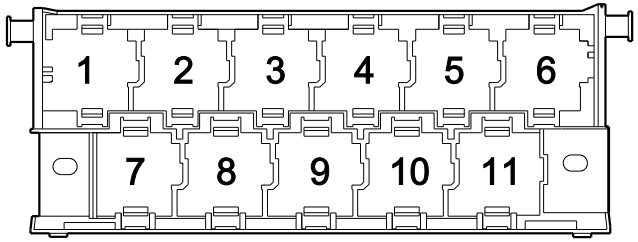

97-22850

Fuse colours

30 A - green
25 A - white
20 A - yellow
15 A - blue
10 A - red
7.5 A - brown
5 A - beige
3 A - purple

Protected by copyright. Copying for private or commercial purposes, in part or in whole, is not permitted unless authorised by Volkswagen AG. Volkswagen AG does not guarantee or accept any liability with respect to the correctness of information in this document. Copyright by Volkswagen AG.

satelettronica

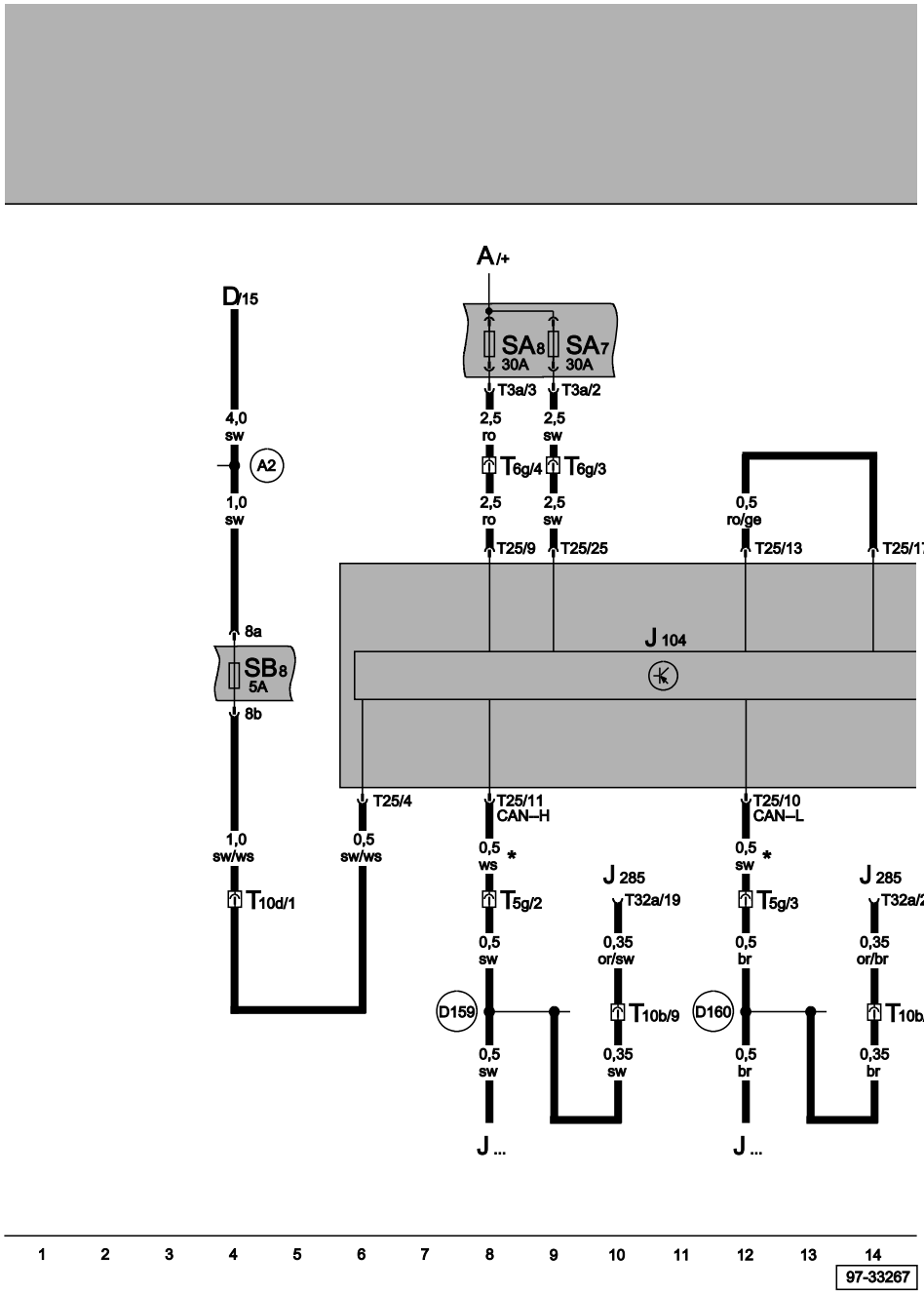

ABS with EDL control unit

A	Battery
D	Ignition/starter switch
J...	Engine control units
J104	ABS with EDL control unit
J285	Control unit with display in dash panel insert
SA7	Fuse -7- on battery fuse box
SA8	Fuse -8- on battery fuse box
SB8	Fuse -8- on fuse box
T3a	3-pin connector, on battery fuse box
T5g	5-pin connector, pink, coupling station under relay carrier, left
T6g	6-pin connector, black, coupling station under relay carrier, left
T10b	10-pin connector, white, coupling station under relay carrier, left
T10d	10-pin connector, pink, coupling station under relay carrier, left
T25	25-pin connector
T32a	32-pin connector, green, on dash panel insert
A2	Positive (+) connection (15), in dash panel wiring harness
D159	Connection (high bus), in engine compartment wiring harness
D160	Connection (low bus), in engine compartment wiring harness
*	Data wire (CAN bus)

ws	=	white
sw	=	black
ro	=	red
br	=	brown
gn	=	green
bl	=	blue
gr	=	grey
li	=	purple
ge	=	yellow
or	=	orange
rs	=	pink

Protected by copyright. Copying for private or commercial purposes, in part or in whole, is not permitted unless authorised by Volkswagen AG. Volkswagen AG does not guarantee or accept any liability with respect to the correctness of information in this document. Copyright by Volkswagen AG.
satelettronica

ABS with EDL control unit, differential lock valve 1, differential lock valve 2, ABS inlet valve, rear right, ABS inlet valve, rear left

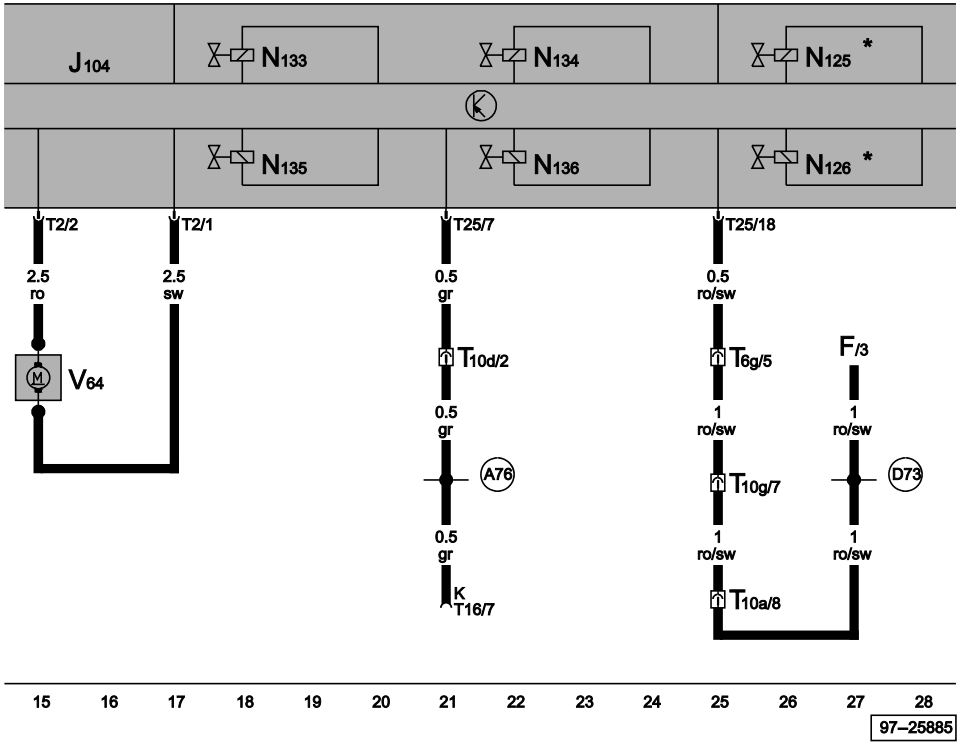

F	Brake light switch
J104	ABS with EDL control unit
N125	Differential lock valve 1
N126	Differential lock valve 2
N133	ABS inlet valve, rear right
N134	ABS inlet valve, rear left
N135	ABS outlet valve, rear right
N136	ABS outlet valve, rear left
T2	2-pin connector
T6g	6-pin connector, black, in protective housing for connectors
T10a	10-pin connector, black, in protective housing for connectors
T10d	10-pin connector, pink, in protective housing for connectors
T10g	10-pin connector, red, in protective housing for connectors
T16	16-pin connector, diagnosis
T25	25-pin connector
V64	ABS hydraulic pump
A76	Connection (diagnosis wire K), in dash panel wiring harness
D73	Positive (+) connection (54), in engine compartment wiring harness
*	Only models with EDL

ws	=	white
sw	=	black
ro	=	red
br	=	brown
gn	=	green
bl	=	blue
gr	=	grey
li	=	purple
ge	=	yellow
or	=	orange
rs	=	pink

Protected by copyright. Copying for private or commercial purposes, in part or in whole, is not permitted unless authorised by Volkswagen AG. Volkswagen AG does not guarantee or accept any liability with respect to the correctness of information in this document. Copyright by Volkswagen AG.
satelettronica

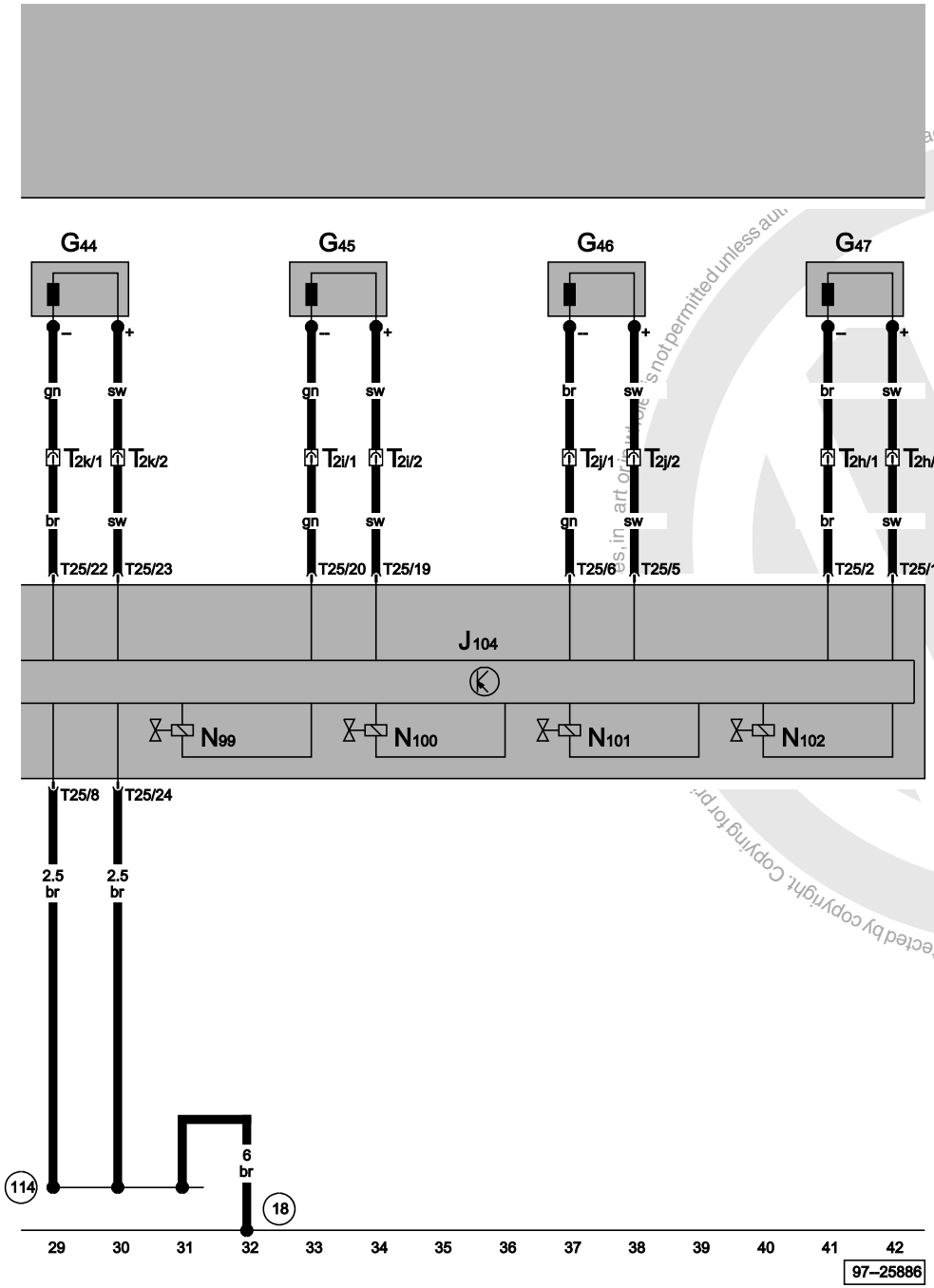

ABS with EDL control unit, rear right speed sensor, front right speed sensor

G44	Rear right speed sensor
G45	Front right speed sensor
G46	Rear left speed sensor
G47	Front left speed sensor
J104	ABS with EDL control unit
N99	ABS inlet valve, front right
N100	ABS outlet valve, front right
N101	ABS inlet valve, front left
N102	ABS outlet valve, front left
T2h	2-pin connector, on front left ABS sensor
T2i	2-pin connector, on front right ABS sensor
T2j	2-pin connector, on rear left ABS sensor
T2k	2-pin connector, on rear right ABS sensor
T25	25-pin connector
18	Earth point, on engine block
114	Earth connection, in automatic gearbox wiring harness

ws	=	white
sw	=	black
ro	=	red
br	=	brown
gn	=	green
bl	=	blue
gr	=	grey
li	=	purple
ge	=	yellow
or	=	orange
rs	=	pink

Protected by copyright. Copying for priv... Copyright by Volkswagen AG. Volkswagen AG does not guarantee or assume any liability with respect to the correctness of information in this document. Copyright by Volkswagen AG. ...s not permitted unless au... ...s, in art or w... ...ote
satelettronica

Exterior mirror, electrically adjustable and heated

From October 1999

For alternatives to relay and fuse positions as well as multi-pin connector wiring - see "Fitting locations" section.

Relay locations on the 11 position relay carrier:

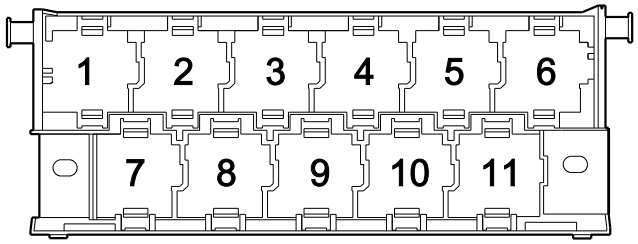

97-22850

4 - Heated exterior mirror relay (404)

Note:

- *The number in brackets behind the part designation denotes the control number on the housing.*

Fuse colours

30 A - green
25 A - white
20 A - yellow
15 A - blue
10 A - red
7.5 A - brown
5 A - beige
3 A - purple

Protected by copyright. Copying for private or commercial purposes, in part or in whole, is not permitted unless authorised by Volkswagen AG. Volkswagen AG does not guarantee or accept any liability with respect to the correctness of information in this document. Copyright by Volkswagen AG.
satelettronica

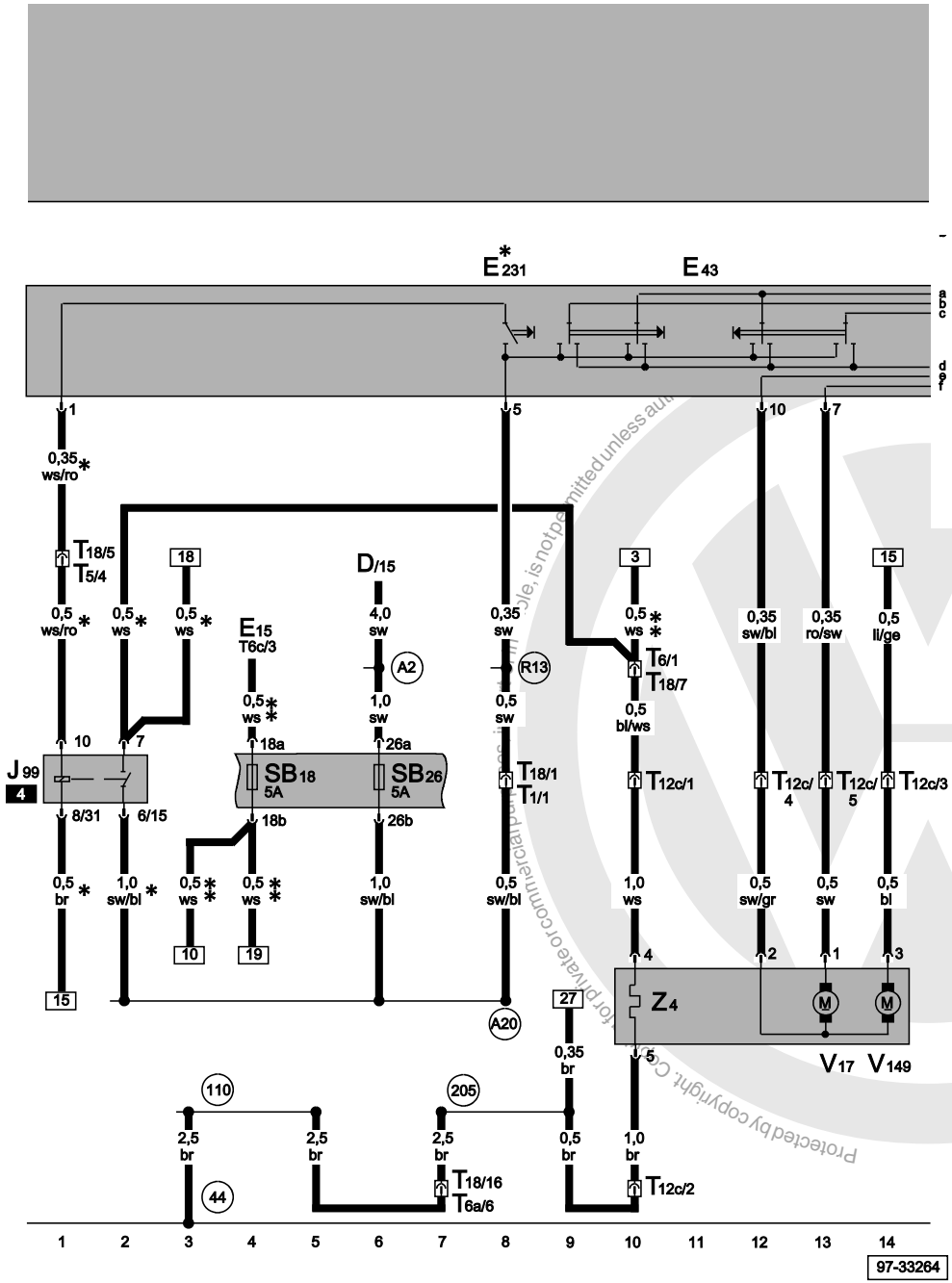

Mirror adjustment switch, mirror adjustment motor (driver's side), heated exterior mirrors driver's side

D	Ignition/starter switch
E15	Heated rear window switch
E43	Mirror adjustment switch
E231	Exterior mirror heating button
J99	Heated exterior mirror relay
SB18	Fuse -18- on fuse box
SB26	Fuse -26- on fuse box
T1	Single connector, on part of left A-pillar
T5	5-pin connector, on part of left A-pillar
T6	6-pin connector, on left A-pillar
T6a	6-pin connector, on left A-pillar
T6c	6-pin connector
T12c	12-pin connector, on exterior mirror driver's side
T18	18-pin connector, on part of left A-pillar
V17	Mirror adjustment motor, driver's side
V149	Mirror adjustment motor, driver's side
Z4	Heated exterior mirror, driver's side
44	Earth point, lower part of left A-pillar
110	Earth connection -2-, in instruments wiring harness
205	Earth connection, in door wiring harness - driver's side
A2	Positive (+) connection (15), in dash panel wiring harness
A20	Positive (+) connection (15a), in dash panel wiring harness
R13	Positive (+) connection -4- (15), in door wiring harness - driver's side
*	Only seperate heated exterior mirror
**	Only heated exterior mirror

ws	=	white
sw	=	black
ro	=	red
br	=	brown
gn	=	green
bl	=	blue
gr	=	grey
li	=	purple
ge	=	yellow
or	=	orange
rs	=	pink

Protected by copyright. Copying for private or commercial purposes, in part or in whole, is not permitted unless authorised by Volkswagen AG. Volkswagen AG does not guarantee or accept any liability with respect to the correctness of information in this document. Copyright by Volkswagen AG.
satelettronica

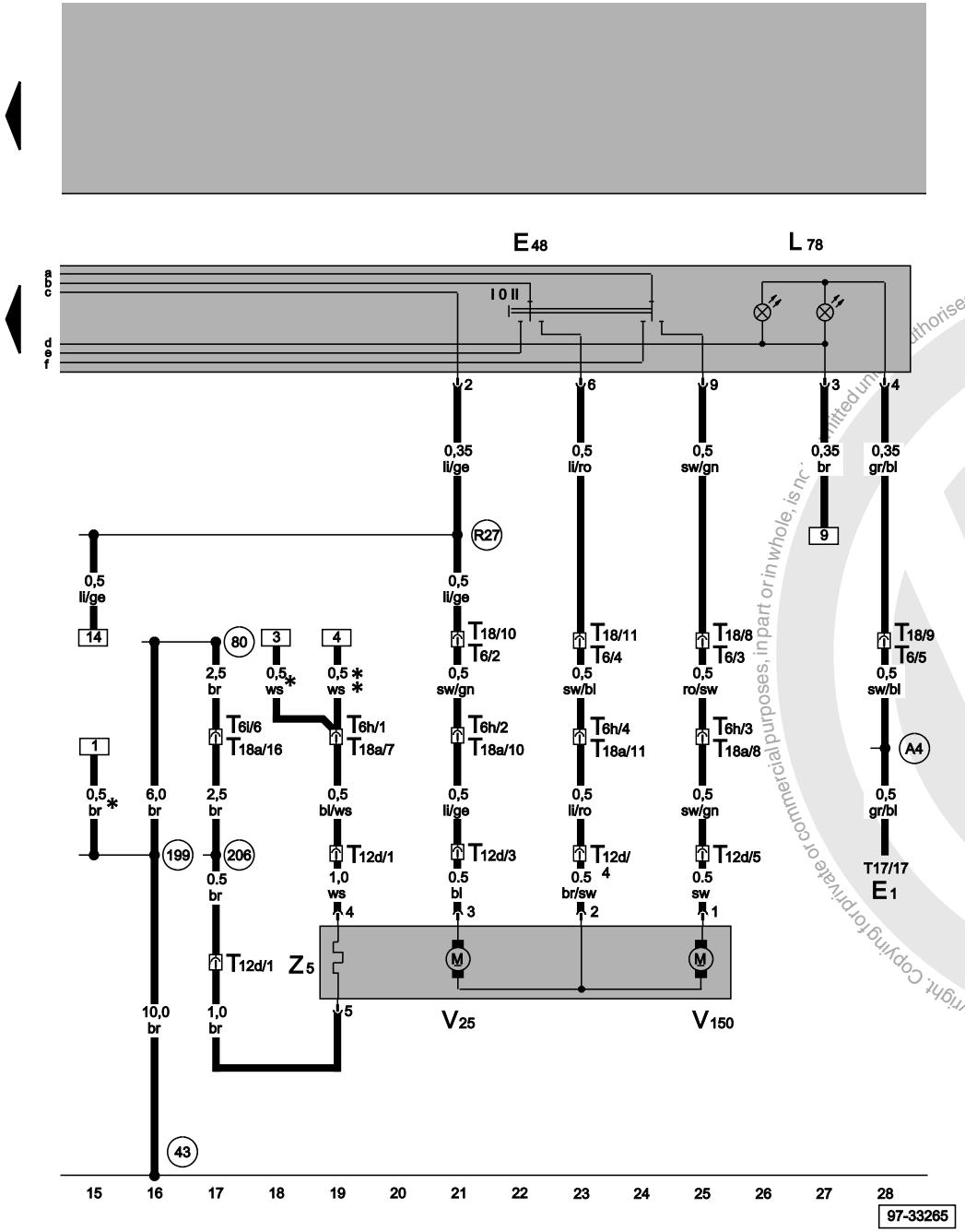

Mirror adjustment change-over switch, mirror adjustment switch illumination, mirror adjustment motor (front passenger's side), heated exterior mirrors front passenger's side

E1	Light switch
E48	Mirror adjustment change-over switch
L78	Mirror adjustment switch illumination
T6	6-pin connector, on left A-pillar
T6h	6-pin connector, on right A-pillar
T6i	6-pin connector, on right A-pillar
T12d	12-pin connector, on exterior mirror front passenger's side
T17	17-pin connector, on light switch
T18	18-pin connector, on part of left A-pillar
T18a	18-pin connector, on right A-pillar
V25	Mirror adjustment motor, front passenger's side
V150	Mirror adjustment motor, front passenger's side
Z5	Heated exterior mirror, front passenger's side
43	Earth point, lower part of right A-pillar
80	Earth connection -1-, in dash panel wiring harness
199	Earth connection -3-, in dash panel wiring harness
206	Earth connection, in door wiring harness - front passenger's side
A4	Positive (+) connection (58b), in dash panel wiring harness
R27	Connection (mirror adjustment), in door wiring harness - driver's side
*	Only seperate heated exterior mirror
**	Only heated exterior mirror

ws	=	white
sw	=	black
ro	=	red
br	=	brown
gn	=	green
bl	=	blue
gr	=	grey
li	=	purple
ge	=	yellow
or	=	orange
rs	=	pink

satelettronica

Radio systems

⇒ alpha
⇒ beta
⇒ beta with CD-changer
⇒ gamma
⇒ gamma with CD-changer

From October 1999

For alternatives to relay and fuse positions as well as multi-pin connector wiring - see "Fitting locations" section.

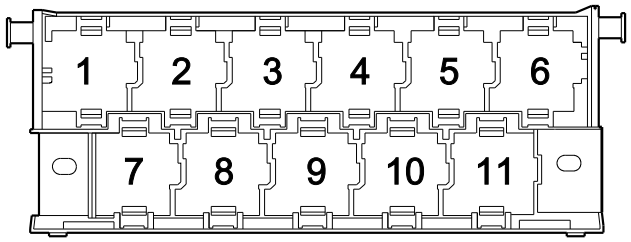

97--25507

Fuse colours

30 A - green
25 A - white
20 A - yellow
15 A - blue
10 A - red
7.5 A - brown
5 A - beige
3 A - purple

Protected by copyright. Copying for private or commercial purposes, in part or in whole, is not permitted unless authorised by Volkswagen AG. Volkswagen AG does not guarantee or accept any liability with respect to the correctness of information in this document. Copyright by Volkswagen AG.

satelettronica

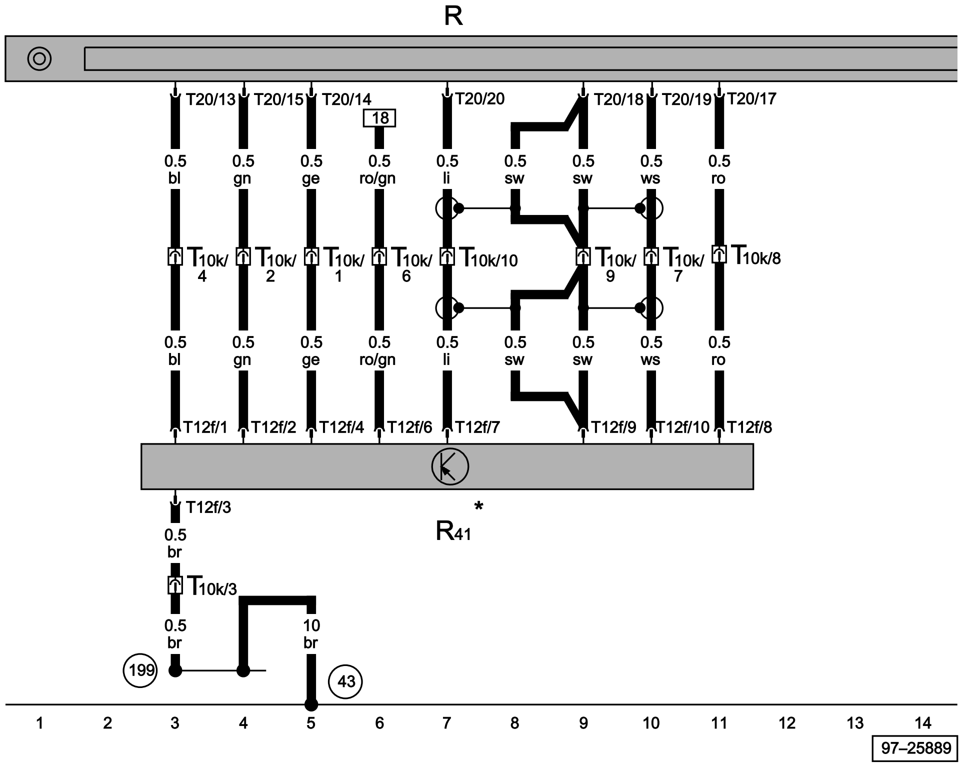

Radio, CD changer

R	Radio
R41	CD changer
T10k	10-pin connector, blue, in protective housing for connectors
T12f	12-pin connector, in luggage compartment
T20	20-pin connector
43	Earth point, lower part of right A-pillar
199	Earth connection -3-, in dash panel wiring harness
*	Does not apply to radio 'alpha'

ws = white
sw = black
ro = red
br = brown
gn = green
bl = blue
gr = grey
li = purple
ge = yellow
or = orange
rs = pink

Protected by copyright. Copying for private or commercial purposes, in part or in whole, is not permitted unless authorised by Volkswagen AG. Volkswagen AG does not guarantee or accept any liability with respect to the correctness of information in this document. Copyright by Volkswagen AG.
satelettronica

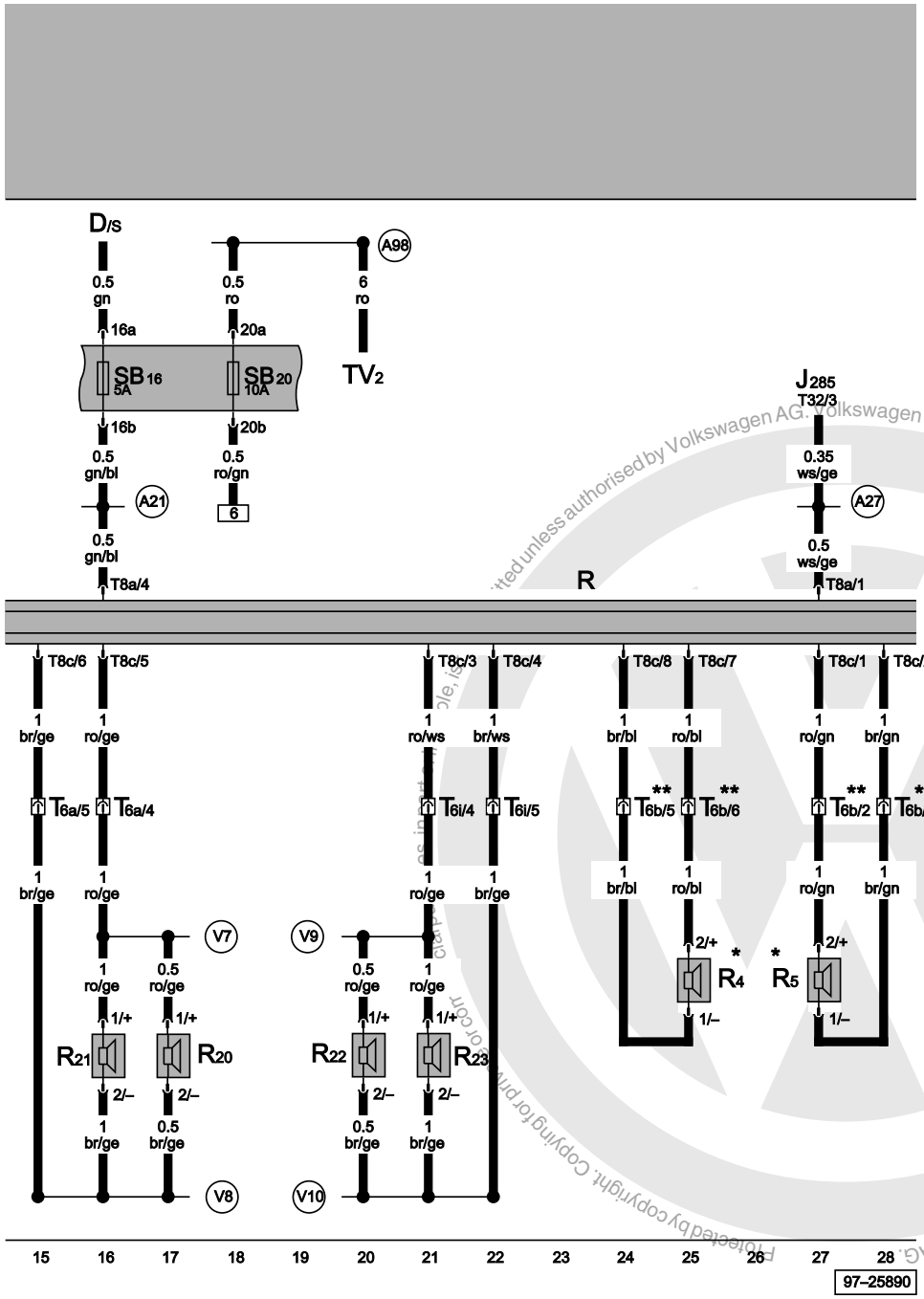

Radio, loudspeaker, rear left, loudspeaker, rear right, treble loudspeaker, front left, bass loudspeaker, front left, treble loudspeaker, front right, bass loudspeaker, front right

D	Ignition/starter switch
J285	Control unit with display in dash panel insert
R	Radio
R4	Loudspeaker, rear left
R5	Loudspeaker, rear right
R20	Treble loudspeaker, front left
R21	Bass loudspeaker, front left
R22	Treble loudspeaker, front right
R23	Bass loudspeaker, front right
SB16	Fuse -16- on fuse box
SB20	Fuse -20- on fuse box
TV2	Terminal 30 junction box
T6a	6-pin connector, A pillar, left
T6b	6-pin connector, grey, in protective housing for connectors
T6i	6-pin connector, A pillar, front passenger's seat, right
T8a	8-pin connector
T8c	8-pin connector
T32	32-pin connector, blue
A21	Connection (86s), in dash panel wiring harness
A27	Connection (vehicle speed signal), in dash panel wiring harness
A98	Positive (+) connection -4- (30), in dash panel wiring harness
V7	Connection (positive, front left loudspeaker), in speaker wiring harness
V8	Connection (negative, front left loudspeaker), in speaker wiring harness
V9	Connection (positive, front right loudspeaker), in speaker wiring harness
V10	Connection (negative, loudspeaker FR), in loudspeaker wiring harness
*	Except radios 'beta' and 'alpha
**	Only models with 4-doors

ws	=	white
sw	=	black
ro	=	red
br	=	brown
gn	=	green
bl	=	blue
gr	=	grey
li	=	purple
ge	=	yellow
or	=	orange
rs	=	pink

Protected by copyright. Copying for private or commercial purposes, in part or whole, is not permitted unless authorised by Volkswagen AG. Volkswagen AG does not guarantee or accept any liability with respect to the correctness of information in this document. Copyright by Volkswagen AG.

satelettronica

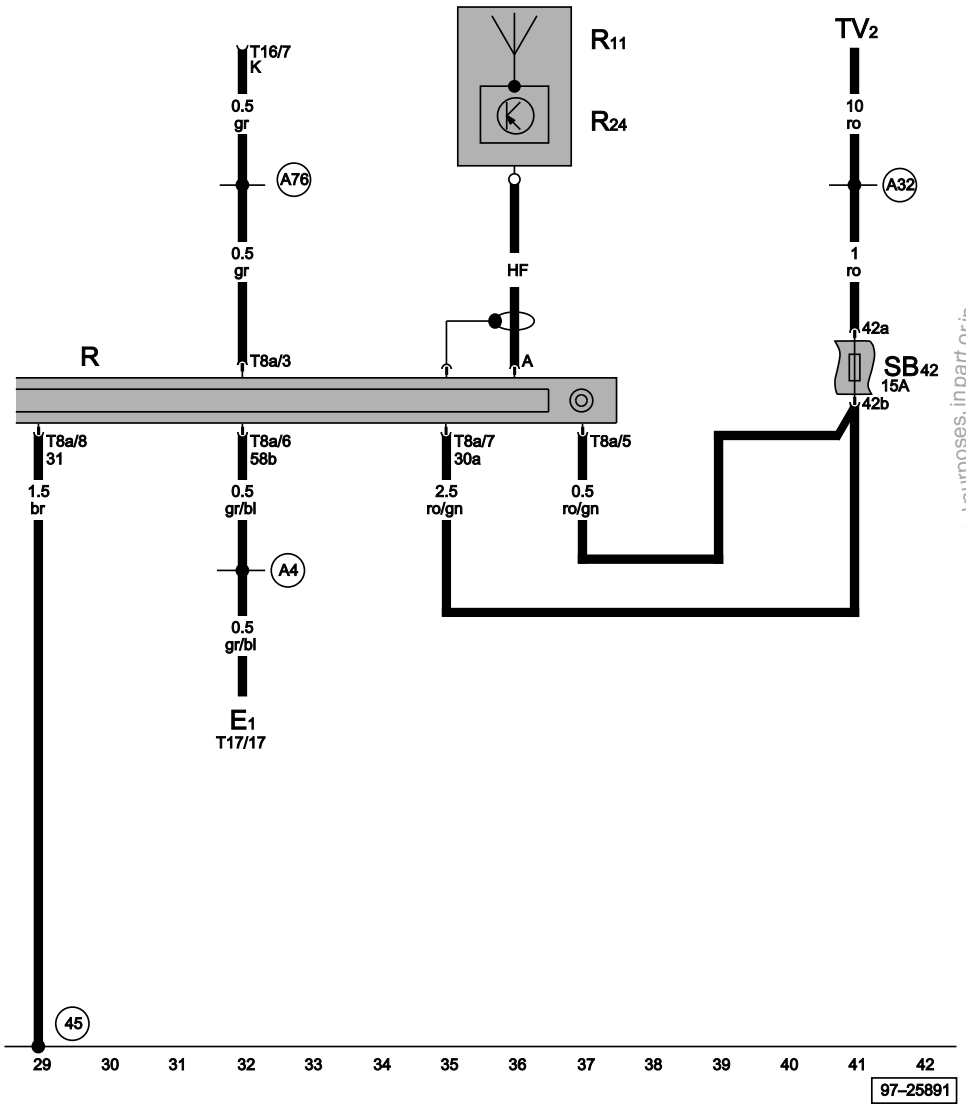

Radio, aerial, aerial amplifier

E1	Lighting switch
R	Radio
R11	Aerial
R24	Aerial amplifier
SB42	Fuse -42- on fuse box
TV2	Terminal 30 junction box
T8a	8-pin connector
T16	16-pin connector, diagnosis
T17	17-pin connector
45	Earth point, behind dash panel - centre
A4	Positive (+) connection (58b), in dash panel wiring harness
A32	Positive (+) connection (30), in dash panel wiring harness
A76	Connection (diagnosis wire K), in dash panel wiring harness

ws	=	white
sw	=	black
ro	=	red
br	=	brown
gn	=	green
bl	=	blue
gr	=	grey
li	=	purple
ge	=	yellow
or	=	orange
rs	=	pink

Protected by copyright. Copying for private or commercial purposes, in part or in whole, is not permitted unless authorised by Volkswagen AG. Volkswagen AG does not guarantee or accept any liability with respect to the correctness of information in this document. Copyright by Volkswagen AG.
satelettronica

Rain sensor, automatic anti-dazzle interior mirror

From October 1999

For alternatives to relay and fuse positions as well as multi-pin connector wiring - see "Fitting locations" section.

Relay locations on the 11 position relay carrier:

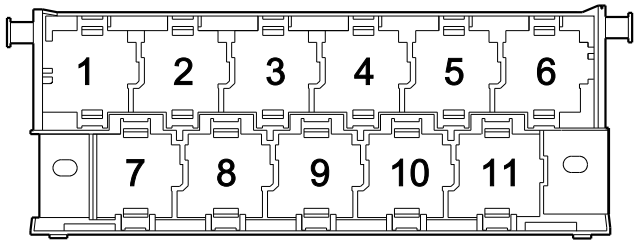

97-22850

5 - X contact relief relay (100)
11 - Automatic intermittent wash/wipe relay

Note:

- *The number in brackets behind the part designation denotes the control number on the housing.*

Fuse colours

30 A - green
25 A - white
20 A - yellow
15 A - blue
10 A - red
7.5 A - brown
5 A - beige
3 A - purple

Protected by copyright. Copying for private or commercial purposes, in part or in whole, is not permitted unless authorised by Volkswagen AG. Volkswagen AG does not guarantee or accept any liability with respect to the correctness of information in this document. Copyright by Volkswagen AG.

satelettronica

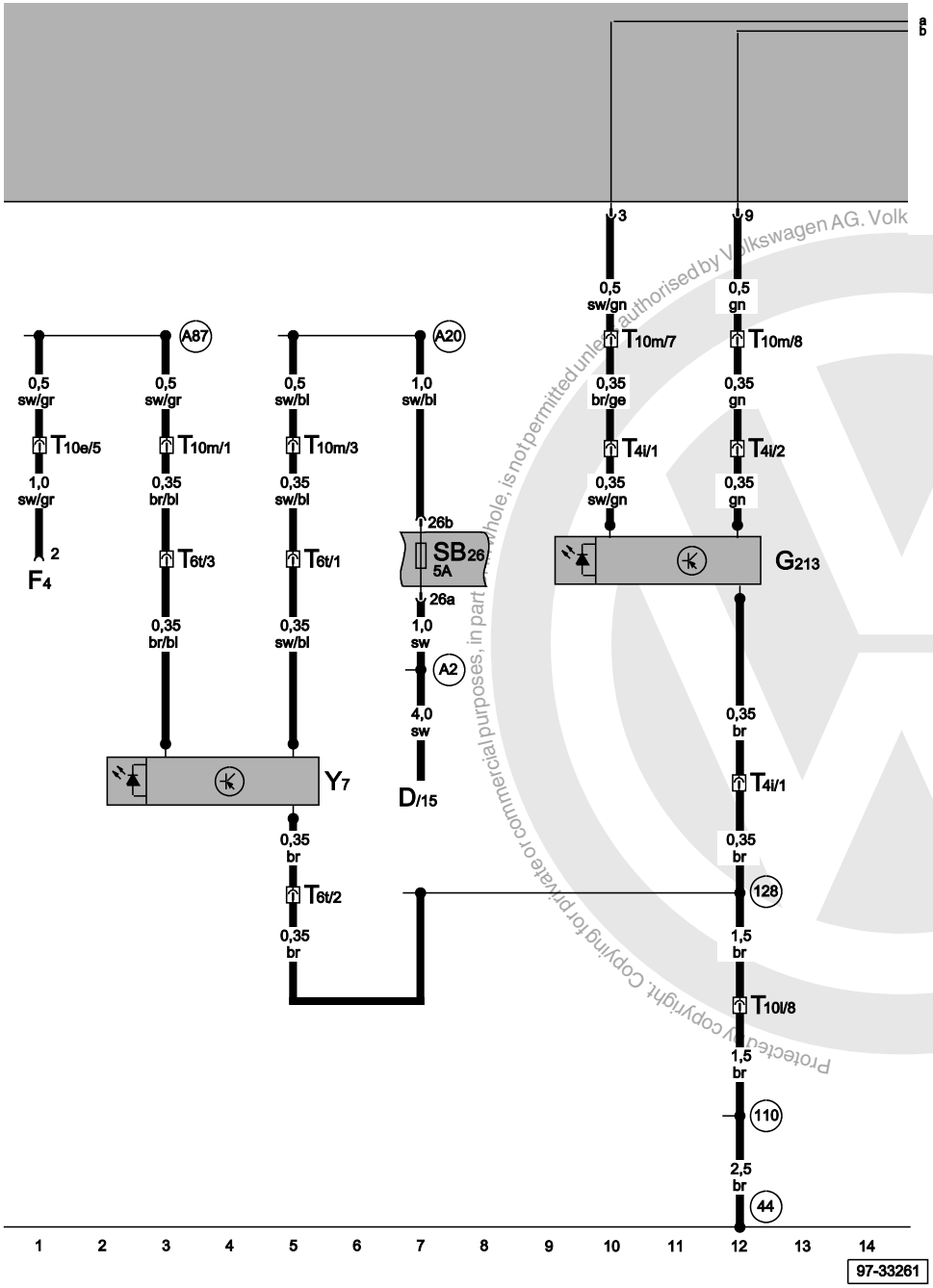

Rain sensor, automatic anti-dazzle interior mirror

D	Ignition/starter switch
F4	Reversing light switch
G213	Rain sensor
SB26	Fuse -26- on fuse box
T4i	4-pin connector, interior mirror
T6t	6-pin connector, interior mirror
T10e	10-pin connector, green, coupling station under relay carrier, left
T10l	10-pin connector, on part of left A-pillar
T10m	10-pin connector, on part of left A-pillar
Y7	Automatic anti-dazzle interior mirror
44	Earth point, lower part of left A-pillar
110	Earth connection -2-, in instruments wiring harness
128	Earth connection -1-, in interior light wiring harness
A2	Positive (+) connection (15), in dash panel wiring harness
A20	Positive (+) connection (15a), in dash panel wiring harness
A87	Connection (reversing light), in dash panel wiring harness

ws	=	white
sw	=	black
ro	=	red
br	=	brown
gn	=	green
bl	=	blue
gr	=	grey
li	=	purple
ge	=	yellow
or	=	orange
rs	=	pink

Protected by copyright. Copyright for private or commercial purposes, in part or whole, is not permitted unless authorised by Volkswagen AG. Volkswagen AG does not guarantee or accept any liability with respect to the correctness of information in this document. Copyright by Volkswagen AG.
satelettronica

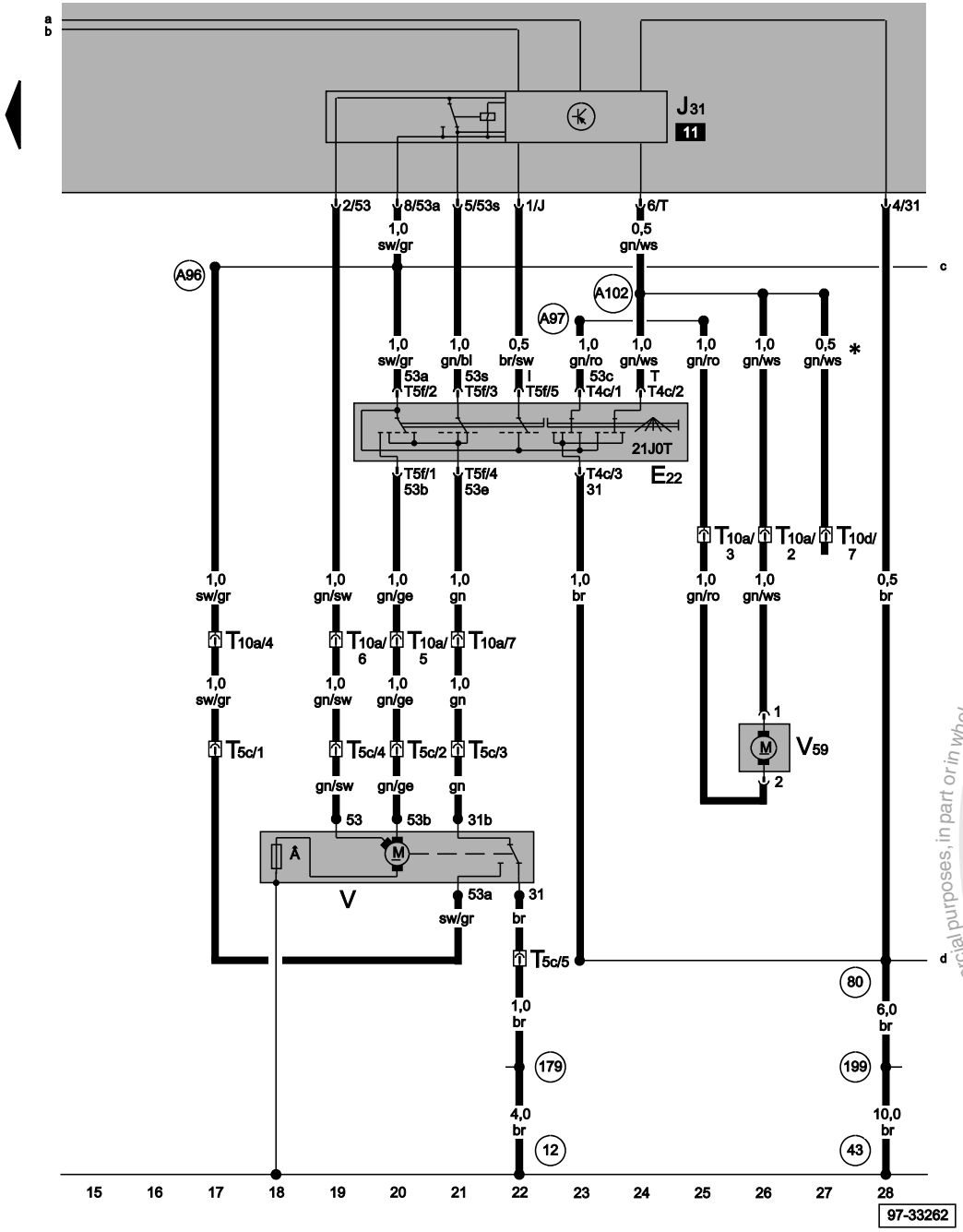

Intermittent wiper switch, windscreen wiper motor, windscreen and rear window washer pump

E22	Intermittent wiper switch
J31	Automatic intermittent wash/wipe relay
T4c	4-pin connector
T5c	5-pin connector, on windscreen wiper motor
T5f	5-pin connector
T10a	10-pin connector, black, coupling station under relay carrier, left
T10d	10-pin connector, pink, coupling station under relay carrier, left
V	Windscreen wiper motor
V59	Windscreen and rear window washer pump
12	Earth point, left in engine compartment
43	Earth point, lower part of right A-pillar
80	Earth connection -1-, in dash panel wiring harness
179	Earth connection, in left headlight wiring harness
199	Earth connection -3-, in dash panel wiring harness
A96	Connection (53a), in dash panel wiring harness
A97	Connection (53), in dash panel wiring harness
A102	Connection (windscreen wiper), in dash panel wiring harness
*	Only models with headlight washer system

ws	=	white
sw	=	black
ro	=	red
br	=	brown
gn	=	green
bl	=	blue
gr	=	grey
li	=	purple
ge	=	yellow
or	=	orange
rs	=	pink

Protected by copyright. Copying for private or commercial purposes, in part or in whole, is not permitted unless authorised by Volkswagen AG. Volkswagen AG does not guarantee or accept any liability with respect to the correctness of information in this document. Copyright by Volkswagen AG.
satelettronica

Heated rear window switch, heated rear window warning lamp, heated rear window switch bulb, heated rear window

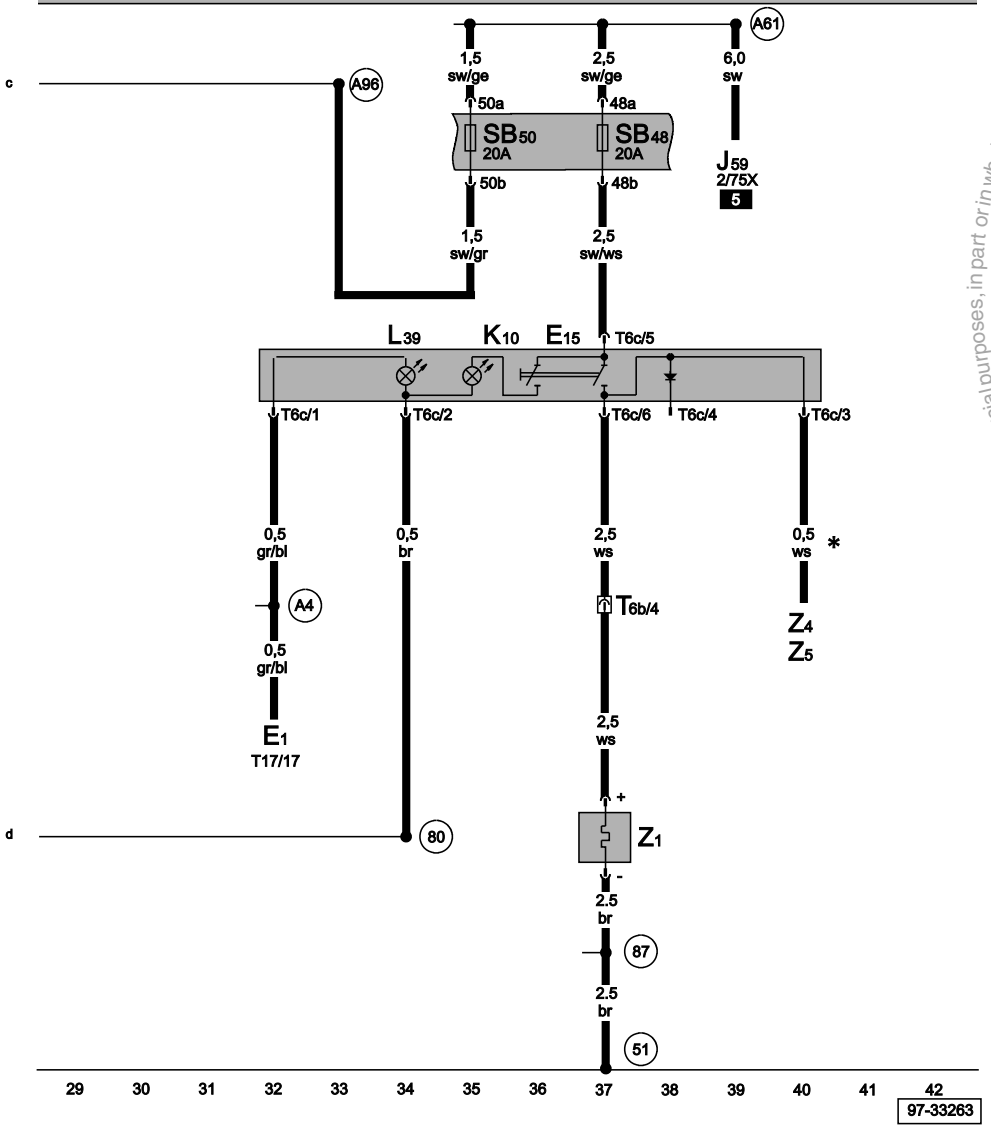

E1	Light switch
E15	Heated rear window switch
J59	X contact relief relay
K10	Heated rear window warning lamp
L39	Heated rear window switch bulb
SB48	Fuse -48- on fuse box
SB50	Fuse -50- on fuse box
T6b	6-pin connector, grey, coupling station under relay carrier, left
T6c	6-pin connector
T17	17-pin connector
Z1	Heated rear window
Z4	Heated exterior mirror, driver's side
Z5	Heated exterior mirror, front passenger's side
51	Earth point, right luggage compartment
80	Earth connection -1-, in dash panel wiring harness
87	Earth connection -2-, in rear wiring harness
A4	Positive (+) connection (58b), in dash panel wiring harness
A61	Positive (+) connection (X), in dash panel wiring harness
A96	Connection (53a), in dash panel wiring harness
*	Only heated exterior mirror

ws	=	white
sw	=	black
ro	=	red
br	=	brown
gn	=	green
bl	=	blue
gr	=	grey
li	=	purple
ge	=	yellow
or	=	orange
rs	=	pink

Protected by copyright. Copying for private or commercial purposes, in part or in whole, is not permitted unless authorised by Volkswagen AG. Volkswagen AG does not guarantee or accept any liability with respect to the correctness of information in this document. Copyright by Volkswagen AG.
satelettronica

Heated front seats

From October 1999

For alternatives to relay and fuse positions as well as multi-pin connector wiring - see "Fitting locations" section.

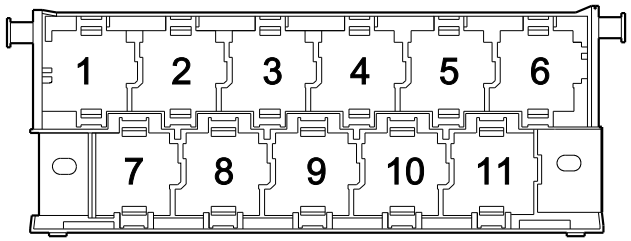

97--25507

Fuse colours

30 A - green
25 A - white
20 A - yellow
15 A - blue
10 A - red
7.5 A - brown
5 A - beige
3 A - purple

Protected by copyright. Copying for private or commercial purposes, in part or in whole, is not permitted unless authorised by Volkswagen AG. Volkswagen AG does not guarantee or accept any liability with respect to the correctness of information in this document. Copyright by Volkswagen AG.

satelettronica

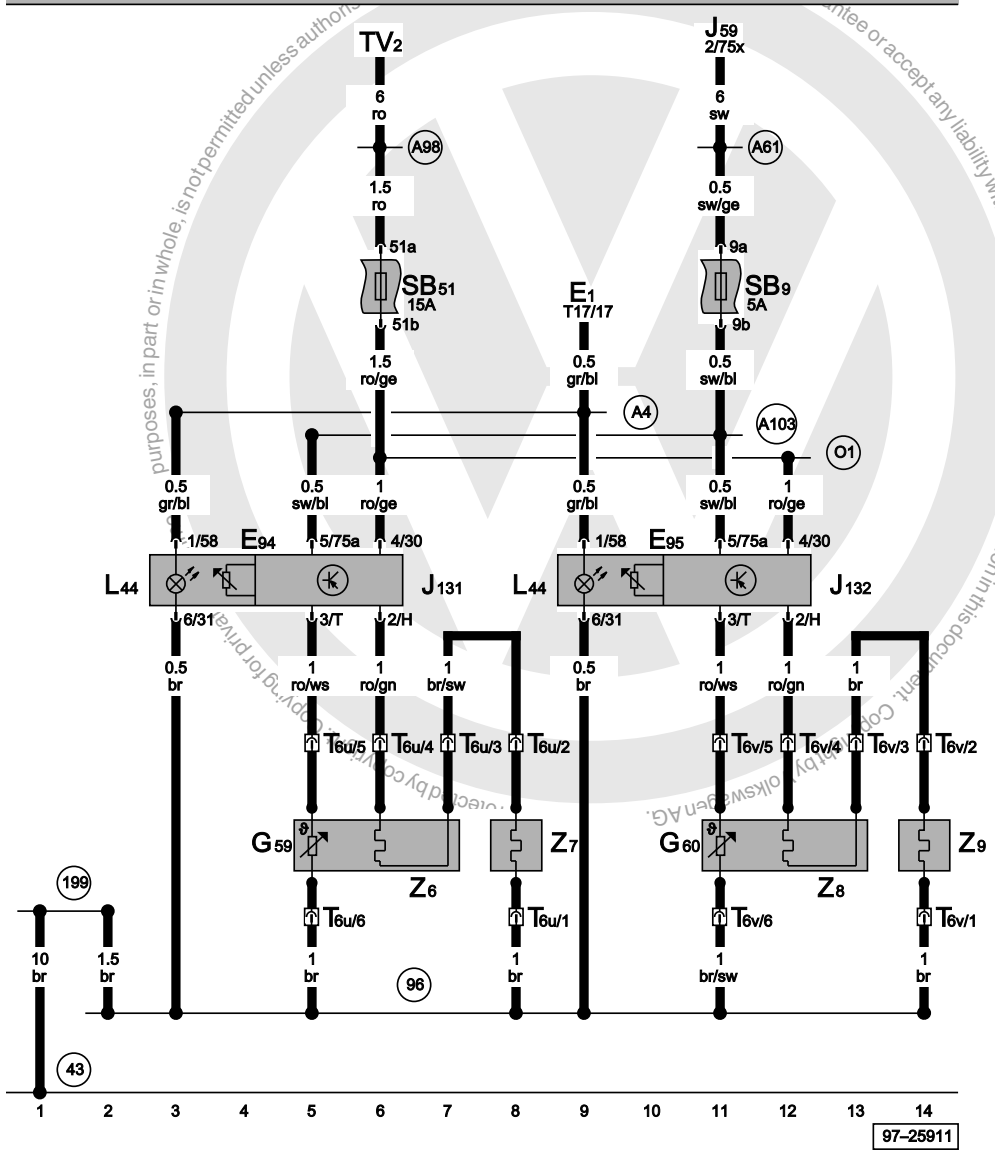

Heated driver seat, heated front passenger's seat

E1	Lighting switch
E94	Heated driver's seat adjuster
E95	Heated front passenger's seat adjuster
G59	Driver's seat temperature sensor
G60	Front passenger's seat temperature sensor
J59	X contact relief relay
J131	Heated driver's seat control unit
J132	Heated front passenger's seat control unit
L44	Seat heating switch light bulb
SB9	Fuse -9- on fuse box
SB51	Fuse -51- on fuse box
Z6	Heated driver's seat
Z7	Heated driver's seat backrest
Z8	Heated front passenger's seat
Z9	Heated front passenger's seat backrest
T6u	6-pin connector, in driver's seat
T6v	6-pin connector, in front passenger's seat
T17	17-pin connector
TV2	Terminal 30 junction box
43	Earth point, lower part of right A-pillar
96	Earth connection -1-, in seat heating wiring harness
199	Earth connection -3-, in dash panel wiring harness
A4	Positive (+) connection (58b), in dash panel wiring harness
A61	Positive (+) connection (X), in instruments wiring harness
A98	Positive (+) connection -4- (30), in dash panel wiring harness
A103	Connection -2- (56), in dash panel wiring harness
O1	Positive (+) connection (30), in heated seats wiring harness

ws	=	white
sw	=	black
ro	=	red
br	=	brown
gn	=	green
bl	=	blue
gr	=	grey
li	=	purple
ge	=	yellow
or	=	orange
rs	=	pink

satelettronica

Socket (12V)

From October 1999

For alternatives to relay and fuse positions as well as multi-pin connector wiring - see "Fitting locations" section.

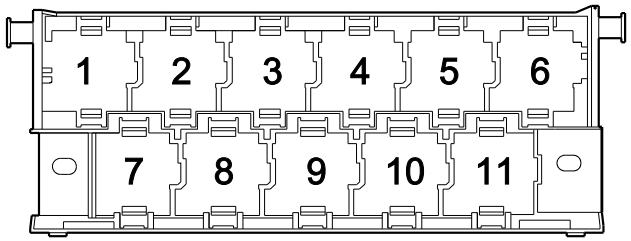

97--25507

Fuse colours

30 A - green
25 A - white
20 A - yellow
15 A - blue
10 A - red
7.5 A - brown
5 A - beige
3 A - purple

Protected by copyright. Copying for private or commercial purposes, in part or in whole, is not permitted unless authorised by Volkswagen AG. Volkswagen AG does not guarantee or accept any liability with respect to the correctness of information in this document. Copyright by Volkswagen AG.
satelettronica

Protected by copyright. Copying for private or commercial purposes, in part or in whole, is not permitted unless authorised by Volkswagen AG. Volkswagen AG does not guarantee or accept any liability with respect to the correctness of information in this document. Copyright by Volkswagen AG.

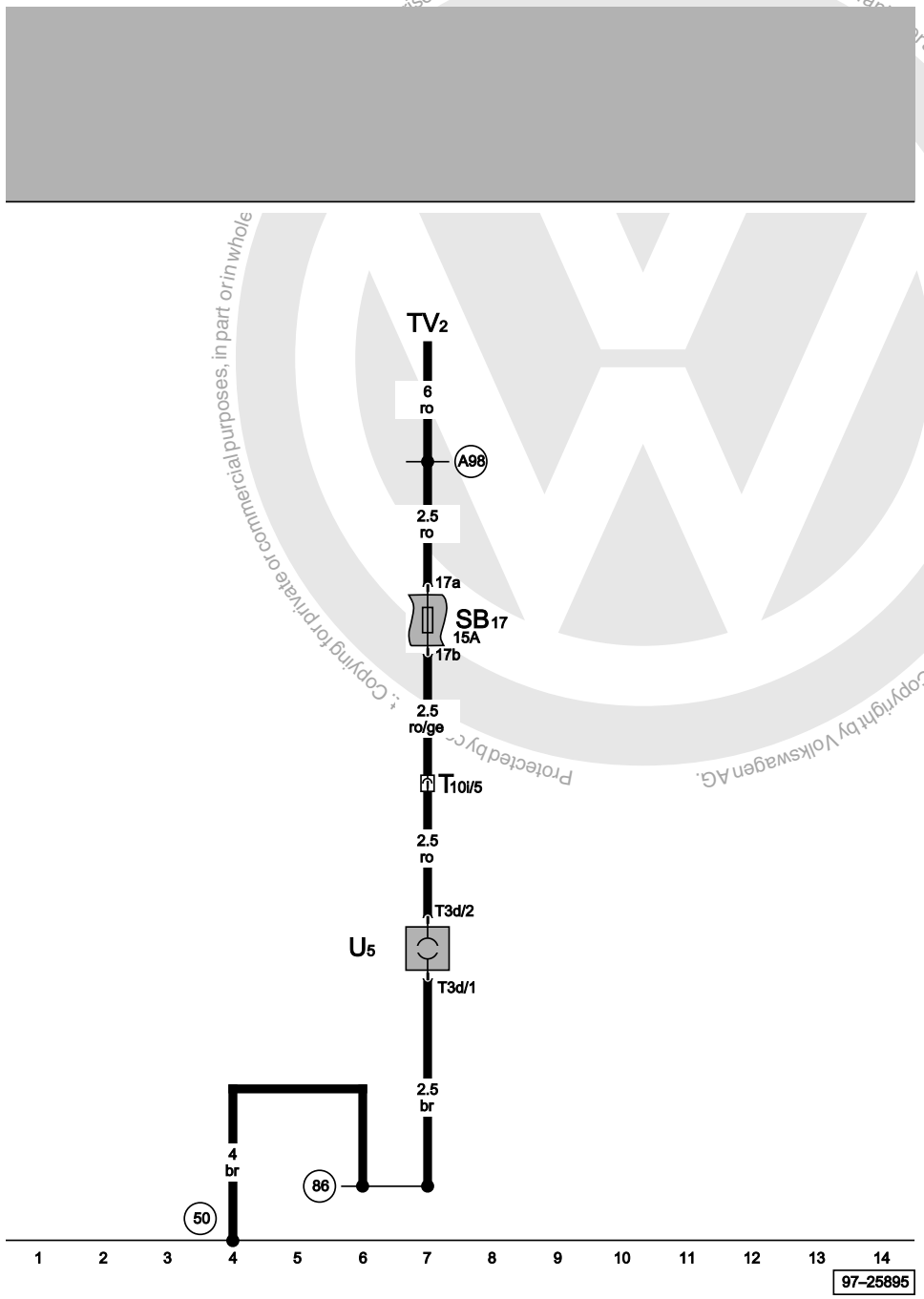

12 V socket

SB17	Fuse -17- on fuse box
TV2	Terminal 30 junction box
T3d	3-pin connector, in luggage compartment
T10i	10-pin connector, orange, in protective housing for connectors
U5	12 V socket
50	Earth point, in left luggage compartment
86	Earth connection -1-, in rear wiring harness
A98	Positive (+) connection -4- (30), in dash panel wiring harness

ws	=	white
sw	=	black
ro	=	red
br	=	brown
gn	=	green
bl	=	blue
gr	=	grey
li	=	purple
ge	=	yellow
or	=	orange
rs	=	pink

satelettronica

Heated washer jets

From October 1999

For alternatives to relay and fuse positions as well as multi-pin connector wiring - see "Fitting locations" section.

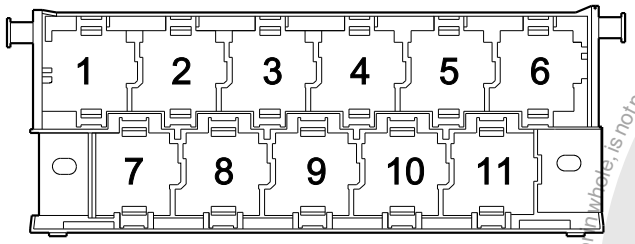

97--25507

Fuse colours

30 A - green
25 A - white
20 A - yellow
15 A - blue
10 A - red
7.5 A - brown
5 A - beige
3 A - purple

Protected by copyright. Copying for private or commercial purposes, in part or in whole, is not permitted unless authorised by Volkswagen AG. Volkswagen AG does not guarantee or accept any liability with respect to the correctness of information in this document. Copyright by Volkswagen AG.

satelettronica

Heater element, left washer jet, heater element, right washer jet

D	Ignition/starter switch
SB29	Fuse -29- in fuse box
T10d	10-pin connector, pink, in protective housing for connectors
Z20	Heater element, left washer jet
Z21	Heater element, right washer jet
18	Earth point, on engine block
114	Earth connection, in automatic gearbox wiring harness
A2	Positive (+) connection (15), in dash panel wiring harness
A38	Positive (+) connection -2- (15a), in dash panel wiring harness

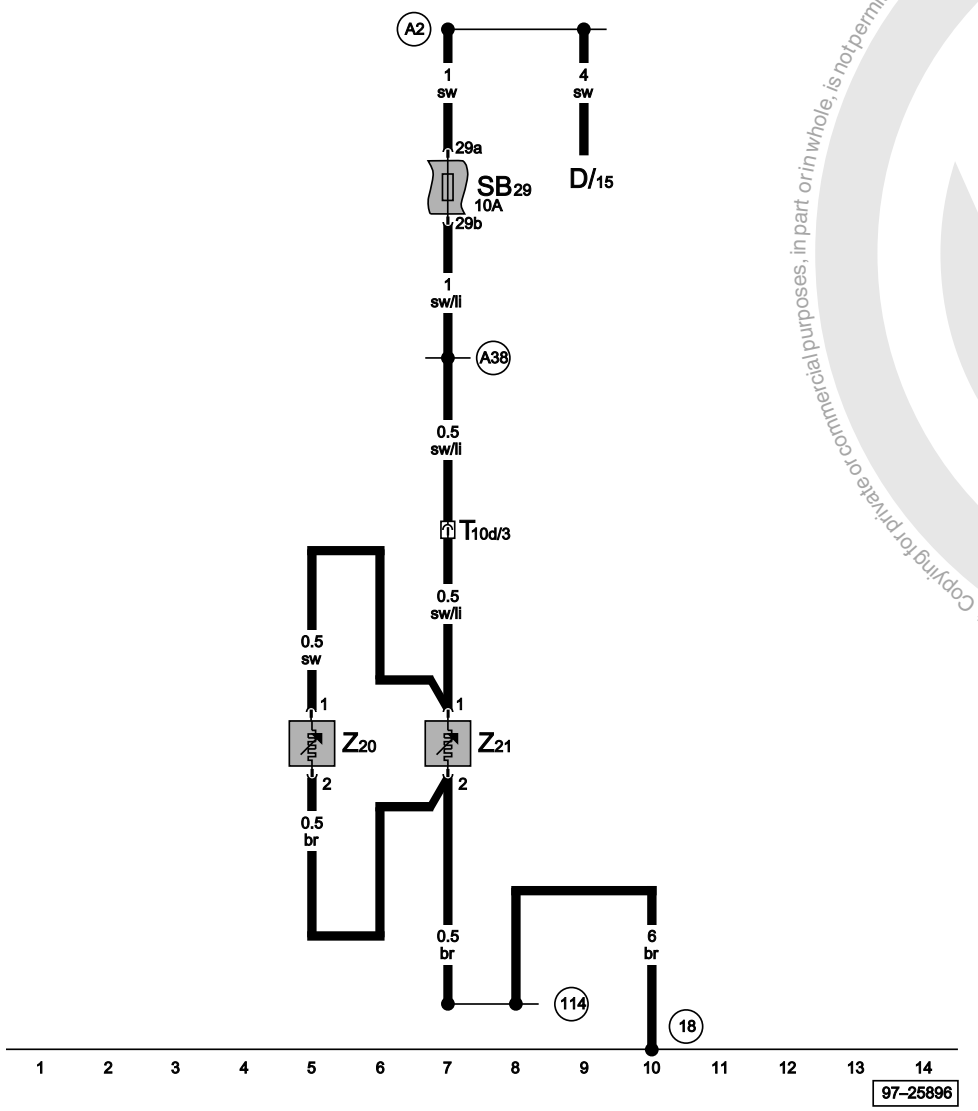

ws	=	white
sw	=	black
ro	=	red
br	=	brown
gn	=	green
bl	=	blue
gr	=	grey
li	=	purple
ge	=	yellow
or	=	orange
rs	=	pink

Protected by copyright. Copying for private or commercial purposes, in part or in whole, is not permitted. Copyright by Volkswagen AG. Volkswagen AG does not accept any liability with respect to the correctness of information in this document. Copyright by Volkswagen AG.
satelettronica

Headlight washer system

From October 1999

For alternatives to relay and fuse positions as well as multi-pin connector wiring - see "Fitting locations" section.

Relay locations on relay plate:

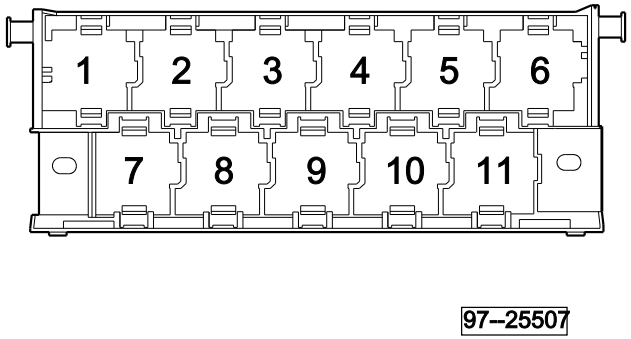

10 - Dual tone horn relay (53)

Note:

- *The number in brackets behind the part designation denotes the control number on the housing.*

Fuse colours

30 A - green
25 A - white
20 A - yellow
15 A - blue
10 A - red
7.5 A - brown
5 A - beige
3 A - purple

Protected by copyright. Copying for private or commercial purposes, in part or in whole, is not permitted unless authorised by Volkswagen AG. Volkswagen AG does not guarantee or accept any liability with respect to the correctness of information in this document. Copyright by Volkswagen AG.

satelettronica

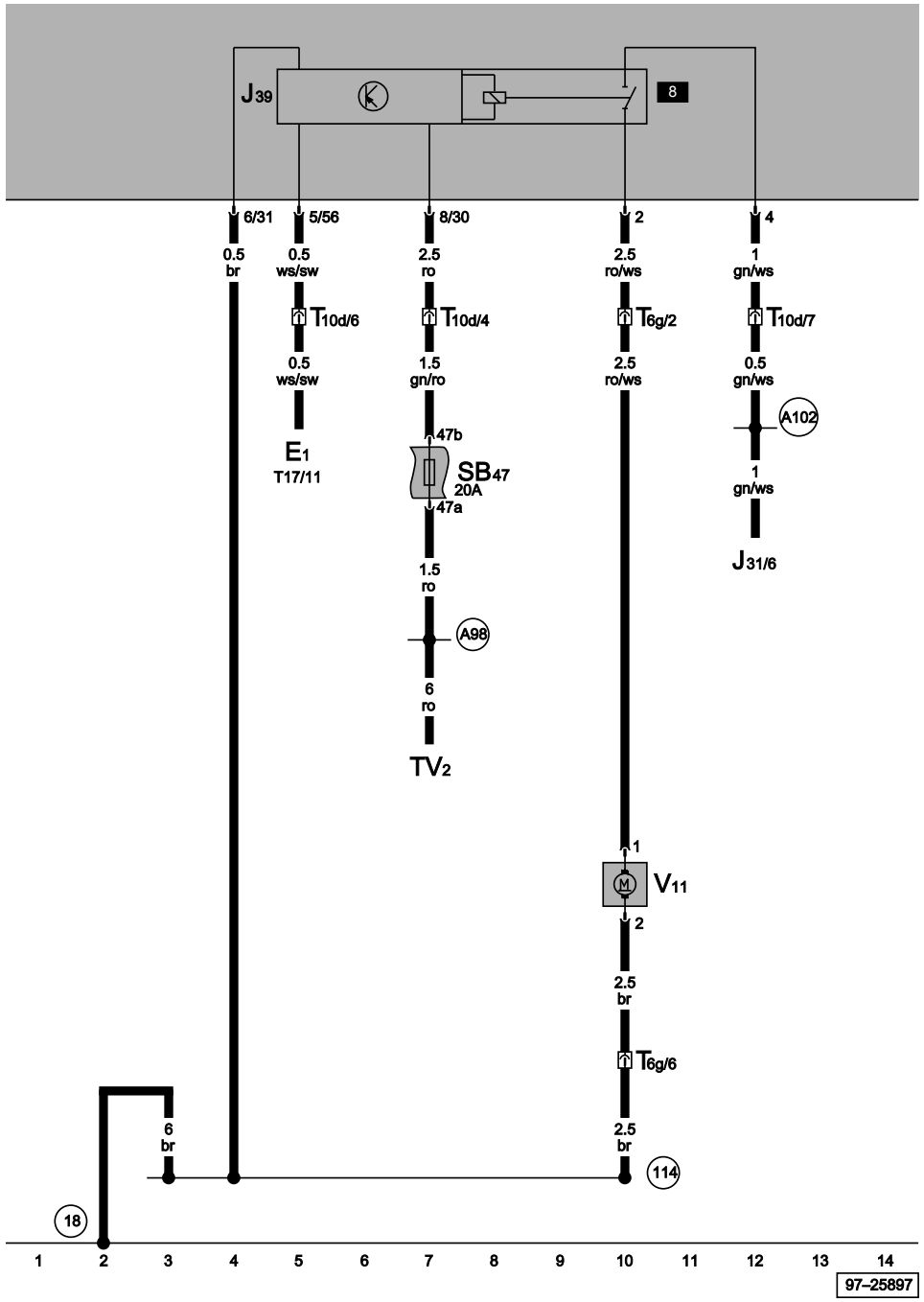

Headlight washer system relay, headlight washer system pump

E1	Lighting switch
J31	Automatic intermittent wash/wipe relay
J39	Headlight washer system relay
SB47	Fuse -47- on fuse box
TV2	Terminal 30 junction box
T6g	6-pin connector, black, in protective housing for connectors
T10d	10-pin connector, pink, in protective housing for connectors
T17	17-pin connector
V11	Headlight washer system pump
18	Earth point, on engine block
114	Earth connection, in automatic gearbox wiring harness
A98	Positive (+) connection -4- (30), in dash panel wiring harness
A102	Connection (windscreen wiper), in dash panel wiring harness

ws	=	white
sw	=	black
ro	=	red
br	=	brown
gn	=	green
bl	=	blue
gr	=	grey
li	=	purple
ge	=	yellow
or	=	orange
rs	=	pink

Protected by copyright. Copying for private or commercial purposes, in part or in whole, is not permitted unless authorised by Volkswagen AG. Volkswagen AG does not guarantee or accept any liability with respect to the correctness of information in this document. Copyright by Volkswagen AG.
satelettronica

Front and rear fog lights

From October 1999

For alternatives to relay and fuse positions as well as multi-pin connector wiring - see "Fitting locations" section.

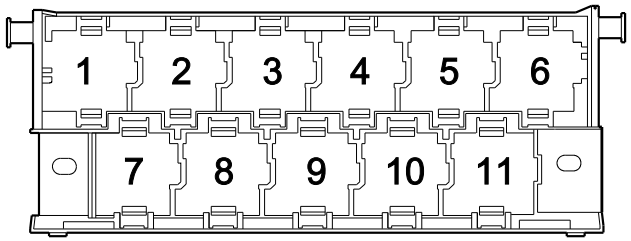

97--25507

Fuse colours

30 A - green
25 A - white
20 A - yellow
15 A - blue
10 A - red
7.5 A - brown
5 A - beige
3 A - purple

Protected by copyright. Copying for private or commercial purposes, in part or in whole, is not permitted unless authorised by Volkswagen AG. Volkswagen AG does not guarantee or accept any liability with respect to the correctness of information in this document. Copyright by Volkswagen AG.

satelettronica

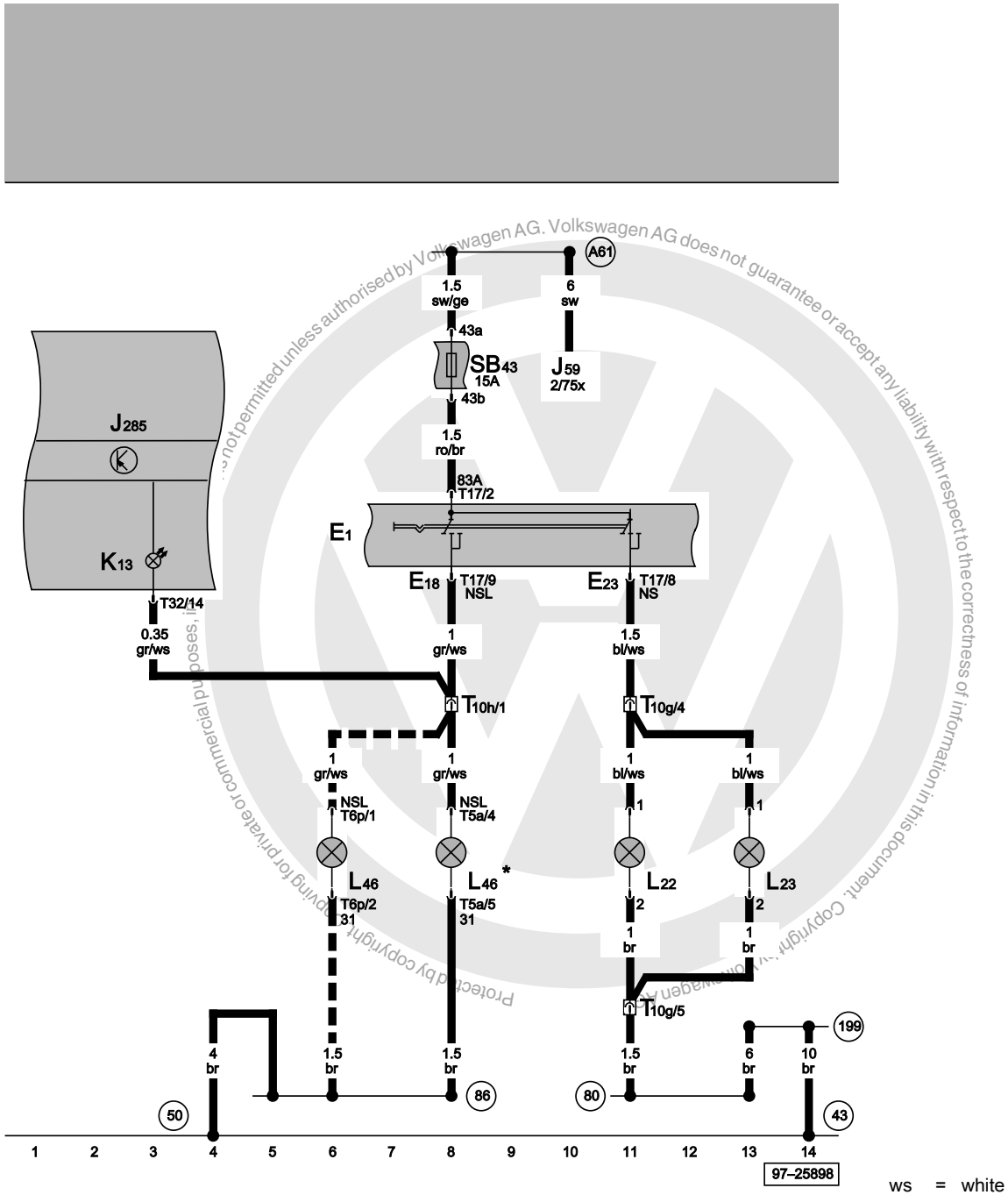

ws = white

Fog light bulb left, fog light bulb right

E1	Lighting switch
E18	Rear fog light switch
E23	Front and rear fog light switch
J59	X contact relief relay
J285	Control unit with display in dash panel insert
K13	Rear fog light warning lamp
L22	Fog light bulb, left
L23	Fog light bulb, right
L46	Rear fog light bulb, left
SB43	Fuse -43- on fuse box
T5a	5-pin connector
T6p	6-pin connector
T10g	10-pin connector, red, in protective housing for connectors
T10h	10-pin connector, green, in protective housing for connectors
T17	17-pin connector
T32	32-pin connector, blue
43	Earth point, lower part of right A-pillar
50	Earth point, in left luggage compartment
80	Earth connection -1-, in instruments wiring harness
86	Earth connection -1-, in rear wiring harness
199	Earth connection -3-, in dash panel wiring harness
A61	Positive (+) connection (X), in instruments wiring harness
*	Only models Polo Classic
<fo:external-graphic src="/../PDOC/samba/tools/png-convert/out//slp/ft_icons/m_m_m.png" content-width="20pt" scaling="	Only models Polo Variant

satelettronica

sw	=	black	uniform"/
ro	=	red	>
br	=	brown	
gn	=	green	
bl	=	blue	
gr	=	grey	
li	=	purple	
ge	=	yellow	
or	=	orange	
rs	=	pink	

Protected by copyright. Copying for private or commercial purposes, in part or in whole, is not permitted unless authorised by Volkswagen AG. Volkswagen AG does not guarantee or accept any liability with respect to the correctness of information in this document. Copyright by Volkswagen AG.

satelettronica

Daytime driving lights

From October 1999

For alternatives to relay and fuse positions as well as multi-pin connector wiring - see "Fitting locations" section.

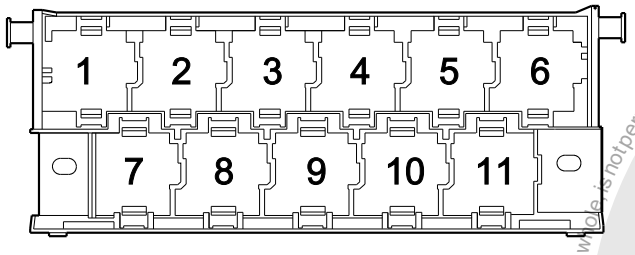

97--25507

Fuse colours

30 A - green
25 A - white
20 A - yellow
15 A - blue
10 A - red
7.5 A - brown
5 A - beige
3 A - purple

Protected by copyright. Copying for private or commercial purposes, in part or in whole, is not permitted unless authorised by Volkswagen AG. Volkswagen AG does not guarantee or accept any liability with respect to the correctness of information in this document. Copyright by Volkswagen AG.

satelettronica

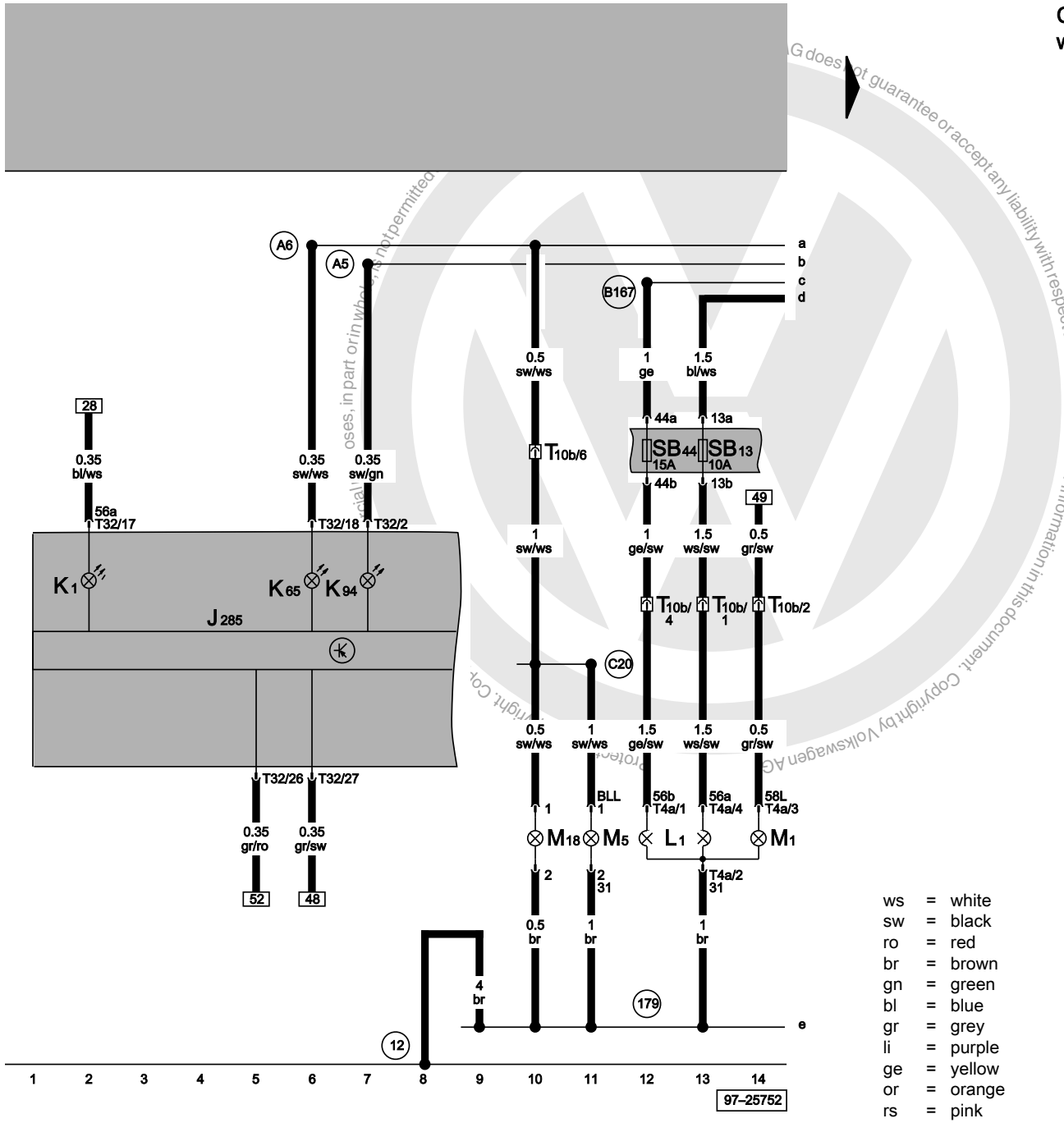

Control unit with display in dash panel insert, main beam warning lamp, twin filament bulb for headlight left

J285	Control unit with display in dash panel insert
K1	Main beam warning lamp
K65	Left turn signal warning lamp
K94	Right turn signal warning lamp
L1	Twin filament bulb for headlight, left
M1	Side light bulb, left
M5	Turn signal bulb, front left
M18	Side turn signal bulb, left
SB13	Fuse -13- on fuse box
SB44	Fuse -44- on fuse box
T4a	4-pin connector, in headlight, left
T10b	10-pin connector, white, in protective housing for connectors
T32	32-pin connector, blue
12	Earth point, in engine compartment, left
179	Earth connection, in left headlight wiring harness
A5	Positive (+) connection (right turn signal), in dash panel wiring harness
A6	Positive (+) connection (left turn signal), in dash panel wiring harness
B167	Connection (56b), in interior wiring harness
C20	Connection (turn signal, left), in headlight wiring harness

ws	=	white
sw	=	black
ro	=	red
br	=	brown
gn	=	green
bl	=	blue
gr	=	grey
li	=	purple
ge	=	yellow
or	=	orange
rs	=	pink

satelettronica

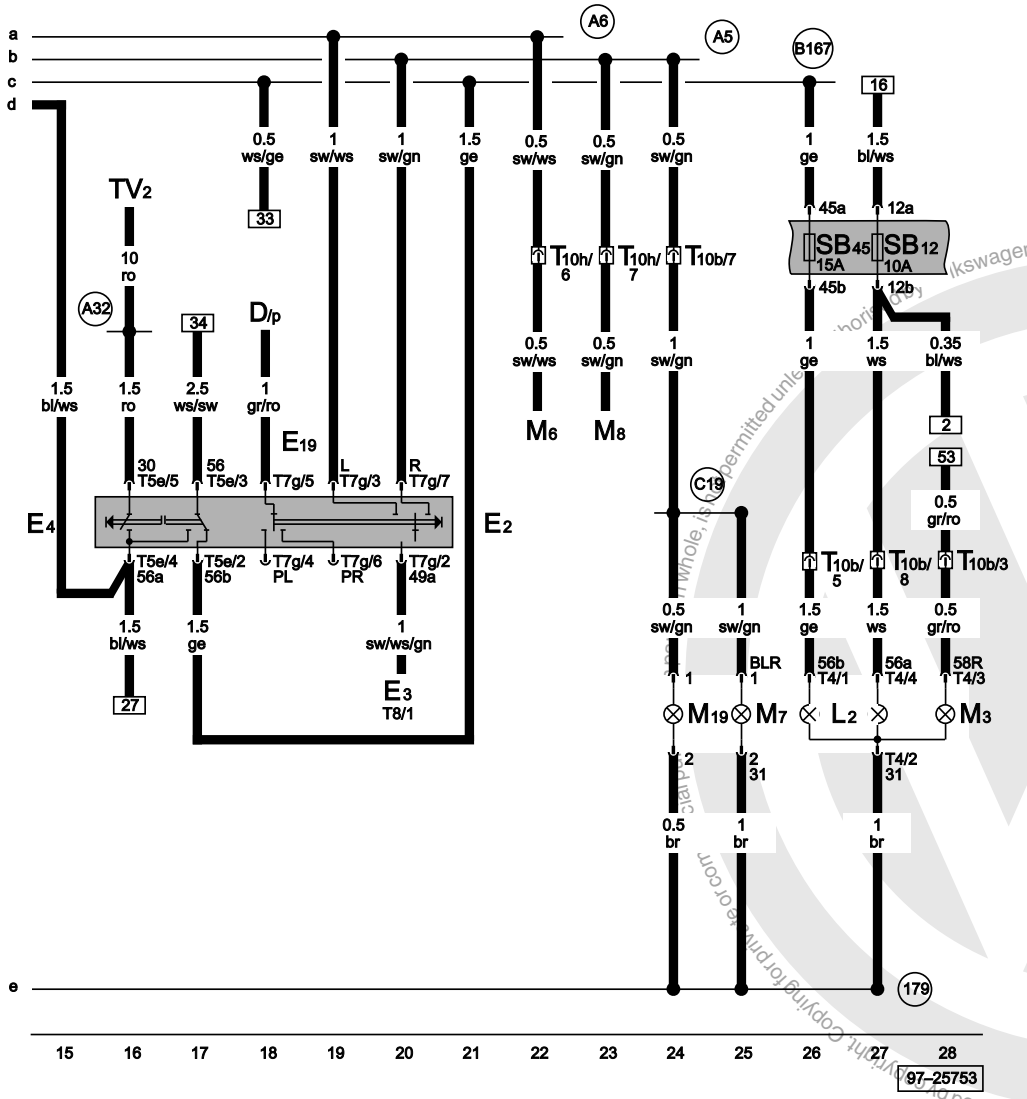

Turn signal switch, headlight dipper/flasher switch, twin filament bulb for headlight right

D	Ignition/starter switch
E2	Turn signal switch
E3	Hazard warning light switch
E4	Headlight dipper/flasher switch
E19	Parking light switch
L2	Twin filament bulb for headlight, right
M3	Side light bulb, right
M6	Turn signal bulb, rear left
M7	Turn signal bulb, front right
M8	Turn signal bulb, rear right
M19	Side turn signal bulb, right
SB12	Fuse -12- on fuse box
SB45	Fuse -45- on fuse box
T4	4-pin connector, in headlight, right
T5e	5-pin connector
T7g	7-pin connector
T8	8-pin connector
T10b	10-pin connector, white, in protective housing for connectors
T10h	10-pin connector, green, in protective housing for connectors
TV2	Terminal 30 junction box
179	Earth connection, in left headlight wiring harness
A5	Positive (+) connection (right turn signal), in dash panel wiring harness
A6	Positive (+) connection (left turn signal), in dash panel wiring harness
A32	Positive (+) connection (30), in dash panel wiring harness
B167	Connection (56b), in interior wiring harness
C19	Connection -1- (turn signal, right), in headlight wiring harness

ws	=	white
sw	=	black
ro	=	red
br	=	brown
gn	=	green
bl	=	blue
gr	=	grey
li = purple
ge	=	yellow
or	=	orange
rs	=	pink

satelettronica

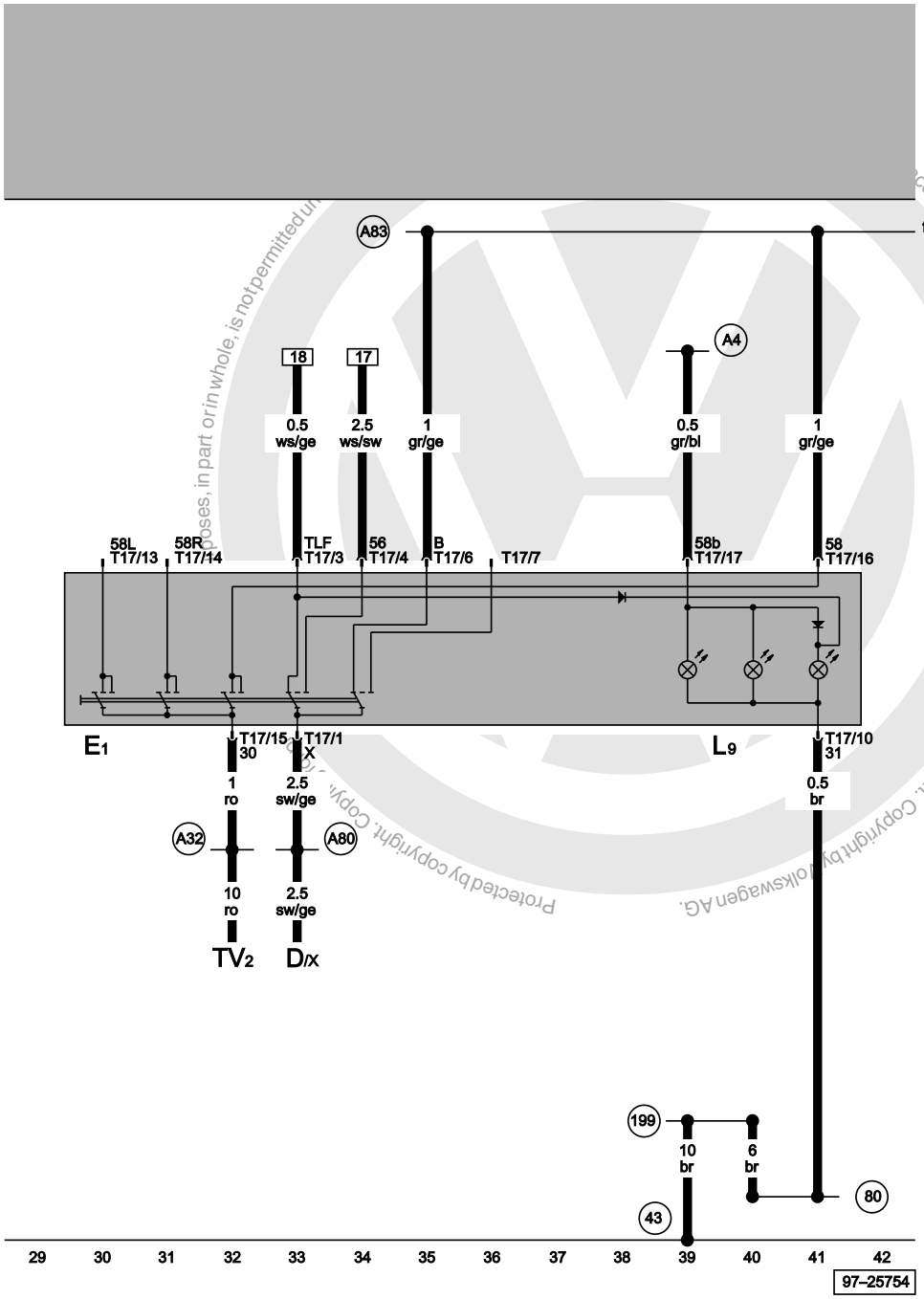

Lighting switch, rear fog lights, lighting switch light bulb

D	Ignition/starter switch
E1	Lighting switch
L9	Lighting switch light bulb
TV2	Terminal 30 junction box
T17	17-pin connector
43	Earth point, lower part of right A-pillar
80	Earth connection -1-, in instruments wiring harness
199	Earth connection -3-, in dash panel wiring harness
A4	Positive (+) connection (58b), in dash panel wiring harness
A32	Positive (+) connection (30), in dash panel wiring harness
A80	Connection -1- (X), in dash panel wiring harness
A83	Connection (daytime driving lights), in dash panel wiring harness

ws	=	white
sw	=	black
ro	=	red
br	=	brown
gn	=	green
bl	=	blue
gr	=	grey
li	=	purple
ge	=	yellow
or	=	orange
rs	=	pink

Protected by copyright. Copyright by Volkswagen AG.
accept any liability with respect to the correctness of information in this document.
in whole, is not permitted unless authorised by Volkswagen AG. Volkswagen AG does not
poses, in part or
satelettronica

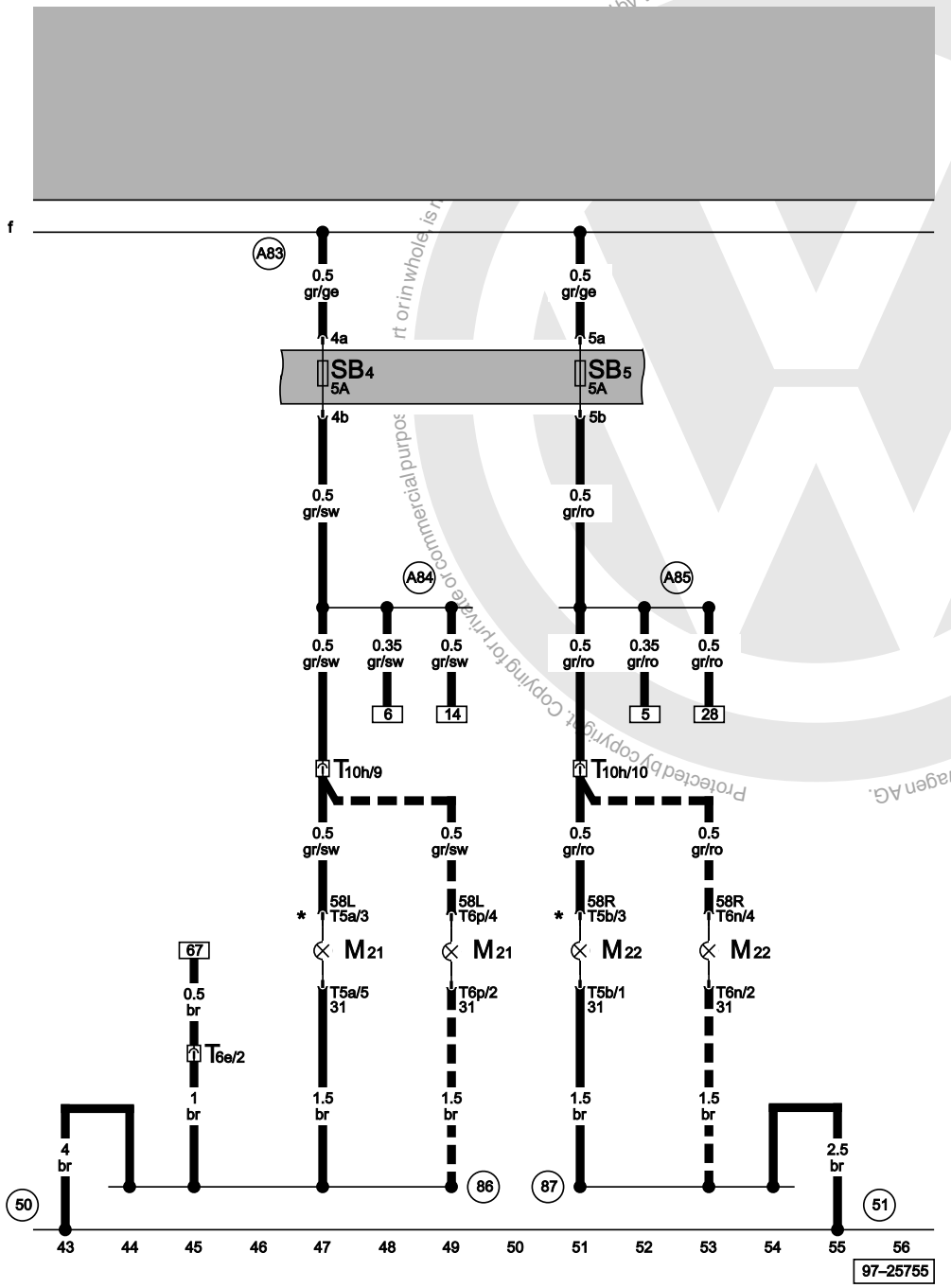

ws = white

Brake and tail light bulb left, brake and tail light bulb right

M21	Brake and tail light bulb, left
M22	Brake and tail light bulb, right
SB4	Fuse -4- on fuse box
SB5	Fuse -5- on fuse box
T5a	5-pin connector
T5b	5-pin connector
T6e	6-pin connector, on left C-pillar
T6n	6-pin connector
T6p	6-pin connector
T10h	10-pin connector, green, in protective housing for connectors
50	Earth point, in left luggage compartment
51	Earth point, in right luggage compartment
86	Earth connection -1-, in rear wiring harness
87	Earth connection -2-, in rear wiring harness
A83	Connection (daytime driving lights), in dash panel wiring harness
A84	Connection (58L), in dash panel wiring harness
A85	Connection (58R), in dash panel wiring harness
*	Only models Polo Classic
<fo:external-graphic src="/../PDOC/samba/tools/png-convert/out//slp/ft_icons/m_m_m2.png" content-width="20pt" scaling="	Only models Polo Variant

satelettronica

sw	=	black	uniform"/
ro	=	red	>
br	=	brown	
gn	=	green	
bl	=	blue	
gr	=	grey	
li	=	purple	
ge	=	yellow	
or	=	orange	
rs	=	pink	

Protected by copyright. Copying for private or commercial purposes, in part or in whole, is not permitted unless authorised by Volkswagen AG. Volkswagen AG does not guarantee or accept any liability with respect to the correctness of information in this document. Copyright by Volkswagen AG.

satelettronica

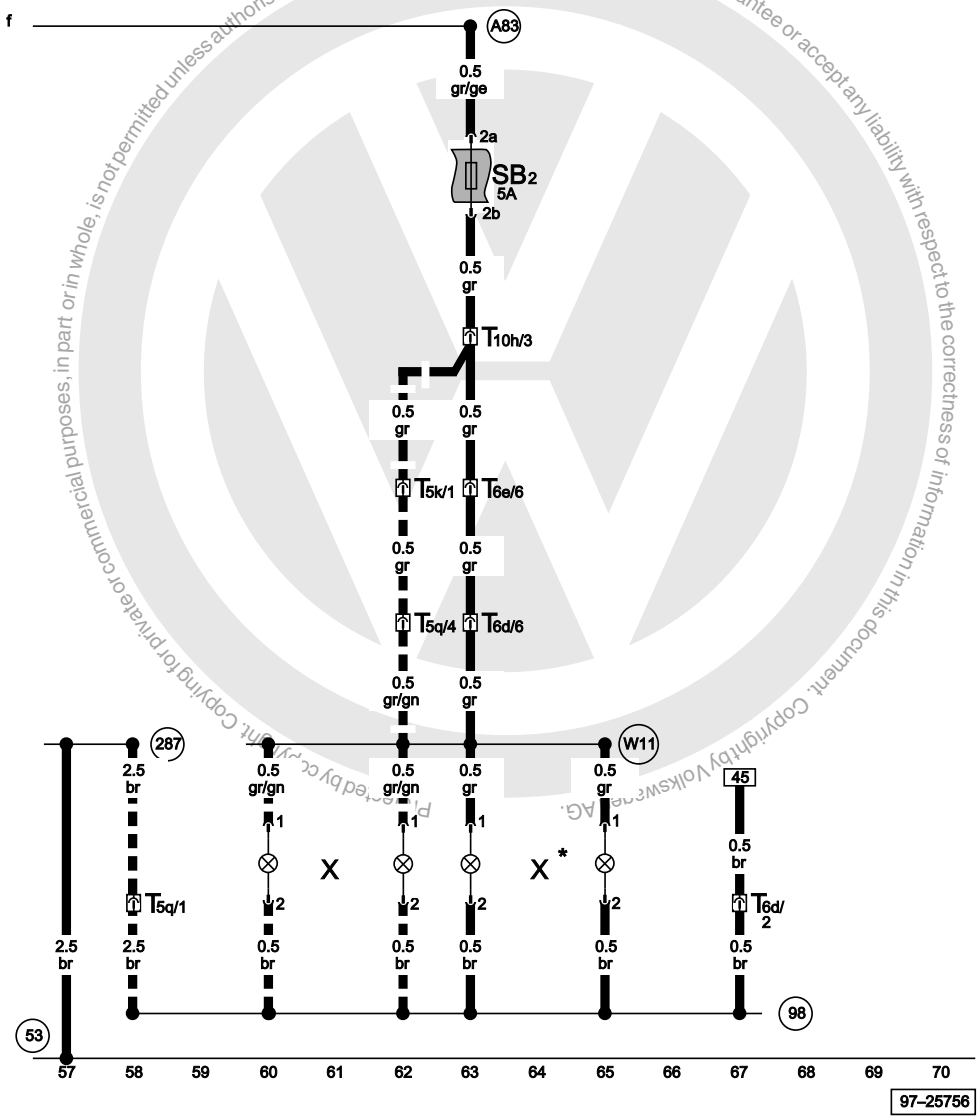

ws	=	white
sw	=	black
ro	=	red
br	=	brown
gn	=	green
bl	=	blue
gr	=	grey
li	=	purple
ge	=	yellow
or	=	orange
rs	=	pink

Number plate light

SB2	Fuse -2- on fuse box
T5k	5-pin connector, black, in C pillar, right
T5q	5-pin connector, black, in tailgate/bootlid, rear right
T6d	6-pin connector, in tailgate/bootlid
T6e	6-pin connector, on left C-pillar
T10h	10-pin connector, green, in protective housing for connectors
X	Number plate light
53	Earth point, in tailgate/bootlid, left
98	Earth connection, in tailgate/bootlid wiring harness
287	Earth connection, in wiring harness for tailgate/bootlid
A61	Positive (+) connection (X), in instruments wiring harness
A83	Connection (daytime driving lights), in dash panel wiring harness
W11	Connection (58), in tailgate/bootlid wiring harness
*	Only models Polo Classic
<fo:external-graphic src="/../PDOC/samba/tools/png-convert/out//slp/ft_icons/m_m_m2.png" content-width="20pt" scaling="uniform"/>	Only models Polo Variant

satelettronica

1.9 l turbo-diesel engine/ 81 kW, engine codes ASK, ASV

From May 2000

1.9 l/66 kW turbo-diesel engine, engine codes AGR, ALH

From May 2000

1.9 l turbo-diesel engine/ 81 kW, engine codes ASV, From May 2000

1.9 l/66 kW turbo-diesel engine, engine codes ALH, From May 2000

For alternatives to relay and fuse positions as well as multi-pin connector wiring - see "Fitting locations" section.

Relay for coolant heater elements

Relay locations on relay plate:

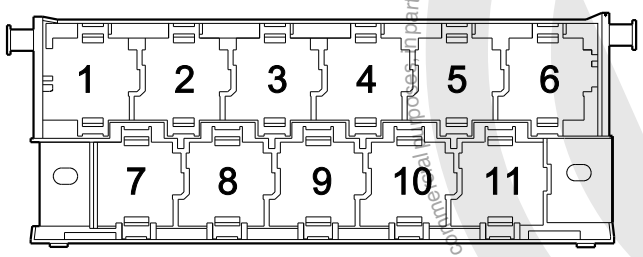

97-22850

2 - Glow plug relay (103)
7 - Terminal 30 voltage supply relay
11 - Fuel shut- off control unit

Note:

- *The number in brackets behind the part designation denotes the control number on the housing.*

Fuse colours

30 A - green
25 A - white
20 A - yellow
15 A - blue

Protected by copyright. Copyright by Volkswagen AG. Volkswagen AG does not guarantee or accept any liability with respect to the correctness of information in this document. Copyright by Volkswagen AG. Reproduction, in part or in whole, is not permitted unless authorised by Volkswagen AG. Volkswagen AG does not guarantee or accept any liability with respect to the correctness of information in this document. Copyright by Volkswagen AG.

satelettronica

10 A - red
7.5 A - brown
5 A - beige
3 A - purple

Protected by copyright. Copying for private or commercial purposes, in part or in whole, is not permitted unless authorised by Volkswagen AG. Volkswagen AG does not guarantee or accept any liability with respect to the correctness of information in this document. Copyright by Volkswagen AG.

satelettronica

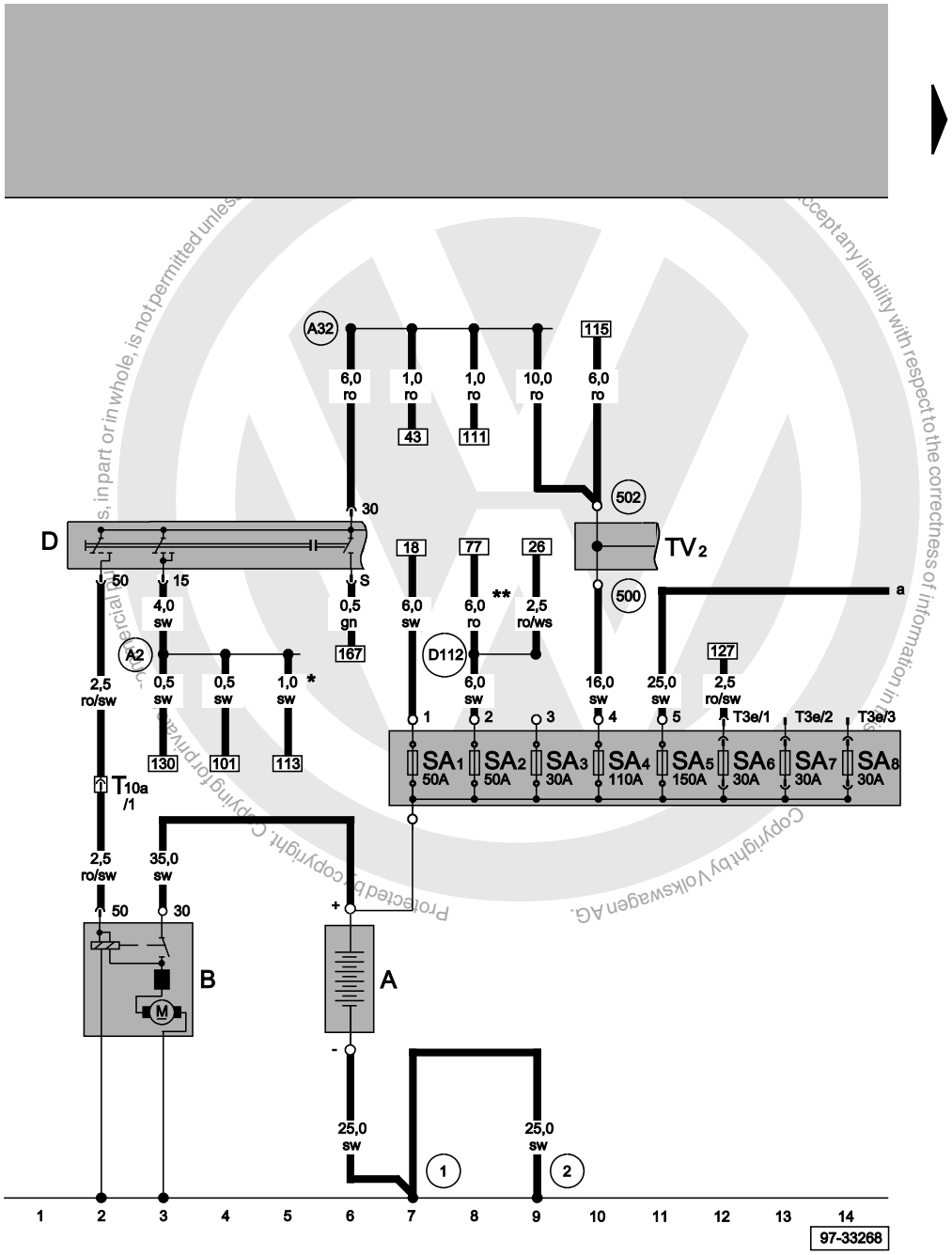

Starter, battery, ignition/starter switch, fuse box / battery

A	Battery
B	Starter
D	Ignition/starter switch
SA1	Fuse -1- on battery fuse box
SA2	Fuse -2- on battery fuse box
SA3	Fuse -3- on battery fuse box
SA4	Fuse -4- on battery fuse box
SA5	Fuse -5- on battery fuse box
SA6	Fuse -6- on battery fuse box
SA7	Fuse -7- on battery fuse box
SA8	Fuse -8- on battery fuse box
T3e	3-pin connector, on battery fuse box
T10a	10-pin connector, black, coupling station under relay carrier, left
TV2	Terminal 30 wiring junction
1	Earth strap, battery - body
2	Earth strap, gearbox - body
500	Screw connection -1- (30), on relay plate
502	Screw connection -1- (30a), on relay plate
A2	Positive (+) connection (15), in dash panel wiring harness
A32	Positive (+) connection (30), in dash panel wiring harness
D112	Connection -10-, in engine compartment wiring harness
*	Only models with airbags
**	Only models with heater for radiator

ws	=	white
sw	=	black
ro	=	red
br	=	brown
gn	=	green
bl	=	blue
gr	=	grey
li	=	purple
ge	=	yellow
or	=	orange
rs	=	pink

satelettronica

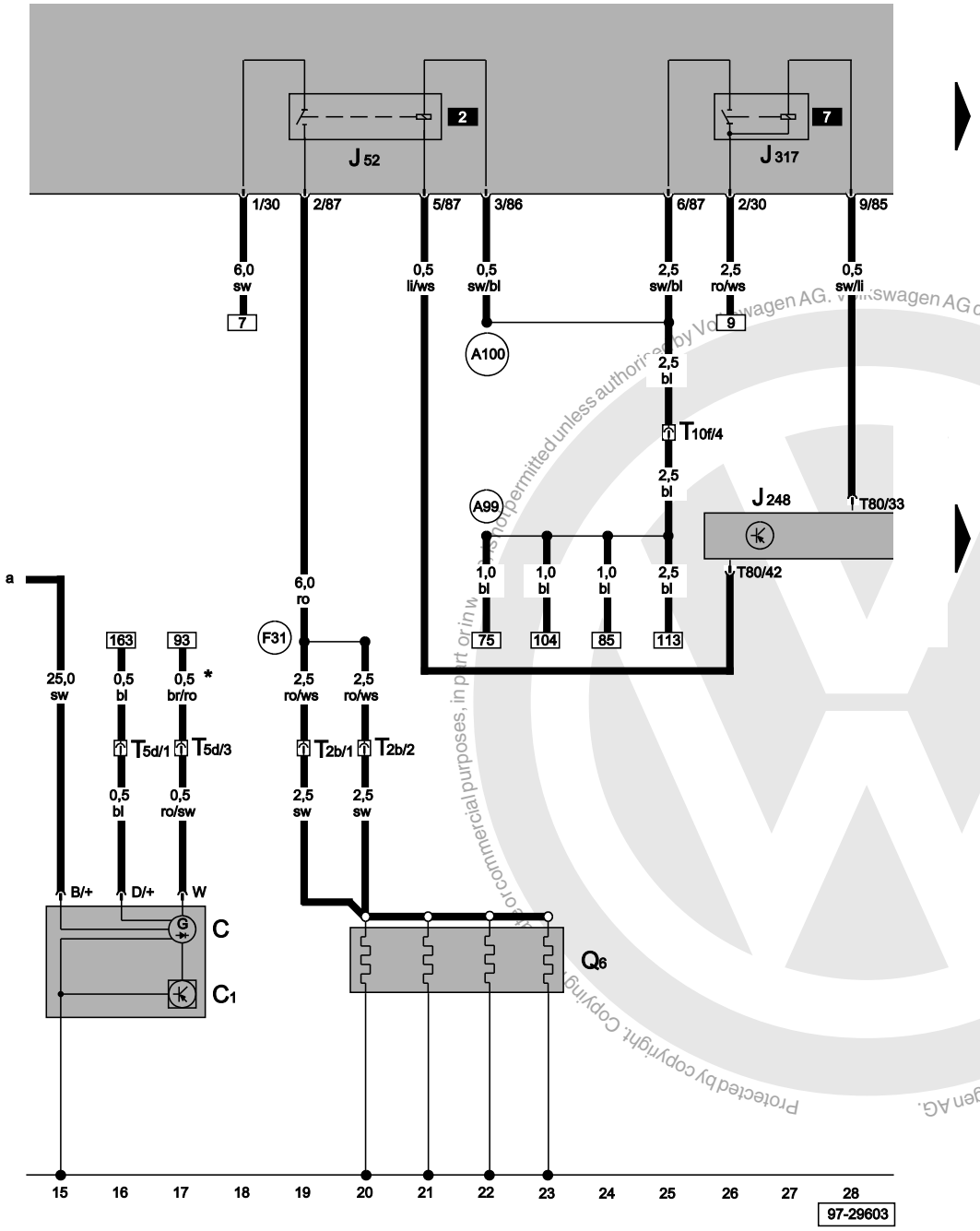

Diesel direct injection system control unit, alternator, voltage regulator, glow plugs (engine), relay for glow plugs, voltage supply relay

C	Alternator
C1	Voltage regulator
J52	Glow plug relay
J248	Diesel direct injection system control unit
J317	Terminal 30 voltage supply relay
Q6	Glow plugs (engine)
T2b	2-pin connector, in engine compartment
T5d	5-pin connector, in engine compartment, near gearbox
T10f	10-pin connector, purple, coupling station under relay carrier, left
T80	80-pin connector
A99	Connection -1- (87), in dash panel wiring harness
A100	Connection -2- (87), in dash panel wiring harness
F31	Connection (glow plugs - engine) in diesel direct injection system wiring harness
*	Only models with heater for radiator

ws	=	white
sw	=	black
ro	=	red
br	=	brown
gn	=	green
bl	=	blue
gr	=	grey
li	=	purple
ge	=	yellow
or	=	orange
rs	=	pink

Protected by copyright. Copying for commercial purposes, in part or in whole, is not permitted unless authorised by Volkswagen AG. Volkswagen AG does not guarantee or accept any liability with respect to the correctness of information in this document. Copyright by Volkswagen AG.

satelettronica

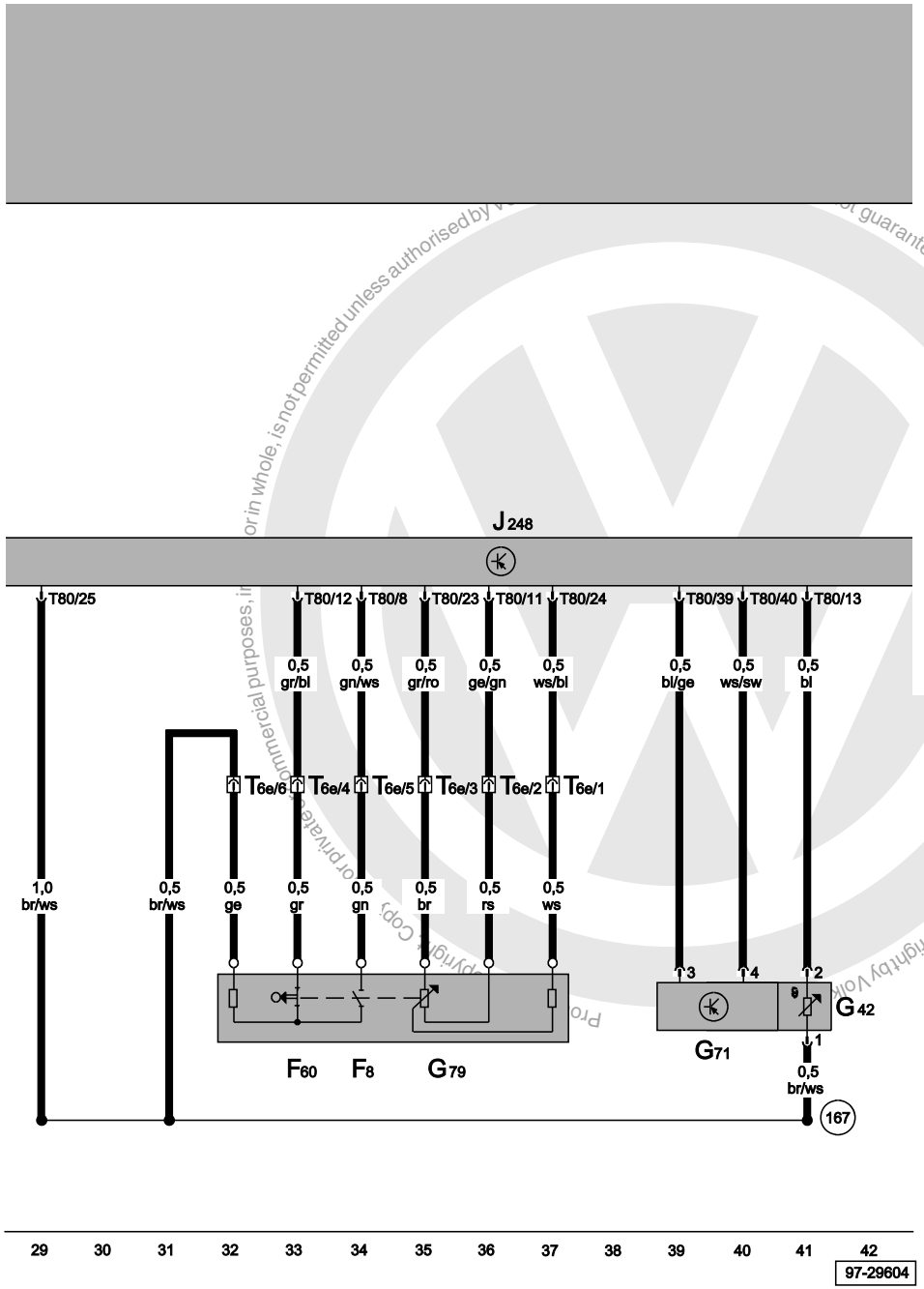

Diesel direct injection system control unit, accelerator pedal position sender, intake manifold pressure sender, intake air temperature sender, kick-down switch, idling switch

F8	Kick-down switch
F60	Idling switch
G42	Intake air temperature sender
G71	Intake manifold pressure sender
G79	Accelerator pedal position sender
J248	Diesel direct injection system control unit
T6e	6-pin connector, near accelerator pedal position sender
T80	80-pin connector
167	Earth connection -4-, in engine compartment wiring harness

ws	=	white
sw	=	black
ro	=	red
br	=	brown
gn	=	green
bl	=	blue
gr	=	grey
li	=	purple
ge	=	yellow
or	=	orange
rs	=	pink

satelettronica

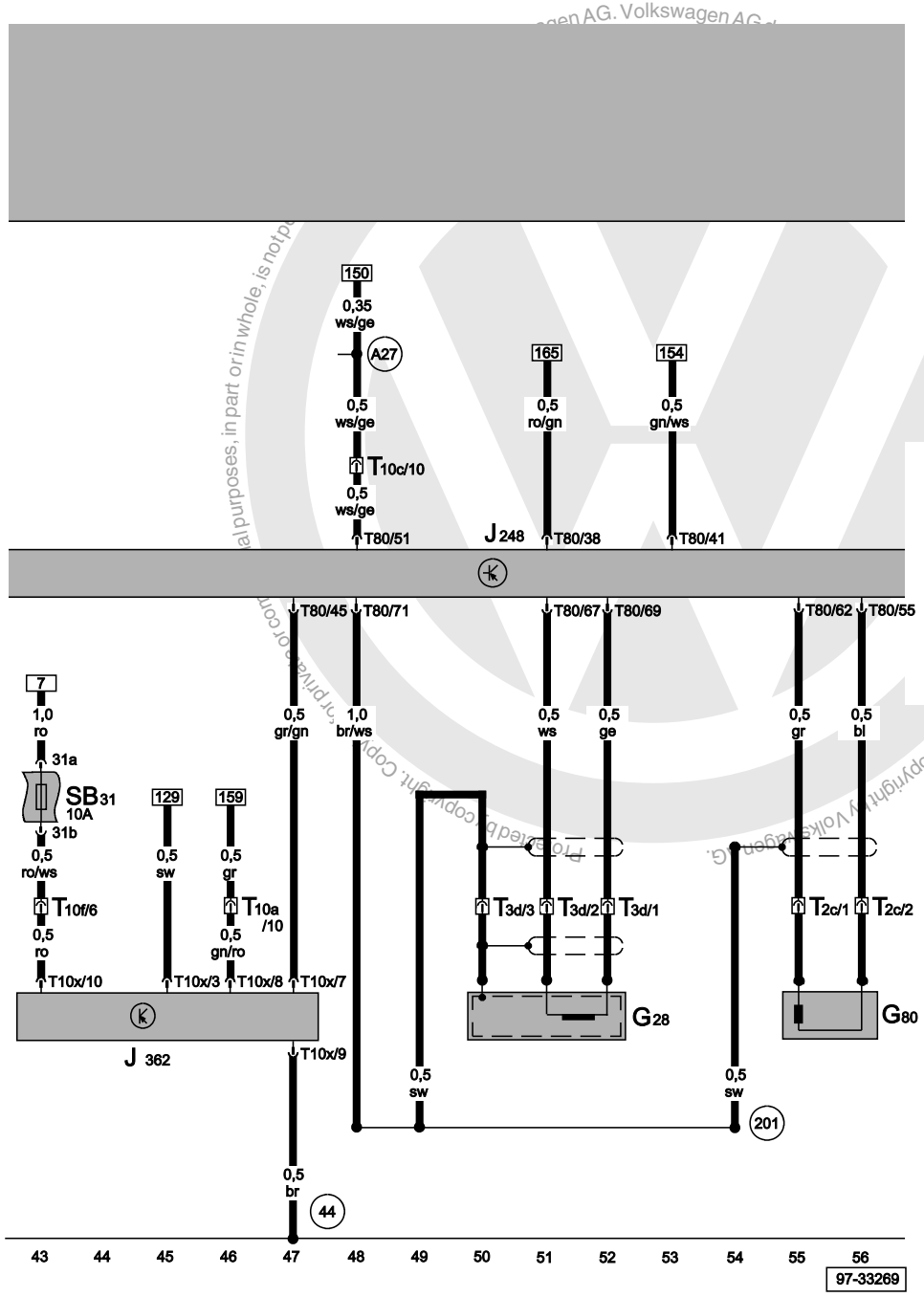

Diesel direct injection system control unit, engine speed sender, needle lift sender, immobilizer control unit

G28	Engine speed sender
G80	Needle lift sender
J248	Diesel direct injection system control unit
J362	Immobilizer control unit
SB31	Fuse -31- on fuse box
T2c	2-pin connector, near needle lift sender
T3d	3-pin connector, near engine speed sender
T10a	10-pin connector, black, coupling station under relay carrier, left
T10c	10-pin connector, brown, coupling station under relay carrier, left
T10f	10-pin connector, purple, coupling station under relay carrier, left
T10x	10-pin connector, on immobilizer control unit
T80	80-pin connector
44	Earth point, lower part of left A-pillar
201	Earth connection -5-, in engine compartment wiring harness
A27	Connection (speed signal), in dash panel wiring harness

ws	=	white
sw	=	black
ro	=	red
br	=	brown
gn	=	green
bl	=	blue
gr	=	grey
li	=	purple
ge	=	yellow
or	=	orange
rs	=	pink

satelettronica

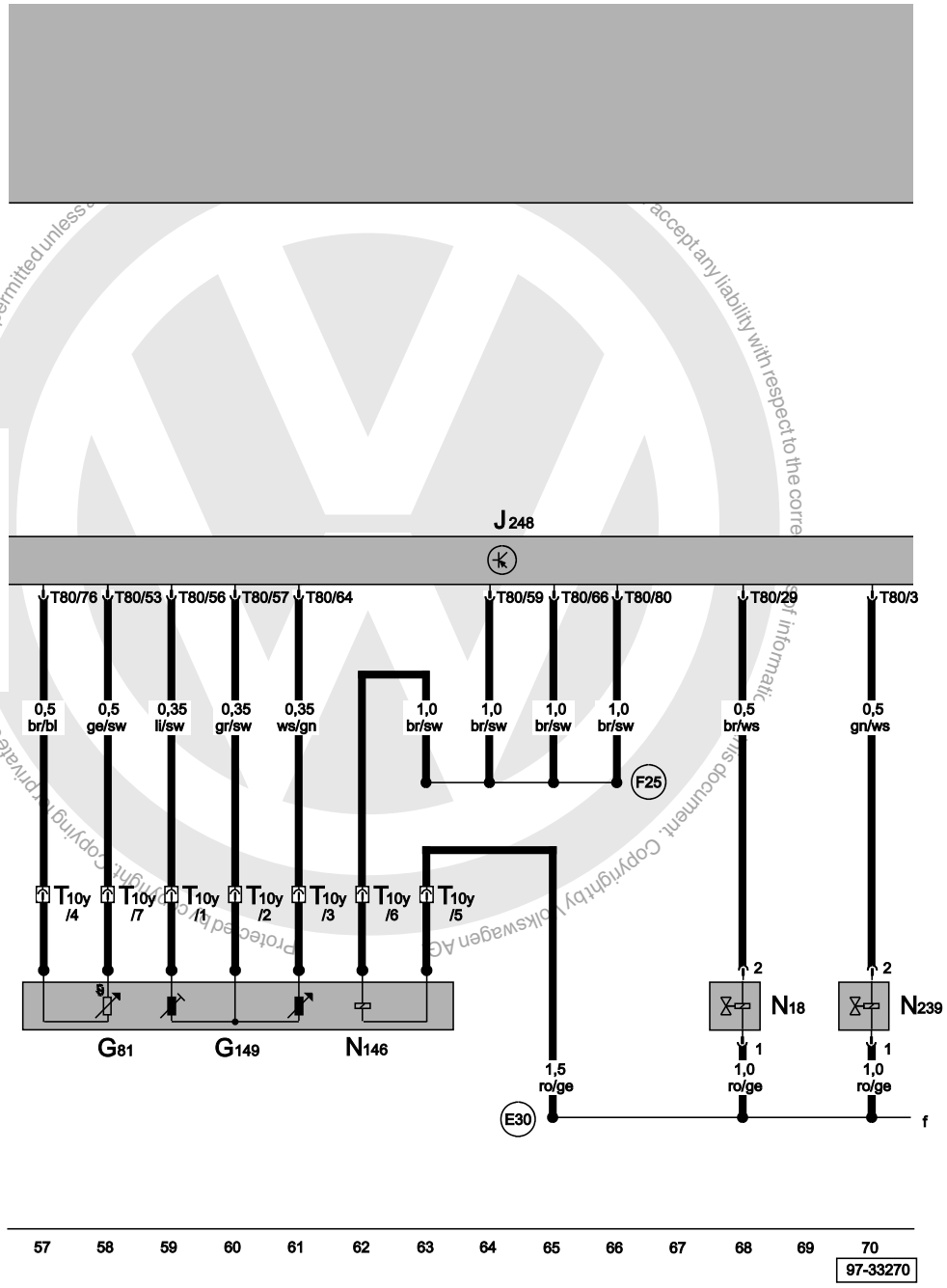

Diesel direct injection system control unit, metering adjuster, exhaust gas recirculation valve, intake manifold flap change-over valve, fuel temperature sender, modulating piston movement sender

G81	Fuel temperature sender
G149	Modulating piston movement sender
J248	Diesel direct injection system control unit
N18	Exhaust gas recirculation valve
N146	Metering adjuster
N239	Intake manifold flap change-over valve
T10y	10-pin connector, blue, on part of left A-pillar
T80	80-pin connector
E30	Connection (87a), in engine wiring harness
F25	Connection -1-, in diesel direct injection system wiring harness

ws	=	white
sw	=	black
ro	=	red
br	=	brown
gn	=	green
bl	=	blue
gr	=	grey
li	=	purple
ge	=	yellow
or	=	orange
rs	=	pink

satelettronica

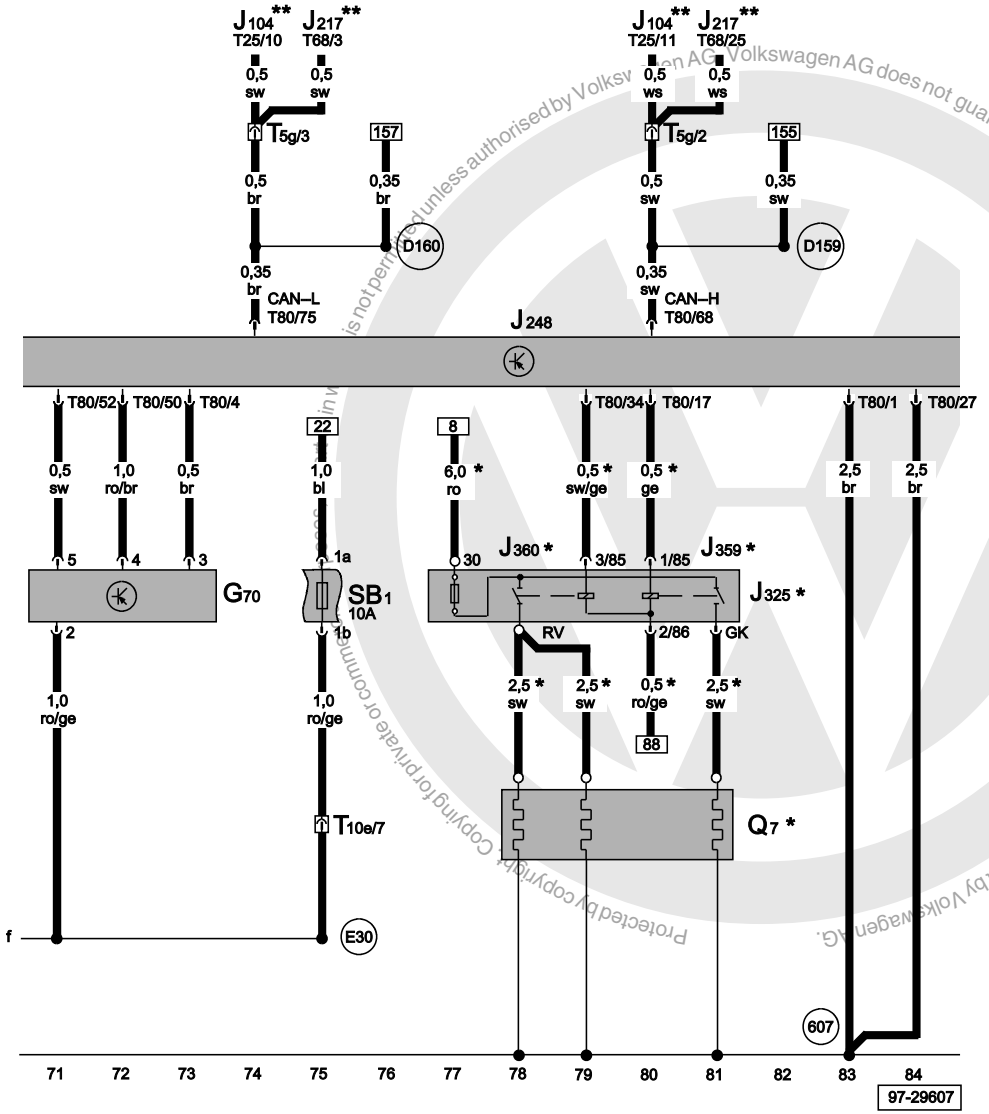

Diesel direct injection system control unit, air mass metercoolant, heater element relay, coolant heating elements

G70	Air mass meter
J104	ABS with EDL control unit
J217	Automatic gearbox control unit
J248	Diesel direct injection system control unit
J325	Relay for coolant heater elements, in engine
J359	Low heat output relay
J360	High heat output relay
Q7	Coolant heating elements
SB1	Fuse -1- on fuse box
T5g	5-pin connector, pink, coupling station under relay carrier, left
T10e	10-pin connector, green, coupling station under relay carrier, left
T25	25-pin connector
T68	68-pin connector
T80	80-pin connector
607	Earth point, on left in plenum chamber
E30	Connection (87a), in engine wiring harness
D159	Positive (+) connection (high bus), in interior wiring harness
D160	Positive (+) connection (low bus), in engine compartment wiring harness
*	Only models with heater for radiator
**	Depends on equipment

ws	=	white
sw	=	black
ro	=	red
br	=	brown
gn	=	green
bl	=	blue
gr	=	grey
li	=	purple
ge	=	yellow
or	=	orange
rs	=	pink

Protected by copyright. Copying for private or commercial purposes is not permitted unless authorised by Volkswagen AG. Volkswagen AG does not guarantee or accept any liability with respect to the correctness of information in this document. Copyright by Volkswagen AG.

satelettronica

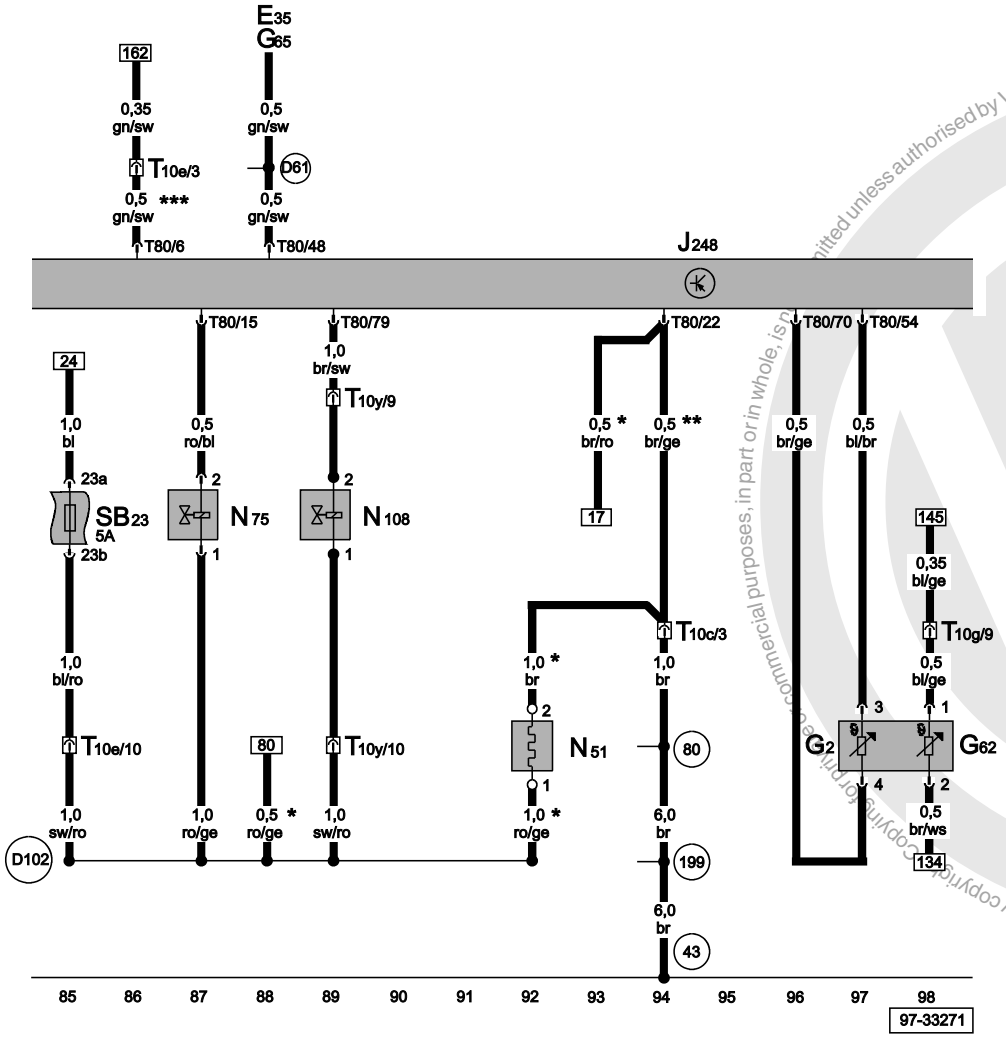

Diesel direct injection system control unit, coolant temperature sender, intake manifold preheating heater element, charge pressure control solenoid valve, commencement of injection valve

E35	Air conditioner switch
G2	Coolant temperature sender
G62	Coolant temperature sender
G65	High pressure sender
J248	Diesel direct injection system control unit
N51	Intake manifold preheating heater element
N75	Charge pressure control solenoid valve
N108	Commencement of injection valve
SB23	Fuse -23- on fuse box
T10c	10-pin connector, brown, coupling station under relay carrier, left
T10e	10-pin connector, green, coupling station under relay carrier, left
T10g	10-pin connector, red, coupling station under relay carrier, left
T10y	10-pin connector, blue, on part of left A-pillar
T80	80-pin connector
43	Earth point, lower part of right A-pillar
80	Earth connection -1-, in instruments wiring harness
199	Earth connection -3-, in dash panel wiring harness
D61	Connection (air conditioner), in engine compartment wiring harness
D102	Connection -2-, in engine compartment wiring harness
*	Only models with heater for radiator
**	Only models without heater for radiator
***	Engine speed signal from engine control unit

ws	=	white
sw	=	black
ro	=	red
br	=	brown
gn	=	green
bl	=	blue
gr	=	grey
li	=	purple
ge	=	yellow
or	=	orange
rs	=	pink

Protected by copyright. Copying for private or commercial purposes, in part or in whole, is not permitted unless authorised by Volkswagen AG. Volkswagen AG does not guarantee or accept any liability with respect to the correctness of information in this document. Copyright by Volkswagen AG.
satelettronica

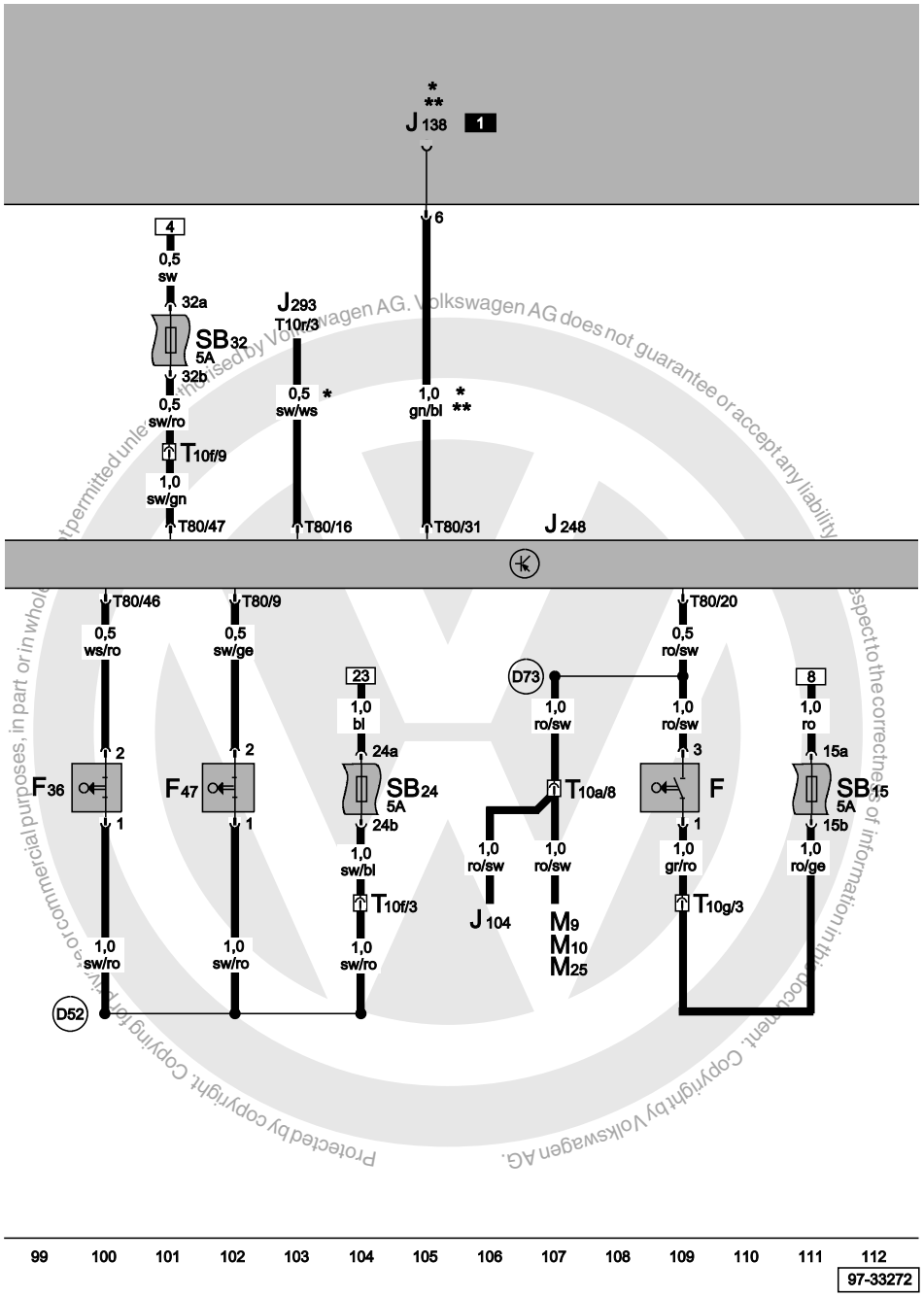

Diesel direct injection system control unit, brake light switch, clutch pedal switch, cruise control system brake pedal switch/diesel direct inj. system

F	Brake light switch
F36	Clutch pedal switch
F47	Cruise control system brake pedal switch (diesel direct injection system)
J104	ABS with EDL control unit
J138	Radiator fan run-on control unit
J248	Diesel direct injection system control unit
J293	Radiator fan control unit
M9	Brake light bulb, left
M10	Brake light bulb, right
M25	High level brake light bulb
SB15	Fuse -15- on fuse box
SB24	Fuse -24- on fuse box
SB32	Fuse -32- on fuse box
T10a	10-pin connector, black, coupling station under relay carrier, left
T10f	10-pin connector, purple, coupling station under relay carrier, left
T10g	10-pin connector, red, coupling station under relay carrier, left
T80	80-pin connector
D52	Positive (+) connection (15a), in engine compartment wiring harness
D73	Positive (+) connection (54), in engine compartment wiring harness
*	Only models with air conditioner
**	Only for engine codes ASK, ASV

ws	=	white
sw	=	black
ro	=	red
br	=	brown
gn	=	green
bl	=	blue
gr	=	grey
li	=	purple
ge	=	yellow
or	=	orange
rs	=	pink

Protected by copyright. Copying for private or commercial purposes, in part or in whole, is not permitted unless authorised by Volkswagen AG. Volkswagen AG does not guarantee or accept any liability with respect to the correctness of information in this document. Copyright by Volkswagen AG.

satelettronica

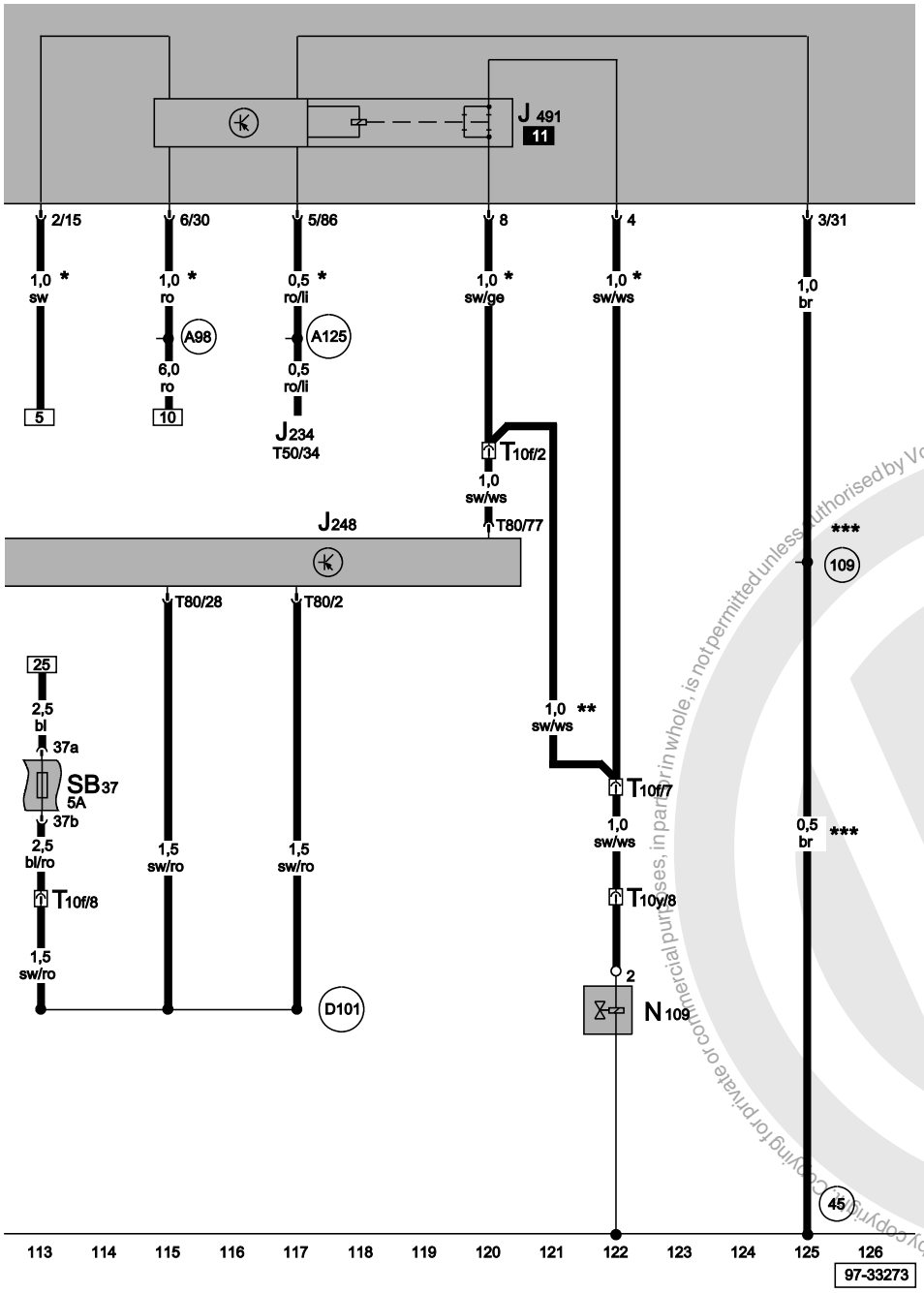

Diesel direct injection system control unit, fuel shut-off control unit (Crash), fuel shut-off valve

J234	Airbag control unit
J248	Diesel direct injection system control unit
J491	Fuel shut-off control unit (crash)
N109	Fuel shut-off valve
SB23	Fuse -23- on fuse box
T10f	10-pin connector, purple, coupling station under relay carrier, left
T10y	10-pin connector, blue, on part of left A-pillar
T50	50-pin connector
T80	80-pin connector
45	Earth point, behind dash panel - centre
109	Earth connection, in airbag wiring harness
A98	Positive (+) connection -4- (30), in dash panel wiring harness
A125	Connection (crash signal), in dash panel wiring harness
D101	Connection -1-, in engine compartment wiring harness
*	Only models with airbags
**	Only models without airbags
***	Does not models with driver airbag

ws	=	white
sw	=	black
ro	=	red
br	=	brown
gn	=	green
bl	=	blue
gr	=	grey
li	=	purple
ge	=	yellow
or	=	orange
rs	=	pink

Protected by copyright. Copying for private or commercial purposes, in part or in whole, is not permitted unless authorised by Volkswagen AG. Volkswagen AG does not guarantee or accept any liability with respect to the correctness of information in this document. Copyright by Volkswagen AG.

satelettronica

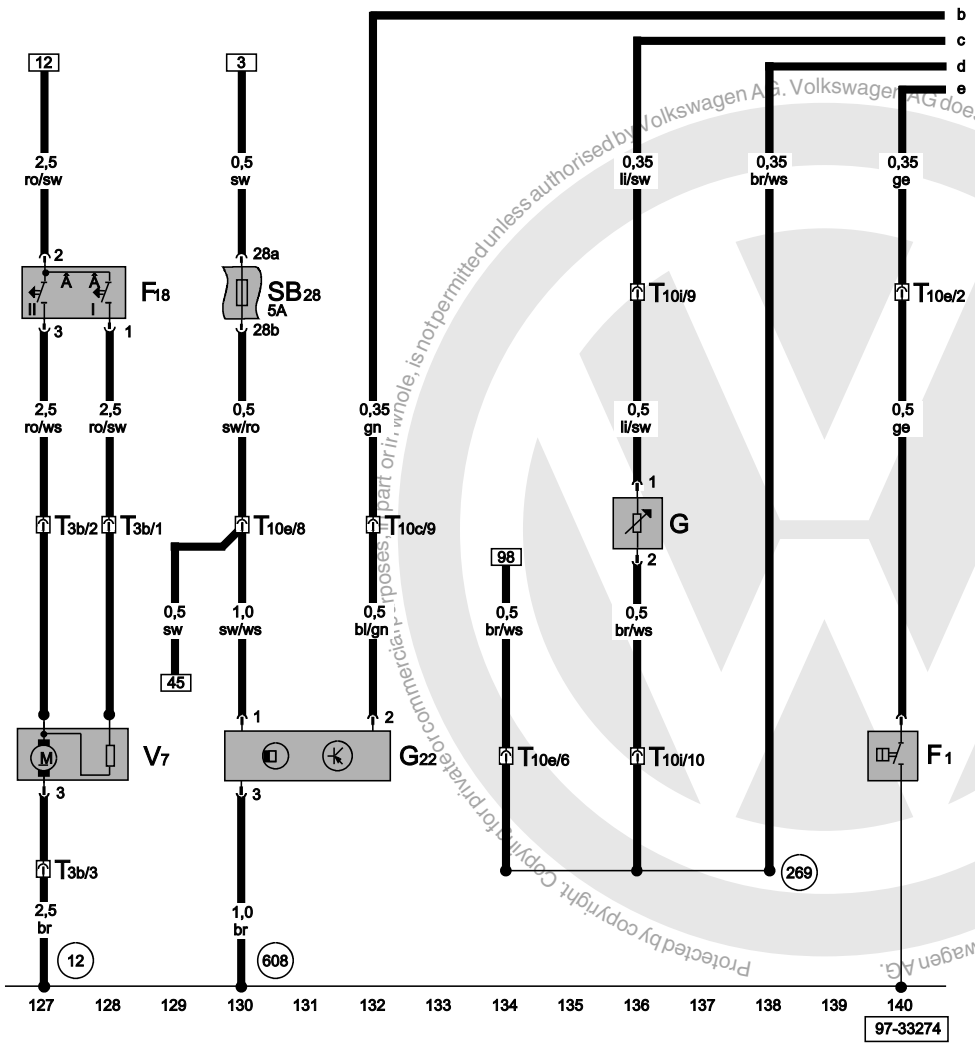

Oil pressure switch, fuel gauge sender, speedometer sender, radiator fan, radiator fan thermo-switch

G	Fuel gauge sender
G22	Speedometer sender (Hall sender, on gearbox)
F1	Oil pressure switch
F18	Radiator fan thermo-switch
SB28	Fuse -28- on fuse box
T3b	3-pin connector, on radiator fan
T10c	10-pin connector, brown, coupling station under relay carrier, left
T10e	10-pin connector, green, coupling station under relay carrier, left
T10i	10-pin connector, orange, coupling station under relay carrier, left
V7	Radiator fan
12	Earth point, left in engine compartment
269	Earth connection (sender earth) -1-, in dash panel wiring harness
608	Earth point, in centre of plenum chamber

ws	=	white
sw	=	black
ro	=	red
br	=	brown
gn	=	green
bl	=	blue
gr	=	grey
li	=	purple
ge	=	yellow
or	=	orange
rs	=	pink

Protected by copyright. Copying for private or commercial purposes, in part or in whole, is not permitted unless authorised by Volkswagen AG. Volkswagen AG does not guarantee or accept any liability with respect to the correctness of information in this document. Copyright by Volkswagen AG.

satelettronica

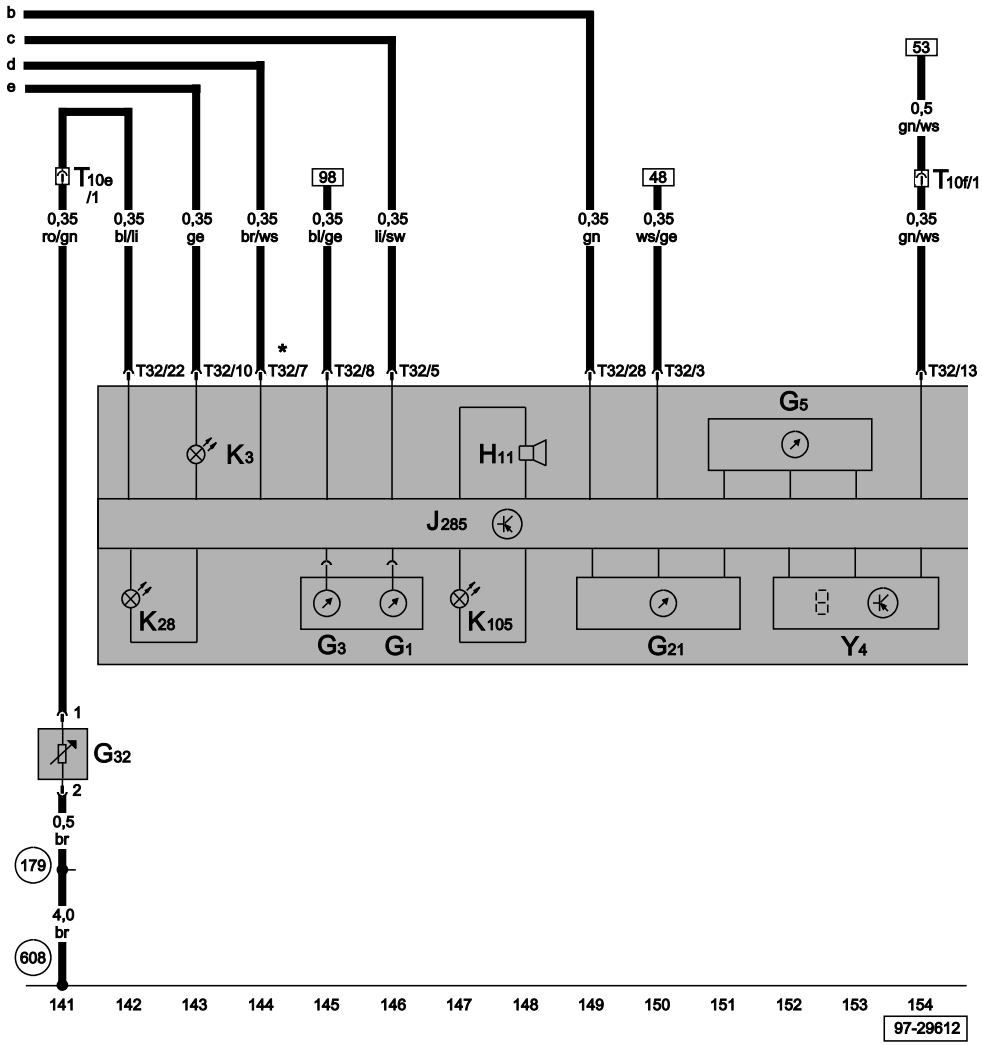

Control unit with display in dash panel insert, oil pressure warning lamp, coolant shortage indicator sender

G1	Fuel gauge
G3	Coolant temperature gauge
G5	Rev. counter
G21	Speedometer
G32	Coolant shortage indicator sender
H11	Oil pressure warning buzzer
J285	Control unit with display in dash panel insert
K3	Oil pressure warning lamp
K28	Coolant temperature/coolant shortage warning lamp
K105	Reserve fuel warning lamp
T10e	10-pin connector, green, coupling station under relay carrier, left
T10f	10-pin connector, purple, coupling station under relay carrier, left
T32	32-pin connector, blue, on dash panel insert
Y4	Odometer display
179	Earth connection, in left headlight wiring harness
608	Earth point, in centre of plenum chamber
*	Output for signal earth

ws	=	white
sw	=	black
ro	=	red
br	=	brown
gn	=	green
bl	=	blue
gr	=	grey
li	=	purple
ge	=	yellow
or	=	orange
rs	=	pink

Protected by copyright. Copying for private or commercial purposes, in part or in whole, is not permitted unless authorised by Volkswagen AG. Volkswagen AG does not guarantee or accept any liability with respect to the correctness of information in this document. Copyright by Volkswagen AG.
satelettronica

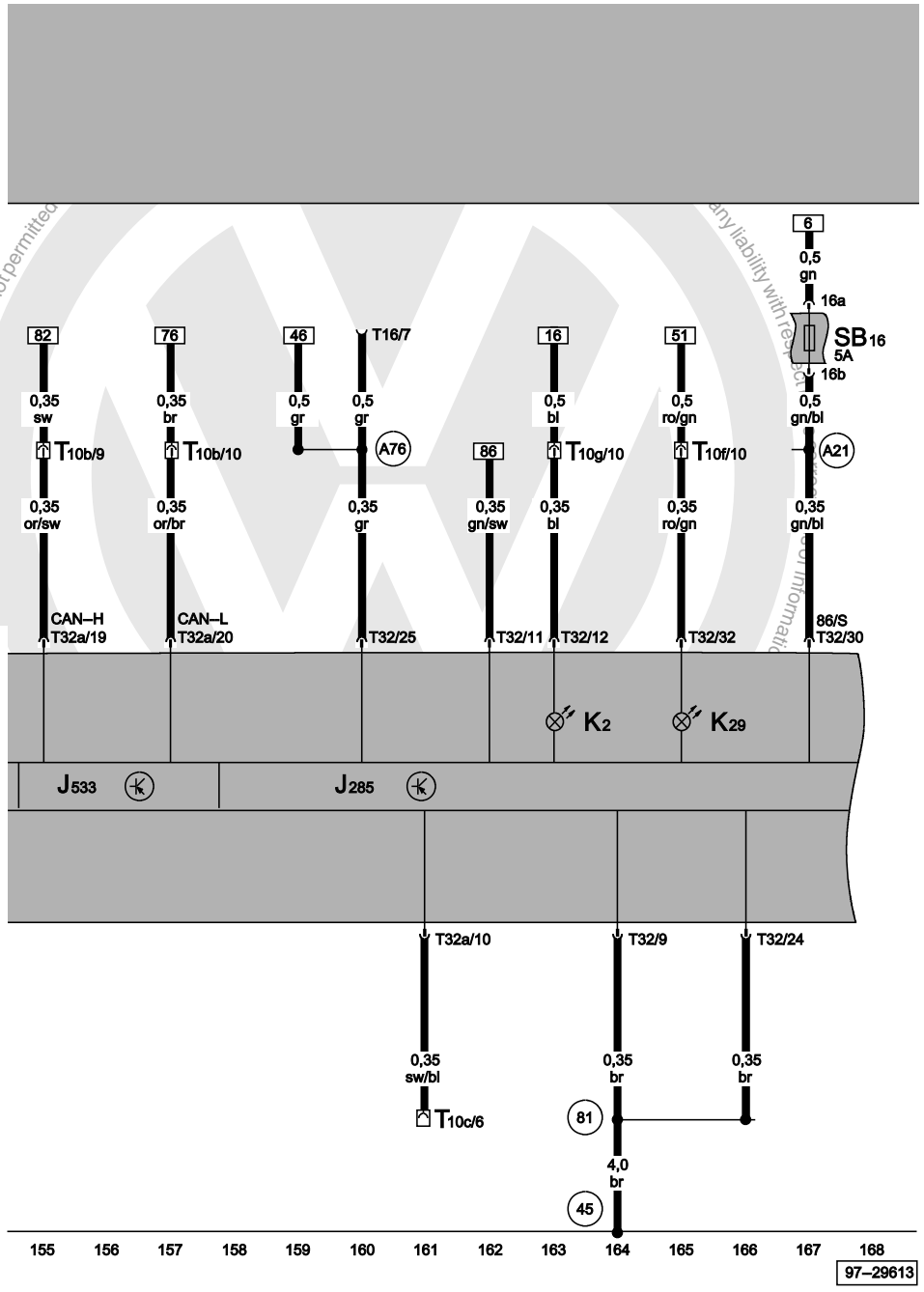

Control unit with display in dash panel insert, diagnostic connector, alternator warning lamp, glow period warning lamp

J285	Control unit with display in dash panel insert
J533	Data bus diagnostic interface
K2	Alternator warning lamp
K29	Glow period warning lamp
SB16	Fuse -16- on fuse box
T10b	10-pin connector, white, coupling station under relay carrier, left
T10f	10-pin connector, brown, coupling station under relay carrier, left
T10f	10-pin connector, purple, coupling station under relay carrier, left
T10g	10-pin connector, red, coupling station under relay carrier, left
T16	16-pin connector, diagnostic connector
T32	32-pin connector, blue, on dash panel insert
T32a	32-pin connector, green, on dash panel insert
45	Earth point, behind dash panel - centre
81	Earth connection -1-, in dash panel wiring harness
A21	Connection (86s), in dash panel wiring harness
A76	Connection (diagnosis wire K), in dash panel wiring harness

ws	=	white
sw	=	black
ro	=	red
br	=	brown
gn	=	green
bl	=	blue
gr	=	grey
li = purple
ge = yellow
or = orange
rs = pink

satelettronica

1.6 l Simos/74 kW, engine codes AUR

From May 2000

For alternatives to relay and fuse positions as well as multi-pin connector wiring - see "Fitting locations" section.

Relay locations on relay plate:

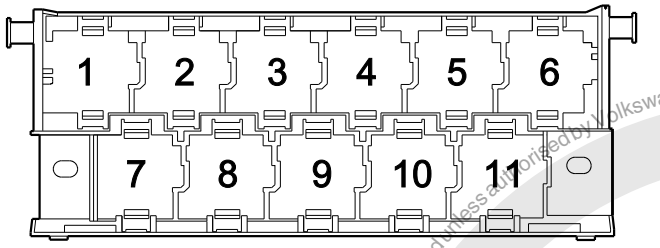

97-22850

2 - Fuel pump relay (167)
5 - Secondary air pump relay (100)
7 - Current supply relay for Simos control unit (30)
11 - Fuel shut- off control unit (405)

Note:

- *The number in brackets behind the part designation denotes the control number on the housing.*

Fuse colours

30 A - green
25 A - white
20 A - yellow
15 A - blue
10 A - red
7.5 A - brown
5 A - beige
3 A - purple

Protected by copyright. Copying for private or commercial purposes, in part or in whole, is not permitted unless authorized by Volkswagen AG. Volkswagen AG does not guarantee or accept any liability with respect to the correctness of information in this document. Copyright by Volkswagen AG.

satelettronica

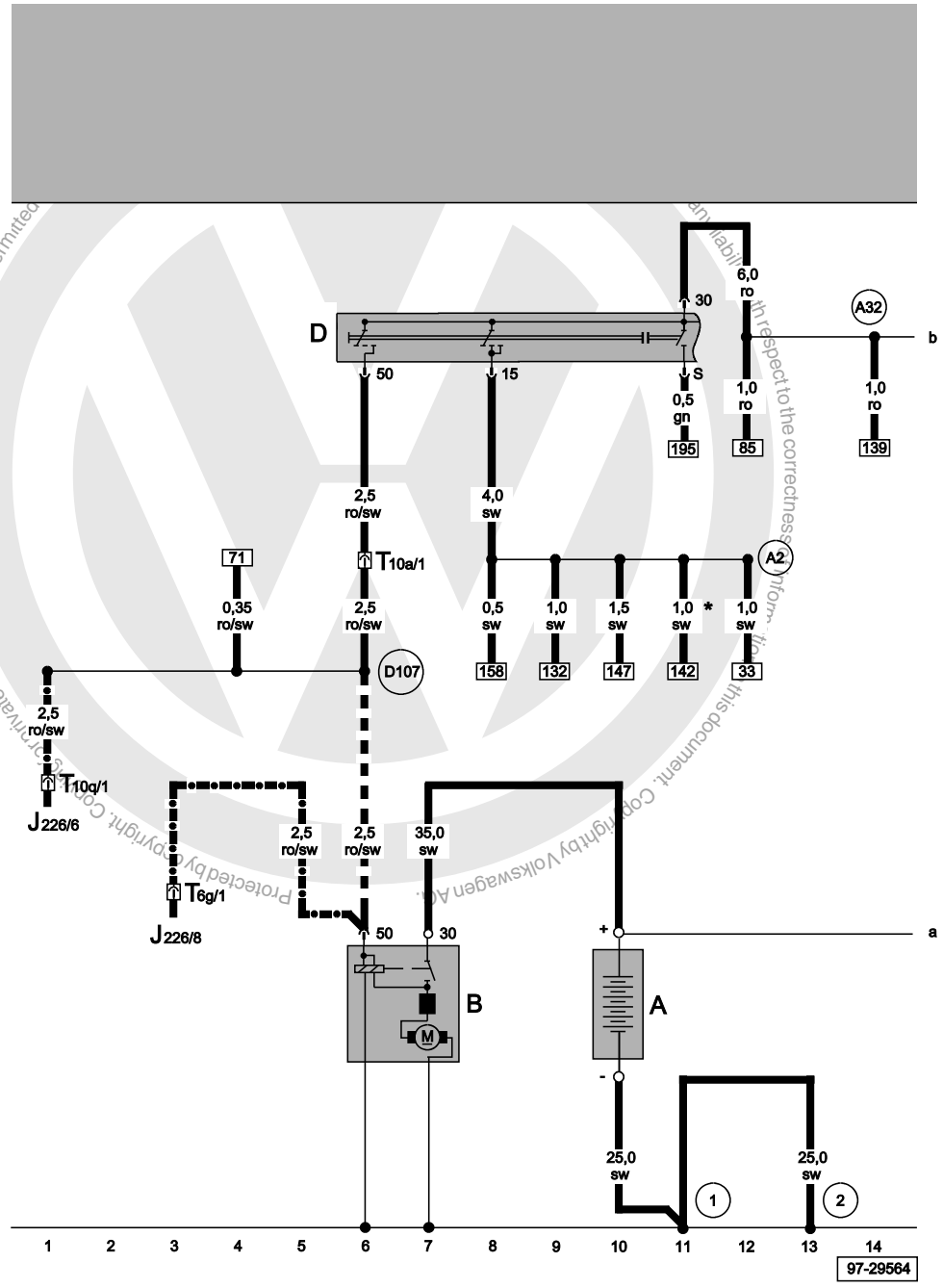

Starter, battery, ignition/starter switch

A	Battery
B	Starter
D	Ignition/starter switch
J226	Starter inhibitor and reversing light relay
T6g	6-pin connector, coupling station under relay carrier, left
T10a	10-pin connector, black, coupling station under relay carrier, left
T10q	10-pin connector, coupling station under relay carrier, left
1	Earth strap, battery - body
2	Earth strap, gearbox - body
A2	Positive (+) connection (15), in dash panel wiring harness
A32	Positive (+) connection (30), in dash panel wiring harness
D107	Connection -5-, in engine compartment wiring harness
*	Only models with airbags
<fo:external-graphic src="/../PDOC/samba/tools/png-convert/out//slp/ft_icons/m_m_m.png" content-width="20pt" scaling="uniform"/>	Only models with manual gearbox
<fo:external-graphic src="/../PDOC/samba/tools/png-convert/out//slp/	Only models with automatic gearbox

ws = white

satelettronica

sw	=	black	ft_icons/
ro	=	red	m_k_m.p
br	=	brown	ng"
gn	=	green	content-
bl	=	blue	width="2
gr	=	grey	0pt"
li	=	purple	scaling="
ge	=	yellow	uniform"/
or	=	orange	>
rs	=	pink	

Protected by copyright. Copying for private or commercial purposes, in part or in whole, is not permitted unless authorised by Volkswagen AG. Volkswagen AG does not guarantee or accept any liability with respect to the correctness of information in this document. Copyright by Volkswagen AG.

satelettronica

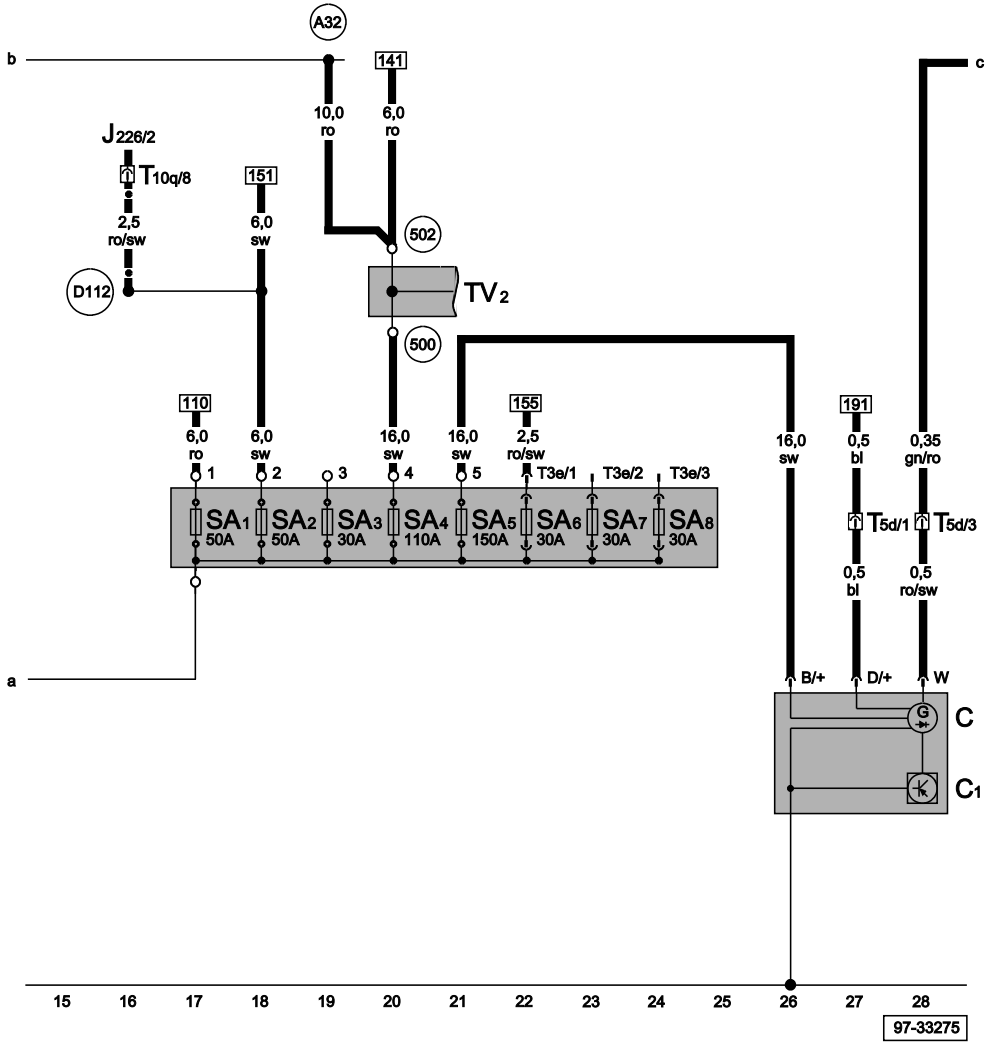

Alternator, ignition/starter switch, fuse box/battery

C	Alternator
C1	Voltage regulator
J226	Starter inhibitor and reversing light relay
SA1	Fuse -1- on battery fuse box
SA2	Fuse -2- on battery fuse box
SA3	Fuse -3- on battery fuse box
SA4	Fuse -4- on battery fuse box
SA5	Fuse -5- on battery fuse box
SA6	Fuse -6- on battery fuse box
SA7	Fuse -7- on battery fuse box
SA8	Fuse -8- on battery fuse box
T3e	3-pin connector, on battery fuse box
T5d	5-pin connector, in engine compartment, near gearbox
T10q	10-pin connector, coupling station under relay carrier, left
TV2	Terminal 30 wiring junction
500	Screw connection -1- (30), on relay plate
502	Screw connection -1- (30a), on relay plate
A32	Positive (+) connection (30), in dash panel wiring harness
D112	Connection -10-, in engine compartment wiring harness
<fo:external-graphic src="/../PDOC/samba/tools/png-convert/out//slp/ft_icons/m_k_m.png" content-width="20pt" scaling="uniform"/>	Only models with automatic gearbox

ws	=	white
sw	=	black
ro	=	red
br	=	brown
gn	=	green
bl	=	blue
gr	=	grey
li	=	purple
ge	=	yellow
or	=	orange
rs	=	pink

Protected by copyright. Copying for commercial purposes, in part or in whole, is not permitted unless author Volkswagen AG. Volkswagen AG does not guarantee or accept any liability with respect to the correctness of information in this document. Copyright by Volkswagen AG.
satelettronica

Simos control unit, ignition transformer

J361	Simos control unit
N152	Ignition transformer
P	Spark plug connector
Q	Spark plugs
SB34	Fuse -34- on fuse box
T4m	4-pin connector, yellow, on ignition transformer
T10g	10-pin connector, red, coupling station under relay carrier, left
T121	121-pin connector
241	Earth connection -2-, engine earth, in engine wiring harness
607	Earth point, on left in plenum chamber

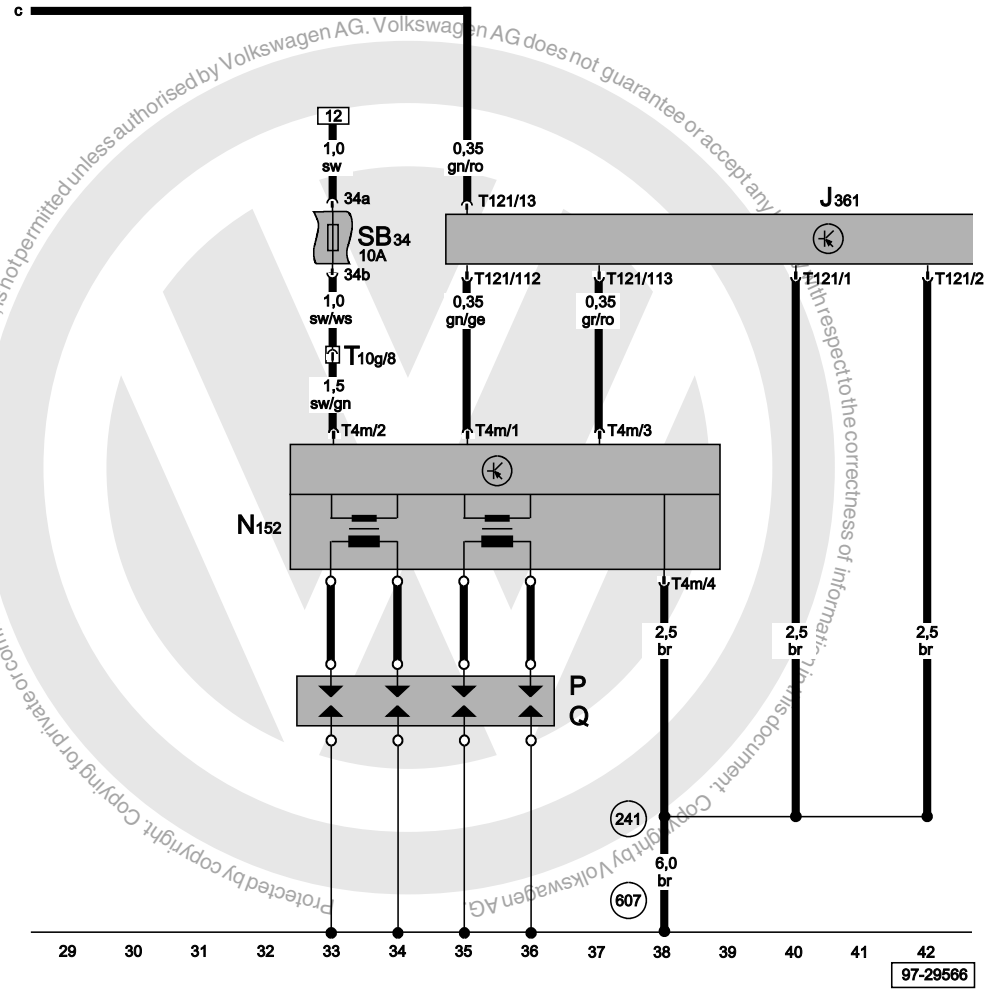

ws	=	white
sw	=	black
ro	=	red
br	=	brown
gn	=	green
bl	=	blue
gr	=	grey
li	=	purple
ge	=	yellow
or	=	orange
rs	=	pink

Protected by copyright. Copying for private or commercial purposes, in part or in whole, is not permitted unless authorised by Volkswagen AG. Volkswagen AG does not guarantee or accept any liability with respect to the correctness of information in this document. Copyright by Volkswagen AG.

satelettronica

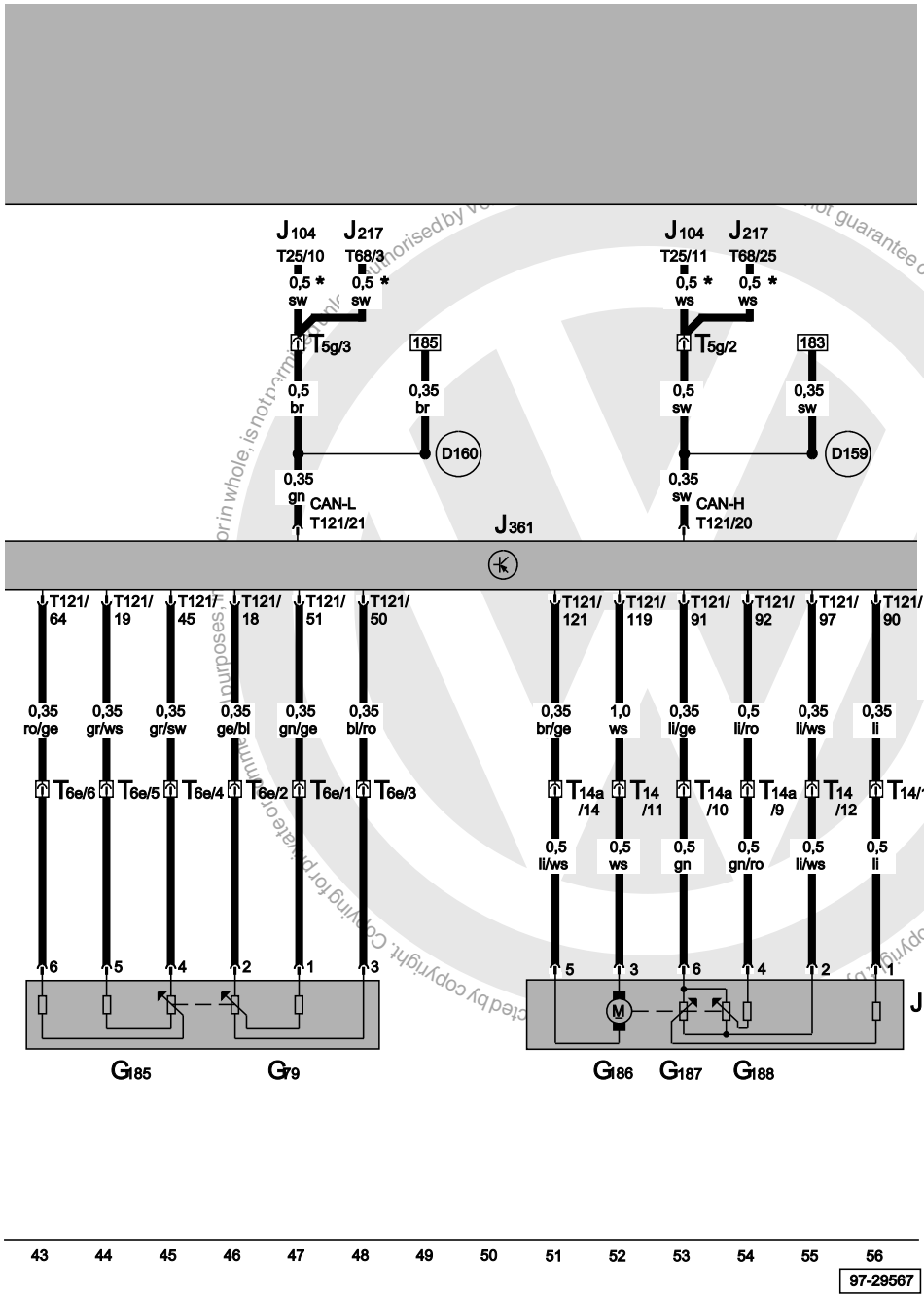

Simos control unit, accelerator pedal position sender, throttle valve control unit

G79	Accelerator pedal position sender
G185	Accelerator pedal position sender -2-
G186	Throttle valve drive (electric throttle operation)
G187	Throttle valve drive angle sender -1- (electric throttle operation)
G188	Throttle valve drive angle sender -2- (electric throttle operation)
J104	ABS with EDL control unit
J217	Automatic gearbox control unit
J338	Throttle valve control unit
J361	Simos control unit
T5g	5-pin connector, pink, coupling station under relay carrier, left
T6e	6-pin connector, near accelerator pedal position sender
T14	14-pin connector, in engine compartment
T14a	14-pin connector, in engine compartment
T25	25-pin connector
T68	68-pin connector
T121	121-pin connector
D159	Connection (high bus), in interior wiring harness
D160	Connection (low bus), in engine compartment wiring harness
*	Depends on equipment

ws	=	white
sw	=	black
ro	=	red
br	=	brown
gn	=	green
bl	=	blue
gr	=	grey
li	=	purple
ge	=	yellow
or	=	orange
rs	=	pink

satelettronica

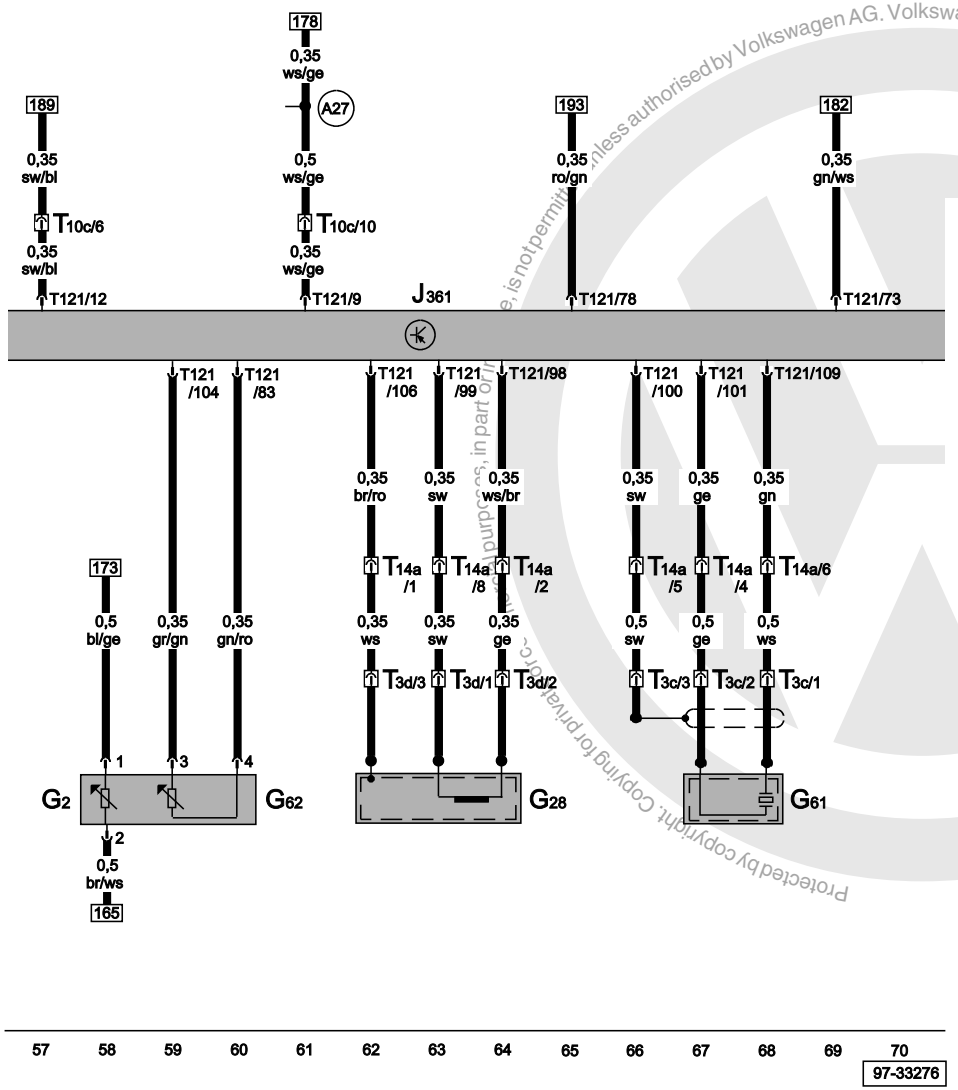

Simos control unit, coolant temperature sender, engine speed sender, knock sensor I

G2	Coolant temperature sender
G28	Engine speed sender
G61	Knock sensor I
G62	Coolant temperature sender
J361	Simos control unit
T3c	3-pin connector, near knock sensor I
T3d	3-pin connector, near engine speed sender
T10c	10-pin connector, brown, coupling station under relay carrier, left
T14a	14-pin connector, in engine compartment
T121	121-pin connector, on Motronic control unit
A27	Connection (speed signal), in dash panel wiring harness

ws	=	white
sw	=	black
ro	=	red
br	=	brown
gn	=	green
bl	=	blue
gr	=	grey
li	=	purple
ge	=	yellow
or	=	orange
rs	=	pink

Protected by copyright. Copying for private or commercial purposes, in part or in whole, is not permitted unless authorised by Volkswagen AG. Volkswagen AG does not guarantee or accept any liability with respect to the correctness of information in this document. Copyright by Volkswagen AG.

satelettronica

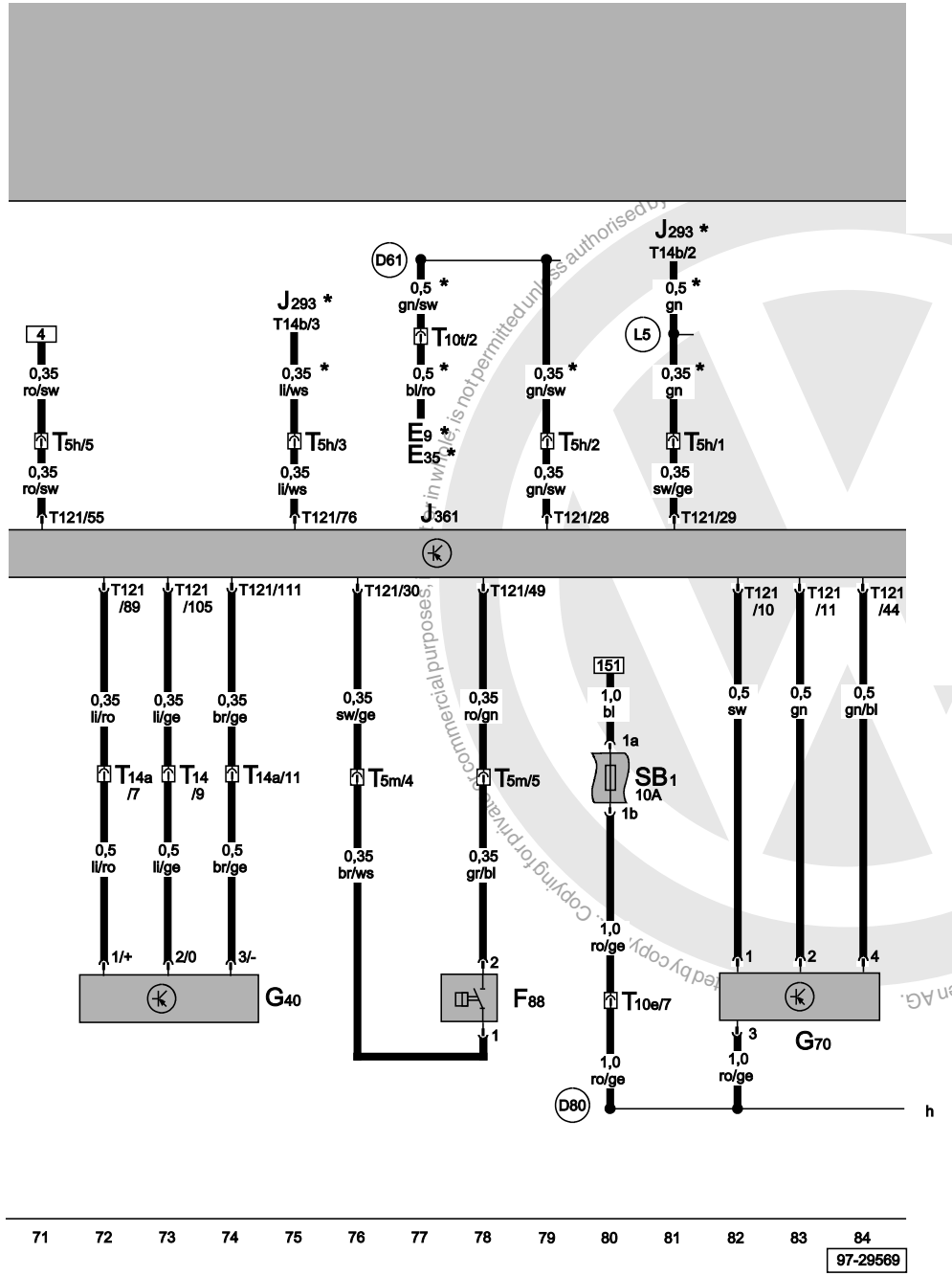

Simos control unit, Hall sender, power assisted steering pressure switch, air mass meter

E9	Fresh air blower switch
E35	Air conditioner switch
F88	Power assisted steering pressure switch
G40	Hall sender
G70	Air mass meter
J293	Radiator fan control unit
J361	Simos control unit
SB1	Fuse -1- on fuse box
T5h	5-pin connector, brown, coupling station under relay carrier, left
T5m	5-pin connector, in engine compartment
T10e	10-pin connector, green, coupling station under relay carrier, left
T10t	10-pin connector, coupling station under relay carrier, left
T14	14-pin connector, in engine compartment
T14a	14-pin connector, in engine compartment
T14b	14-pin connector, on radiator fan control unit
T121	121-pin connector
D61	Connection (air conditioner), in engine compartment wiring harness
D80	Positive (+) connection (87a - for activated charcoal filter system solenoid valve), in engine compartment wiring harness
L5	Connection -1-, in air conditioner wiring harness
*	Only models with air conditioner

ws	=	white
sw	=	black
ro	=	red
br	=	brown
gn	=	green
bl	=	blue
gr	=	grey
li	=	purple
ge	=	yellow
or	=	orange
rs	=	pink

satelettronica

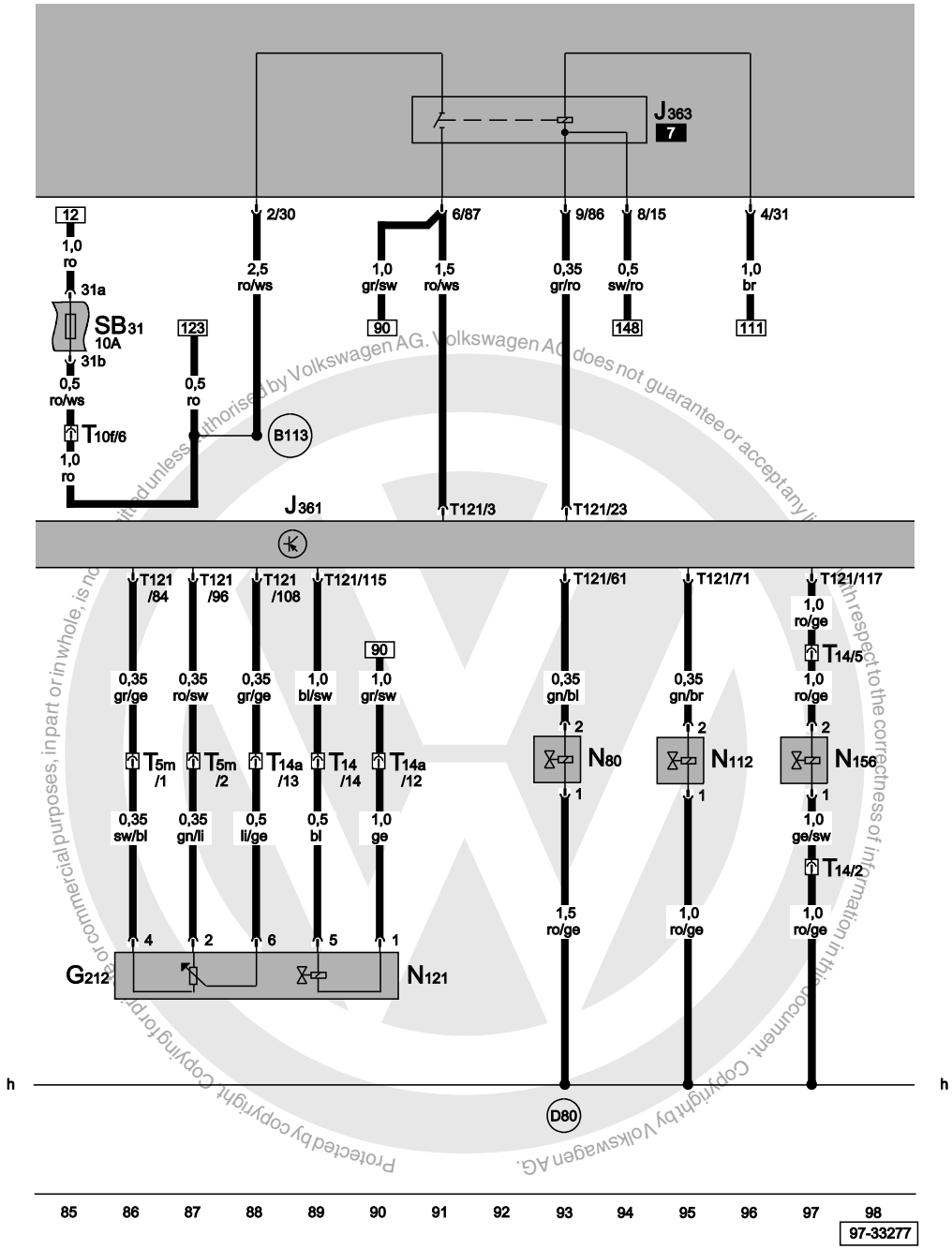

Exhaust gas recirculation potentiometer, exhaust gas recirculation frequency valve, activated charcoal filter system solenoid valve 1, secondary air inlet valve, Intake manifold change-over valve

G212	Exhaust gas recirculation potentiometer
J361	Simos control unit
J363	Current supply relay for Simos control unit
N80	Activated charcoal filter system solenoid valve 1 (pulsed)
N112	Secondary air inlet valve
N121	Exhaust gas recirculation frequency valve
N156	Intake manifold change-over valve
SB31	Fuse -31- on fuse box
T5m	5-pin connector
T10f	10-pin connector, purple, coupling station under relay carrier, left
T14	14-pin connector, in engine compartment
T14a	14-pin connector, in engine compartment
T121	121-pin connector
B113	Positive (+) connection (30a), in left interior wiring harness
D80	Positive (+) connection (87a - for activated charcoal filter system solenoid valve), in engine compartment wiring harness

ws	=	white
sw	=	black
ro	=	red
br	=	brown
gn	=	green
bl	=	blue
gr	=	grey
li	=	purple
ge	=	yellow
or	=	orange
rs	=	pink

satelettronica

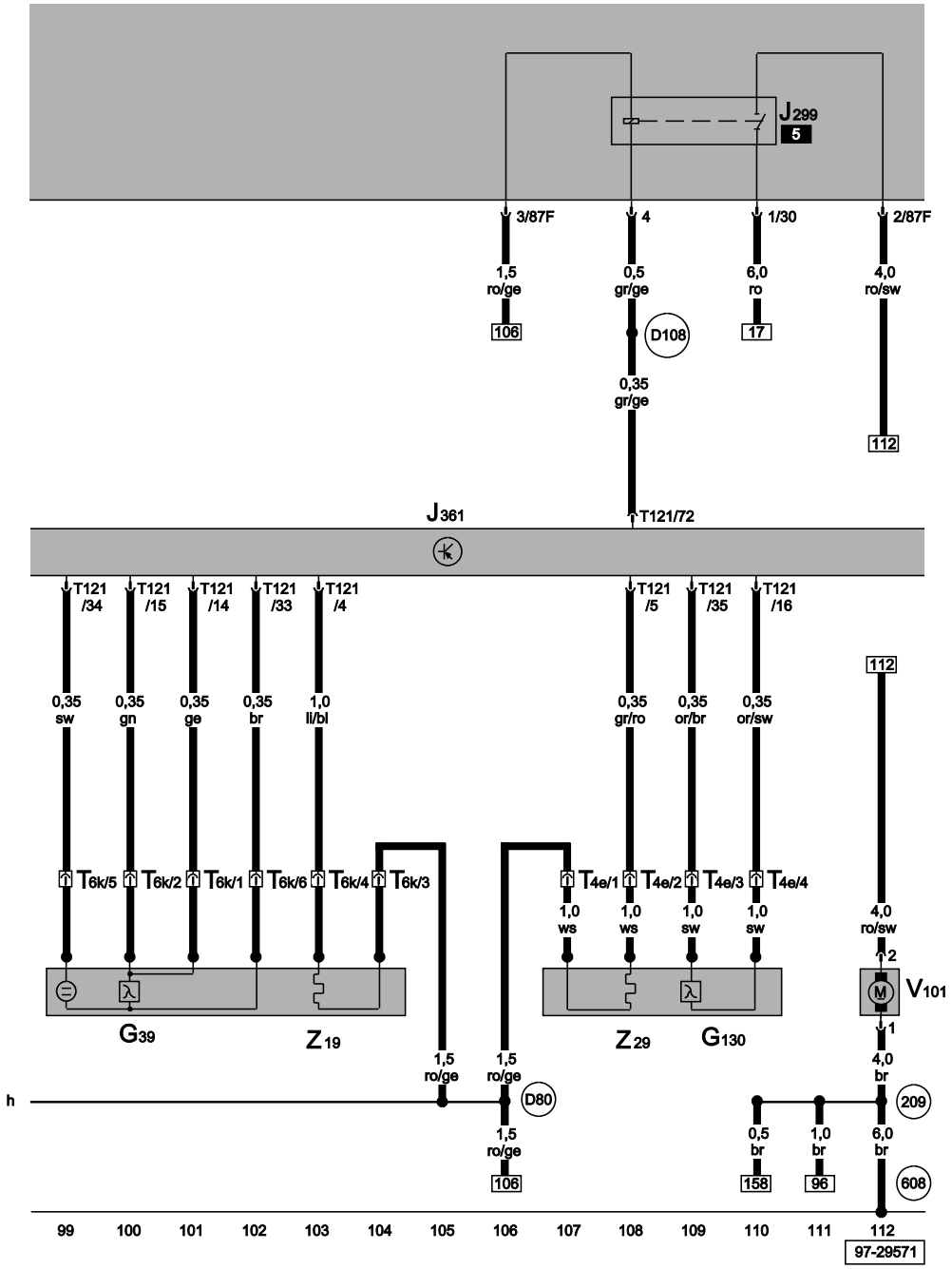

Simos control unit, lambda probe, lambda probe after catalyst, activated charcoal filter system solenoid valve 1, secondary air pump motor

G39	Lambda probe
G130	Lambda probe after catalyst
J299	Secondary air pump relay
J361	Simos control unit
T4e	4-pin connector, near lambda probe
T6k	6-pin connector, near lambda probe
T121	121-pin connector
V101	Secondary air pump motor
Z19	Lambda probe heater
Z29	Lambda probe 1 heater, after catalyst
209	Earth connection -6-, in engine compartment wiring harness
608	Earth point, in plenum chamber, centre
D80	Positive (+) connection (87a - for activated charcoal filter system solenoid valve), in engine compartment wiring harness
D108	Connection -6-, in engine compartment wiring harness

ws	=	white
sw	=	black
ro	=	red
br	=	brown
gn	=	green
bl	=	blue
gr	=	grey
li	=	purple
ge	=	yellow
or	=	orange
rs	=	pink

Protected by copyright. Copying for private or commercial purposes, in part or in whole, is not permitted unless authorised by Volkswagen AG. Volkswagen AG does not guarantee or accept any liability with respect to the correctness of information in this document. Copyright by Volkswagen AG.
satelettronica

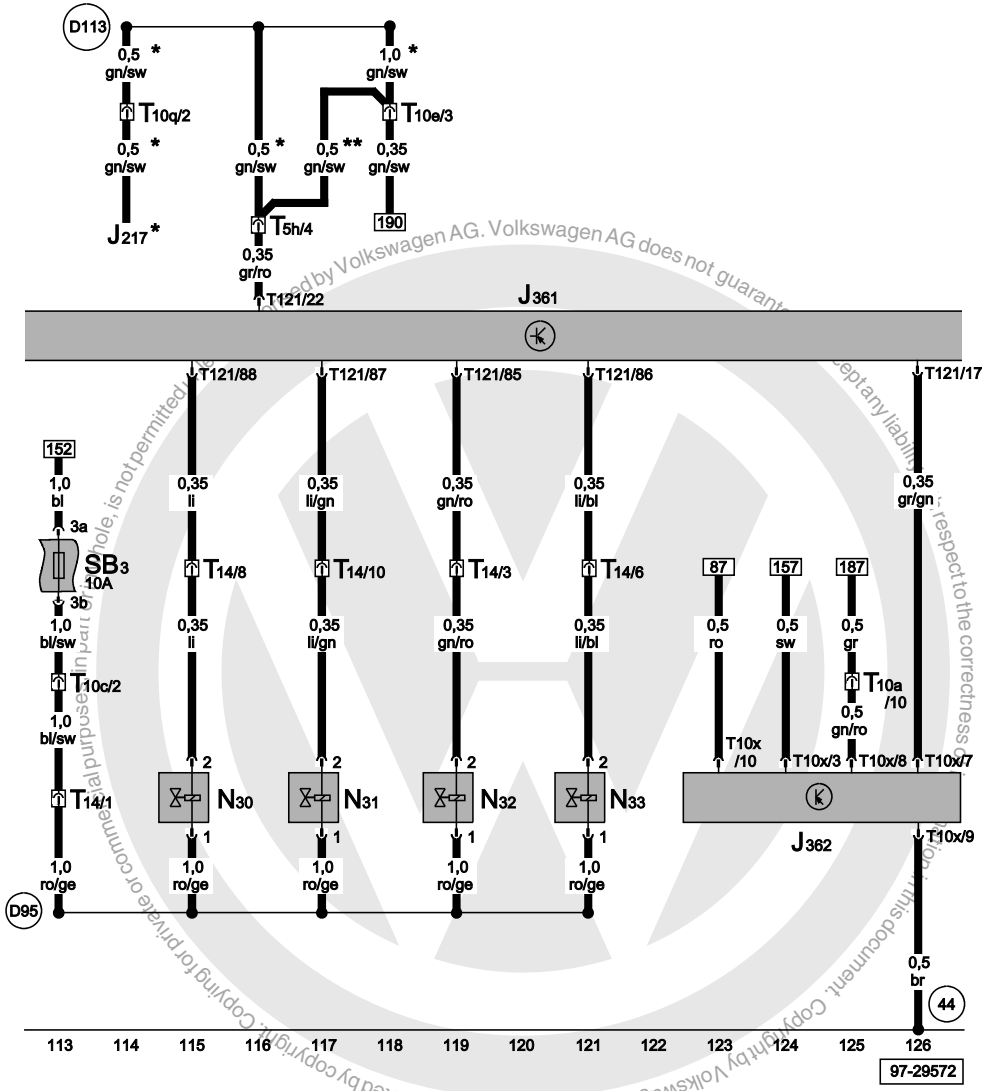

Simos control unit, injectors, immobilizer control unit

J217	Automatic gearbox control unit
J361	Simos control unit
J362	Immobilizer control unit
N30	Injector, cylinder 1
N31	Injector, cylinder 2
N32	Injector, cylinder 3
N33	Injector, cylinder 4
SB3	Fuse -3- on fuse box
T5h	5-pin connector, brown, coupling station under relay carrier, left
T10a	10-pin connector, black, coupling station under relay carrier, left
T10c	10-pin connector, brown, coupling station under relay carrier, left
T10e	10-pin connector, green, coupling station under relay carrier, left
T10q	10-pin connector, blue, coupling station under relay carrier, left
T10x	10-pin connector, on immobilizer control unit
T14	14-pin connector, in engine compartment
T121	121-pin connector
44	Earth point, lower part of left A-pillar
D95	Connection (injectors), in engine compartment wiring harness
D113	Connection -11-, in engine compartment wiring harness
*	Only models with automatic gearbox
**	Only models with manual gearbox

ws	=	white
sw	=	black
ro	=	red
br	=	brown
gn	=	green
bl	=	blue
gr	=	grey
li	=	purple
ge	=	yellow
or	=	orange
rs	=	pink

satelettronica

Simos control unit, brake pedal switch, brake light switch, clutch pedal switch

F	Brake light switch
F36	Clutch pedal switch
F63	Brake pedal switch
J104	ABS with EDL control unit
J361	Simos control unit
M9	Brake light bulb, left
M10	Brake light bulb, right
M25	High level brake light bulb
SB15	Fuse -15- on fuse box
SB24	Fuse -24- on fuse box
T10a	10-pin connector, black, coupling station under relay carrier, left
T10f	10-pin connector, purple, coupling station under relay carrier, left
T10g	10-pin connector, red, coupling station under relay carrier, left
T121	121-pin connector
D52	Positive (+) connection (15a), in engine compartment wiring harness
D73	Positive (+) connection (54), in engine compartment wiring harness
D106	Connection -4-, in engine compartment wiring harness
D109	Connection -7-, in engine compartment wiring harness

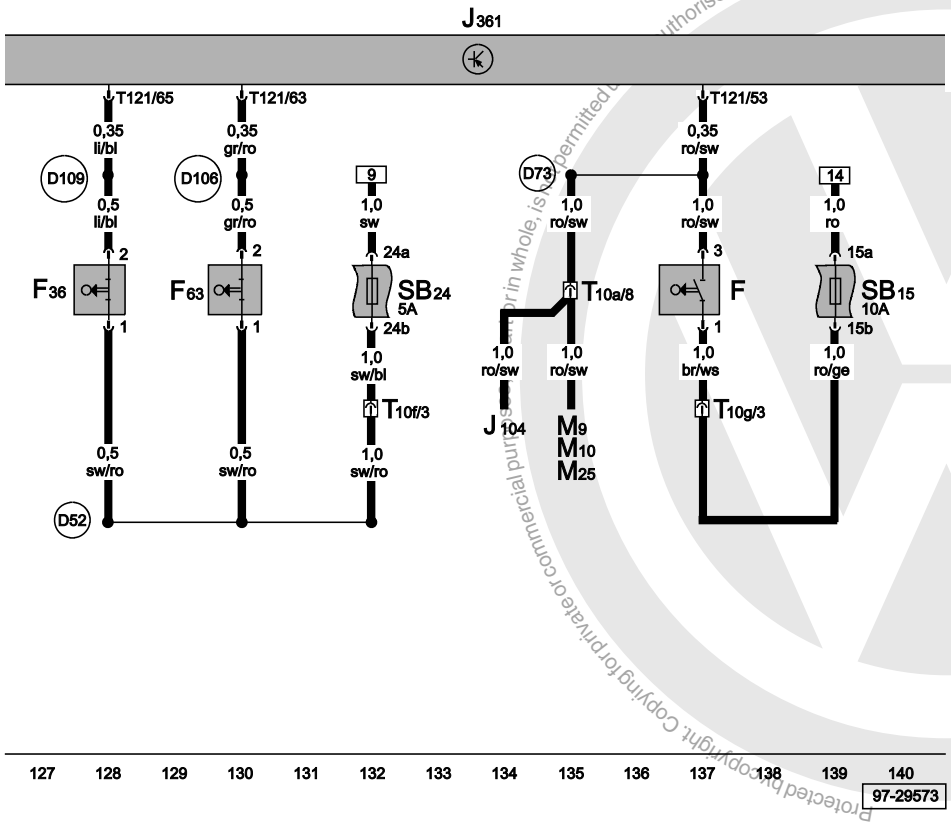

ws	=	white
sw	=	black
ro	=	red
br	=	brown
gn	=	green
bl	=	blue
gr	=	grey
li	=	purple
ge	=	yellow
or	=	orange
rs	=	pink

Protected by copyright. Copying for private or commercial purposes, in whole or in part, is not permitted unless authorised by Volkswagen AG. Volkswagen AG does not guarantee or accept any liability with respect to the correctness of information in this document. Copyright by Volkswagen AG.

satelettronica

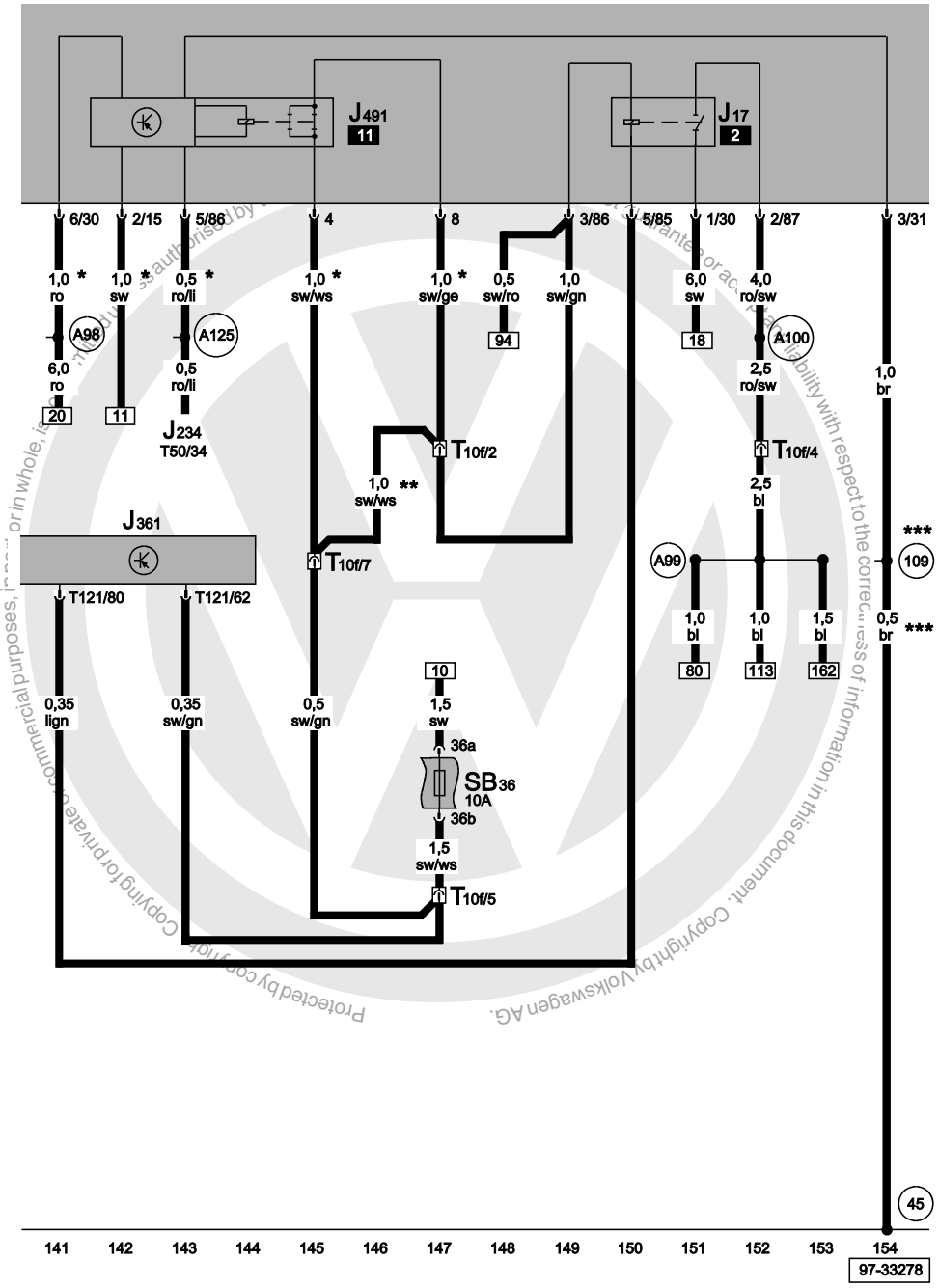

Simos control unit, fuel pump relay, fuel shut-off control unit (Crash)

J17	Fuel pump relay
J361	Simos control unit
J234	Airbag control unit
J491	Fuel shut-off control unit (crash)
SB36	Fuse -36- on fuse box
T10f	10-pin connector, purple, coupling station under relay carrier, left
T50	50-pin connector, on airbag control unit
T121	121-pin connector
45	Earth point, behind dash panel - centre
109	Earth connection, in airbag wiring harness
A98	Positive (+) connection -4- (30), in dash panel wiring harness
A99	Connection -1- (87), in dash panel wiring harness
A100	Connection -2- (87), in dash panel wiring harness
A125	Connection (crash signal), in dash panel wiring harness
*	Only models with airbags
**	Only models without airbags
***	Does not models with driver airbag

ws	=	white
sw	=	black
ro	=	red
br	=	brown
gn	=	green
bl	=	blue
gr	=	grey
li	=	purple
ge	=	yellow
or	=	orange
rs	=	pink

Protected by copyright. Copying for private or commercial purposes, in part or in whole, is not permitted unless authorised by Volkswagen AG. Volkswagen AG does not guarantee or accept any liability with respect to the correctness of information in this document. Copyright by Volkswagen AG.

satelettronica

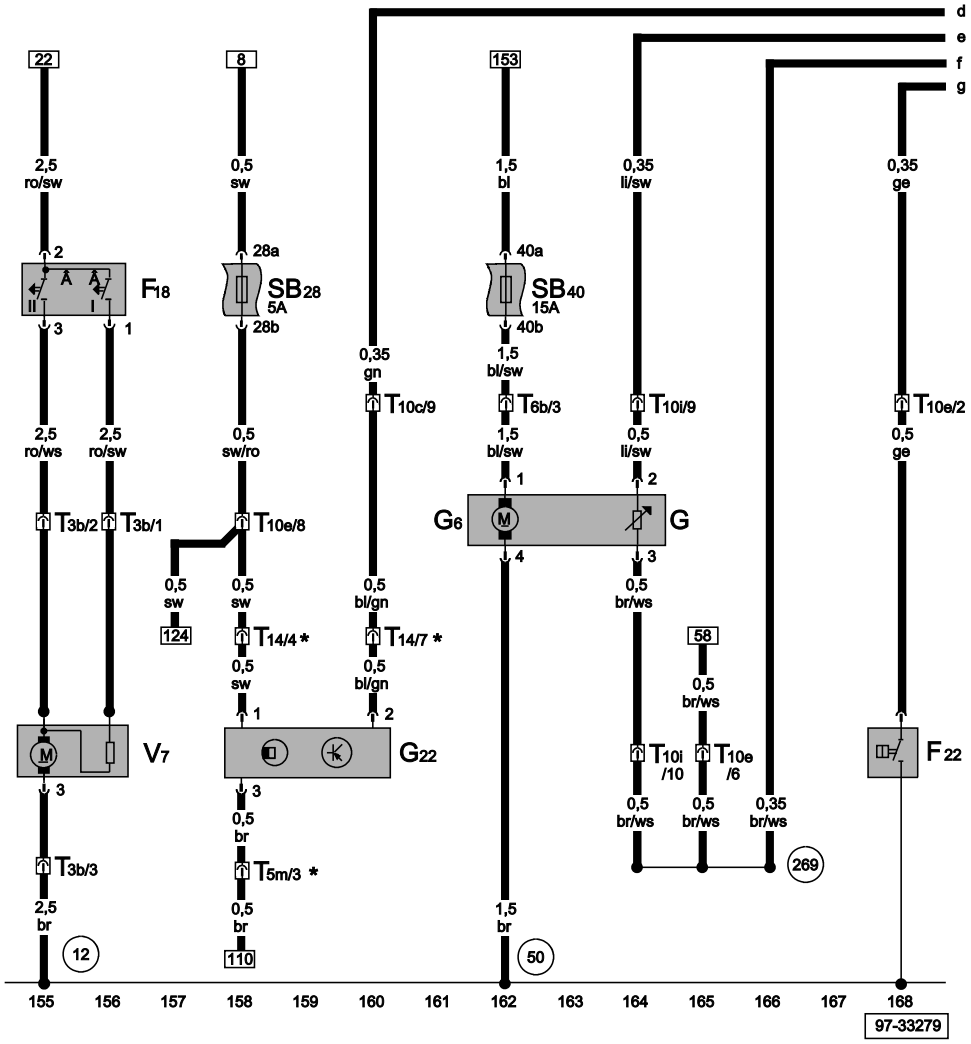

Oil pressure switch, fuel pump, speedometer sender, radiator fan, radiator fan thermo-switch, fuel gauge sender

F18	Radiator fan thermo-switch
F22	Oil pressure switch (0,3 bar)
G	Fuel gauge sender
G6	Fuel pump (pre-supply pump)
G22	Speedometer sender (Hall sender, on gearbox)
SB28	Fuse -28- on fuse box
SB40	Fuse -40- on fuse box
T3b	3-pin connector, on radiator fan
T5m	5-pin connector
T6b	6-pin connector, grey, coupling station under relay carrier, left
T10c	10-pin connector, brown, coupling station under relay carrier, left
T10e	10-pin connector, green, coupling station under relay carrier, left
T10i	10-pin connector, orange, coupling station under relay carrier, left
T14	14-pin connector, in engine compartment
V7	Radiator fan
12	Earth point, left in engine compartment
50	Earth point, on left luggage compartment
269	Earth connection (sender earth) -1-, in dash panel wiring harness
*	Only models with automatic gearbox

ws	=	white
sw	=	black
ro	=	red
br	=	brown
gn	=	green
bl	=	blue
gr	=	grey
li	=	purple
ge	=	yellow
or	=	orange
rs	=	pink

Protected by copyright. Copying for private or commercial purposes, in part or in whole, is not permitted unless authorised by Volkswagen AG. Volkswagen AG does not guarantee or accept any liability with respect to the correctness of information in this document. Copyright by Volkswagen AG.
satelettronica

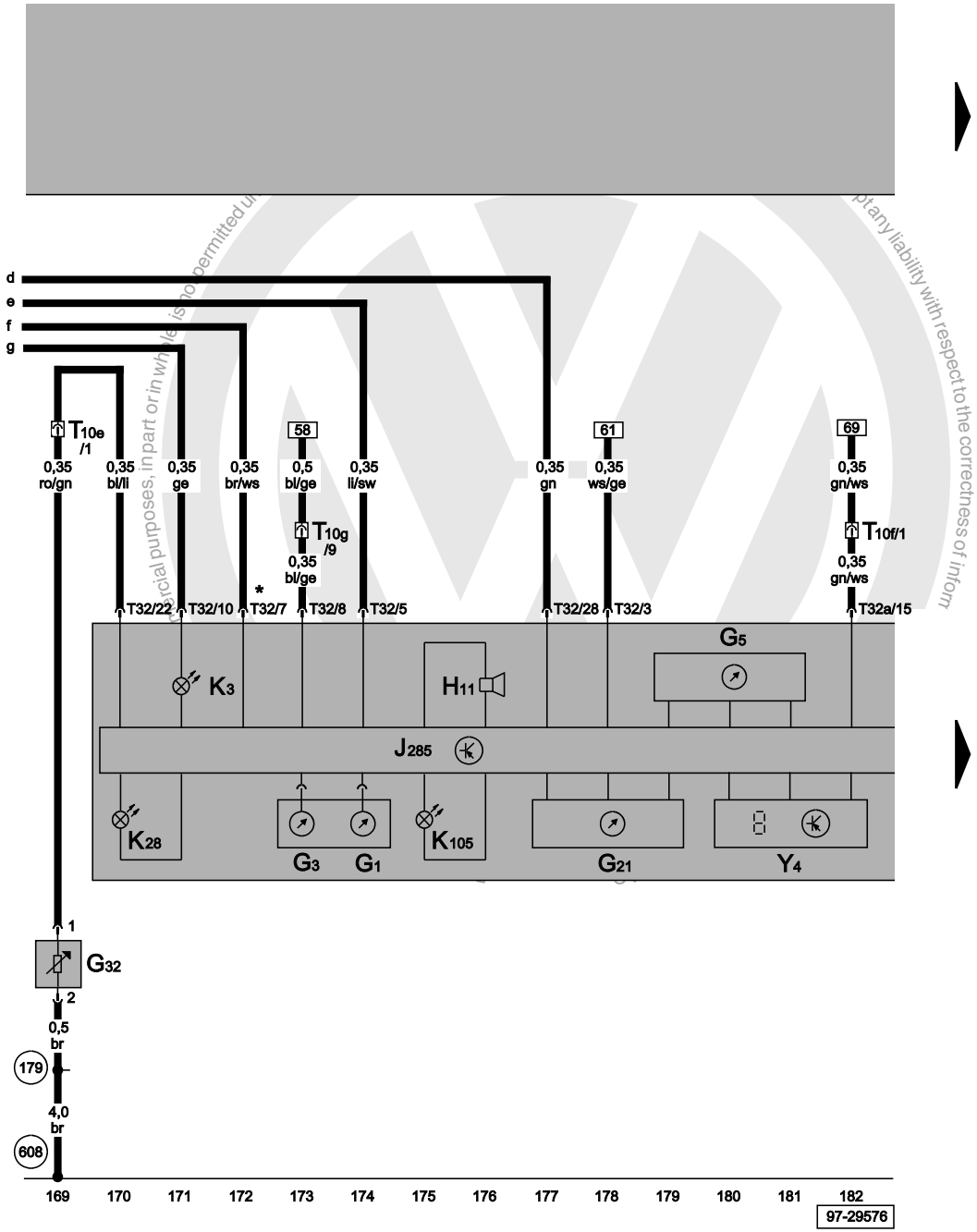

Control unit with display in dash panel insert, coolant shortage indicator sender, oil pressure warning lamp, rev. counter, speedometer, odometer display

G1	Fuel gauge
G3	Coolant temperature gauge
G5	Rev. counter
G21	Speedometer
G32	Coolant shortage indicator sender
H11	Oil pressure warning buzzer
J285	Control unit with display in dash panel insert
K3	Oil pressure warning lamp
K28	Coolant temperature/coolant shortage warning lamp
K105	Reserve fuel warning lamp
T10e	10-pin connector, green, coupling station under relay carrier, left
T10f	10-pin connector, purple, coupling station under relay carrier, left
T10g	10-pin connector, red, coupling station under relay carrier, left
T32	32-pin connector, blue, on dash panel insert
T32a	32-pin connector, green, on dash panel insert
Y4	Odometer display
179	Earth connection, in left headlight wiring harness
608	Earth point, in centre of plenum chamber
*	Output for signal earth

ws	=	white
sw	=	black
ro	=	red
br	=	brown
gn	=	green
bl	=	blue
gr	=	grey
li	=	purple
ge	=	yellow
or	=	orange
rs	=	pink

satelettronica

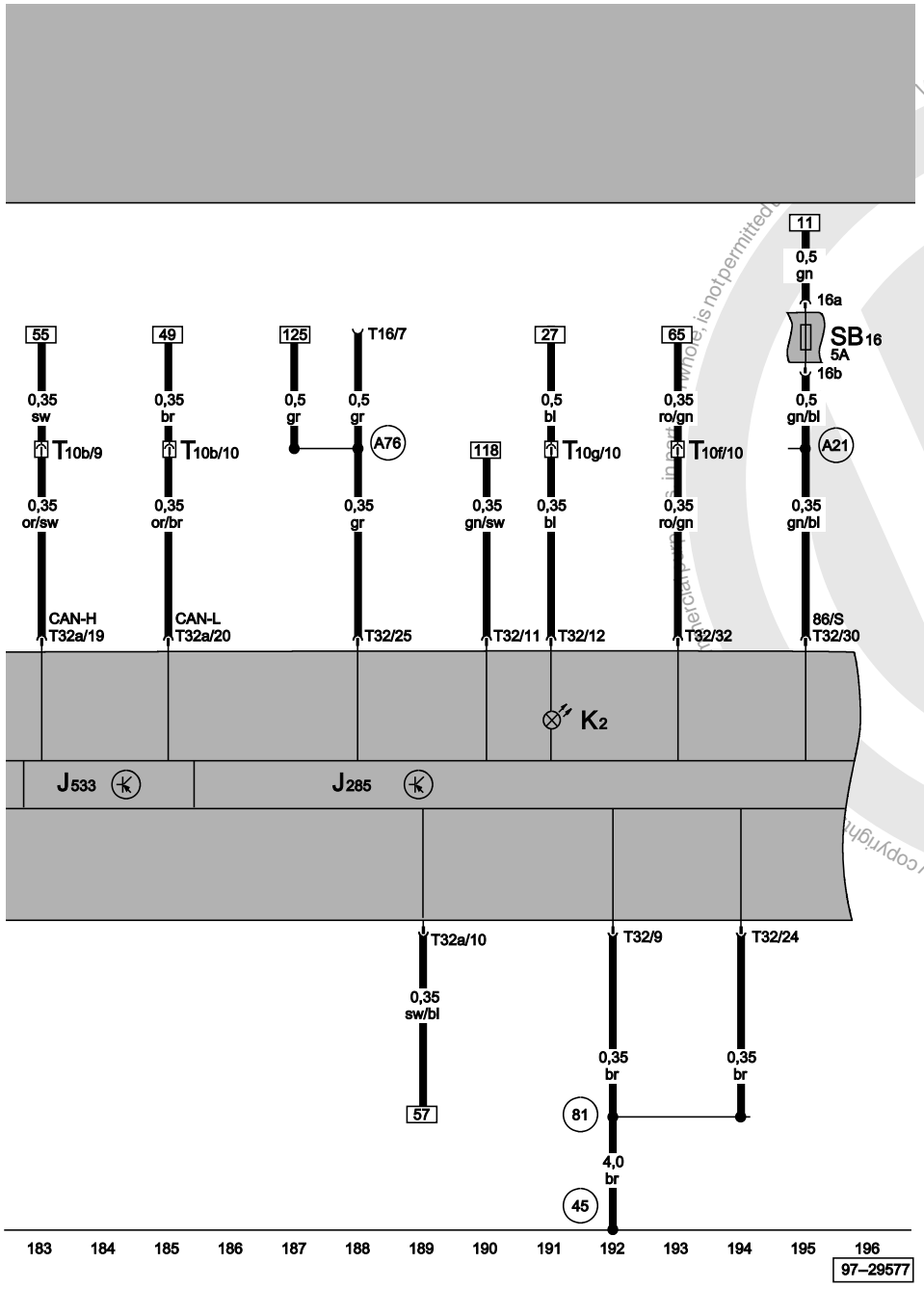

Control unit with display in dash panel insert, diagnostic connector, alternator warning lamp, data bus diagnostic interface

J285	Control unit with display in dash panel insert
J533	Data bus diagnostic interface
K2	Alternator warning lamp
SB16	Fuse -16- on fuse box
T10b	10-pin connector, white, coupling station under relay carrier, left
T10f	10-pin connector, purple, coupling station under relay carrier, left
T10g	10-pin connector, red, coupling station under relay carrier, left
T16	16-pin connector, diagnostic connector
T32	32-pin connector, blue, on dash panel insert
T32a	32-pin connector, green, on dash panel insert
45	Earth point, behind dash panel - centre
81	Earth connection -1-, in dash panel wiring harness
A21	Connection (86s), in dash panel wiring harness
A76	Connection (diagnosis wire K), in dash panel wiring harness

ws	=	white
sw	=	black
ro	=	red
br	=	brown
gn	=	green
bl	=	blue
gr	=	grey
li	=	purple
ge	=	yellow
or	=	orange
rs	=	pink

Protected by copyright. Copyright by Volkswagen AG. Volkswagen AG does not guarantee or accept any liability with respect to the correctness of information in this document. Copyright by Volkswagen AG. Commercial use, in part or whole, is not permitted.

satelettronica

1.4 l/55 kW - 4LV, engine codes APE, AUA

From October 1999

1.4 l/55 kW - 4LV, engine codes AUA, From October 1999

For alternatives to relay and fuse positions as well as multi-pin connector wiring - see "Fitting locations" section.

Relay locations on relay plate:

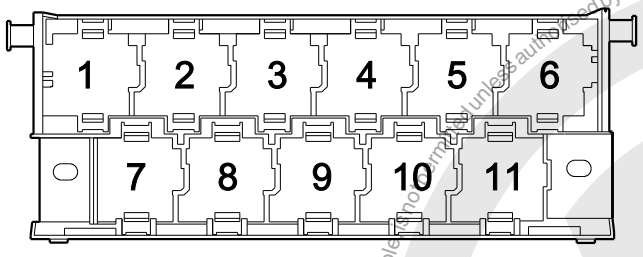

97-22850

2 - Fuel pump relay (167)
11 - Fuel shut- off control unit (405)

Note:

- *The number in brackets behind the part designation denotes the control number on the housing.*

Fuse colours

30 A - green
25 A - white
20 A - yellow
15 A - blue
10 A - red
7.5 A - brown
5 A - beige
3 A - purple

Protected by copyright. Copying for private or commercial purposes, in part or in whole, is not permitted unless authorised by Volkswagen AG. Volkswagen AG does not guarantee or accept any liability with respect to the correctness of information in this document. Copyright by Volkswagen AG.

satelettronica

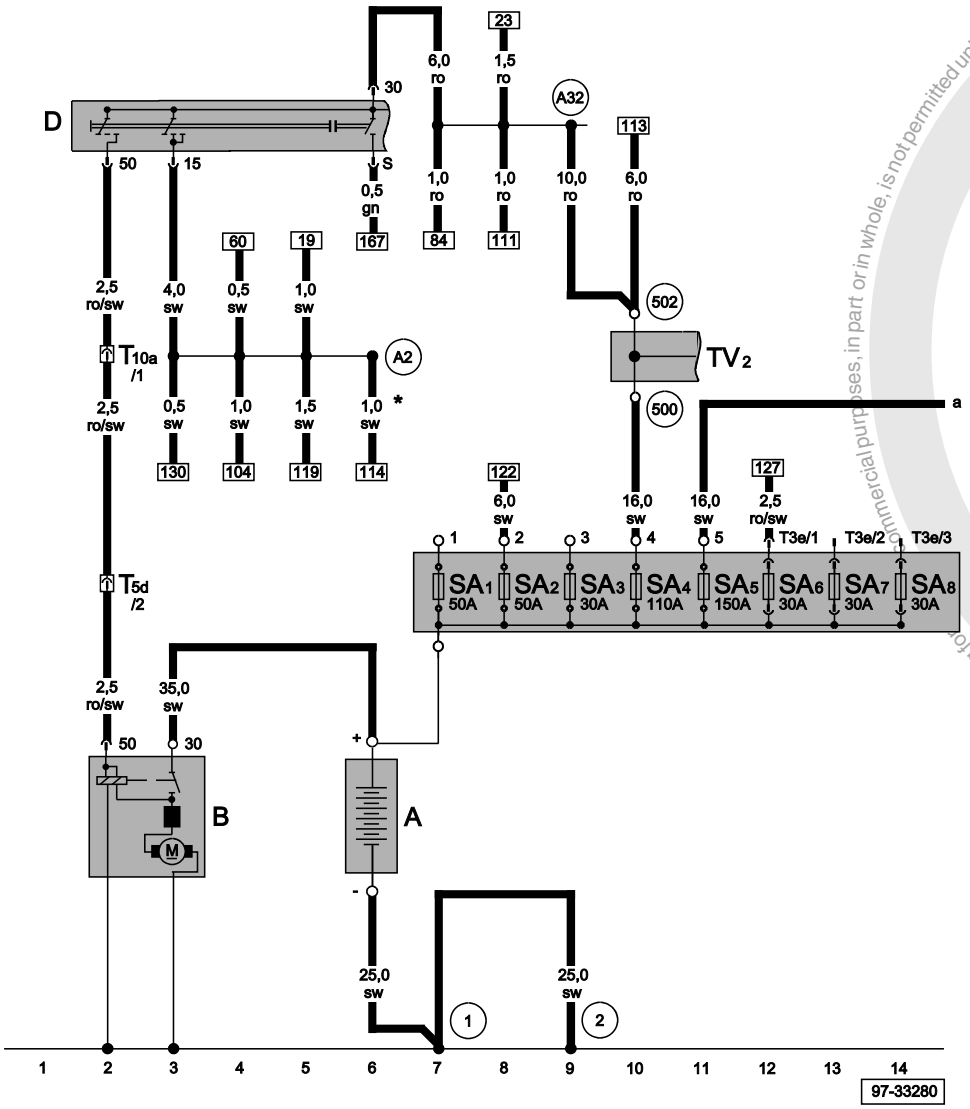

Starter, battery, ignition/starter switch, fuse box / battery

A	Battery
B	Starter
D	Ignition/starter switch
SA1	Fuse -1- on battery fuse box
SA2	Fuse -2- on battery fuse box
SA3	Fuse -3- on battery fuse box
SA4	Fuse -4- on battery fuse box
SA5	Fuse -5- on battery fuse box
SA6	Fuse -6- on battery fuse box
SA7	Fuse -7- on battery fuse box
SA8	Fuse -8- on battery fuse box
T3e	3-pin connector, on battery fuse box
T5d	5-pin connector, in engine compartment, near gearbox
T10a	10-pin connector, black, coupling station under relay carrier, left
TV2	Terminal 30 wiring junction
1	Earth strap, battery - body
2	Earth strap, gearbox - body
500	Screw connection -1- (30), on relay plate
502	Screw connection -1- (30a), on relay plate
A2	Positive (+) connection (15), in dash panel wiring harness
A32	Positive (+) connection (30), in dash panel wiring harness
*	Only models with airbags

ws	=	white
sw	=	black
ro	=	red
br	=	brown
gn	=	green
bl	=	blue
gr	=	grey
li	=	purple
ge	=	yellow
or	=	orange
rs	=	pink

Protected by copyright. Copying for commercial purposes, in part or in whole, is not permitted unless authorised by Volkswagen AG. Volkswagen AG does not guarantee or accept any liability with respect to the correctness of information in this document. Copyright by Volkswagen AG.

satelettronica

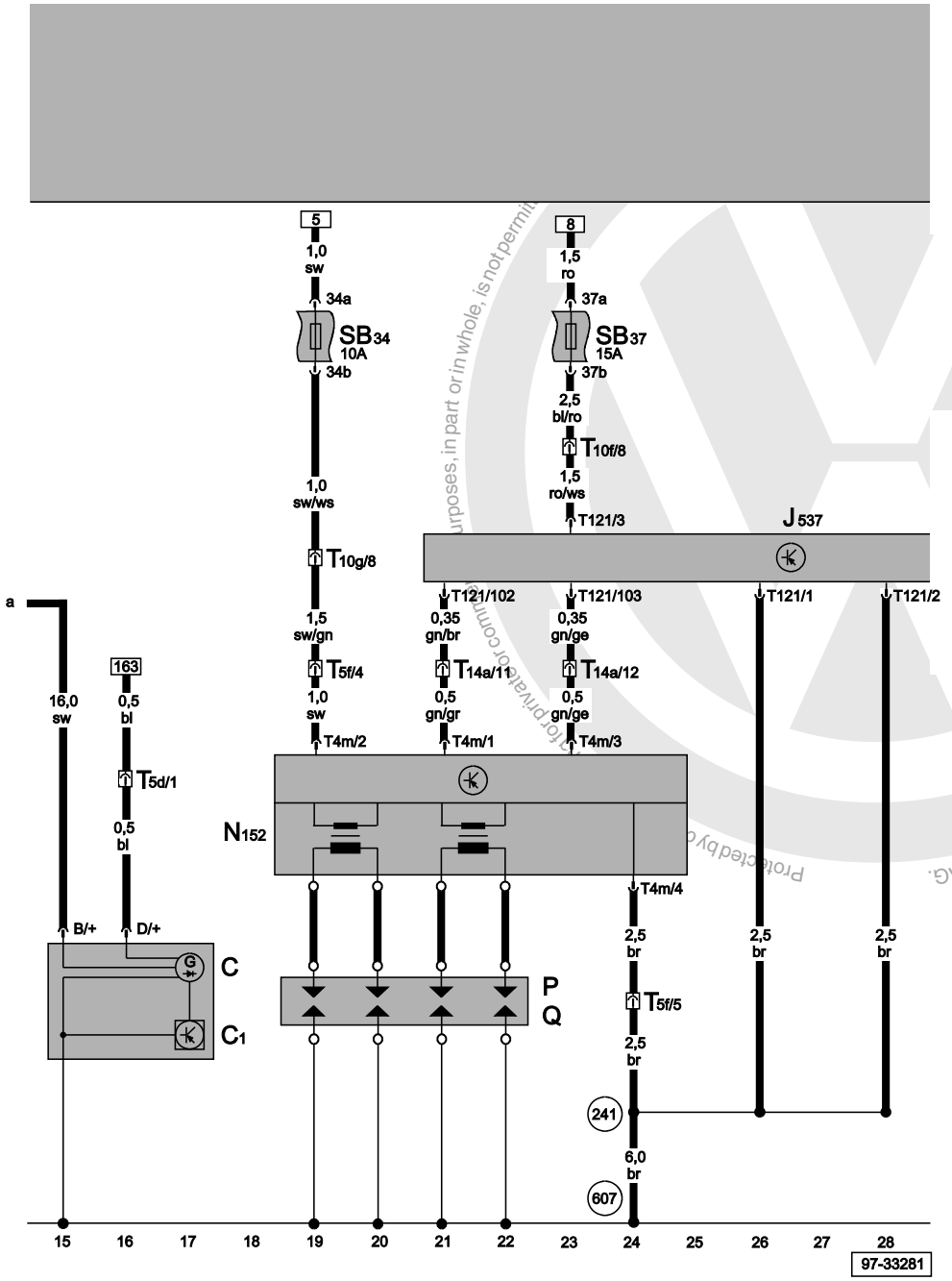

4LV control unit (injection system), alternator, voltage regulator, voltage supply, ignition transformer

C	Alternator
C1	Voltage regulator
J537	4LV control unit (injection system)
N152	Ignition transformer
P	Spark plug connector
Q	Spark plugs
SB34	Fuse -34- on fuse box
SB37	Fuse -37- on fuse box
T4m	4-pin connector, yellow, on ignition transformer
T5d	5-pin connector, in engine compartment, near gearbox
T5f	5-pin connector, in engine compartment
T10f	10-pin connector, purple, coupling station under relay carrier, left
T10g	10-pin connector, red, coupling station under relay carrier, left
T14a	14-pin connector, in engine compartment
T121	121-pin connector
241	Earth connection -2-, engine earth, in engine wiring harness
607	Earth point, on left in plenum chamber

ws	=	white
sw	=	black
ro	=	red
br	=	brown
gn	=	green
bl	=	blue
gr	=	grey
li	=	purple
ge	=	yellow
or	=	orange
rs	=	pink

Protected by copyright. Copyright by Volkswagen AG. does not guarantee or accept any liability with respect to the correctness of information in this document. Copyright by Volkswagen AG. for private or commercial purposes, in part or in whole, is not permitted.
satelettronica

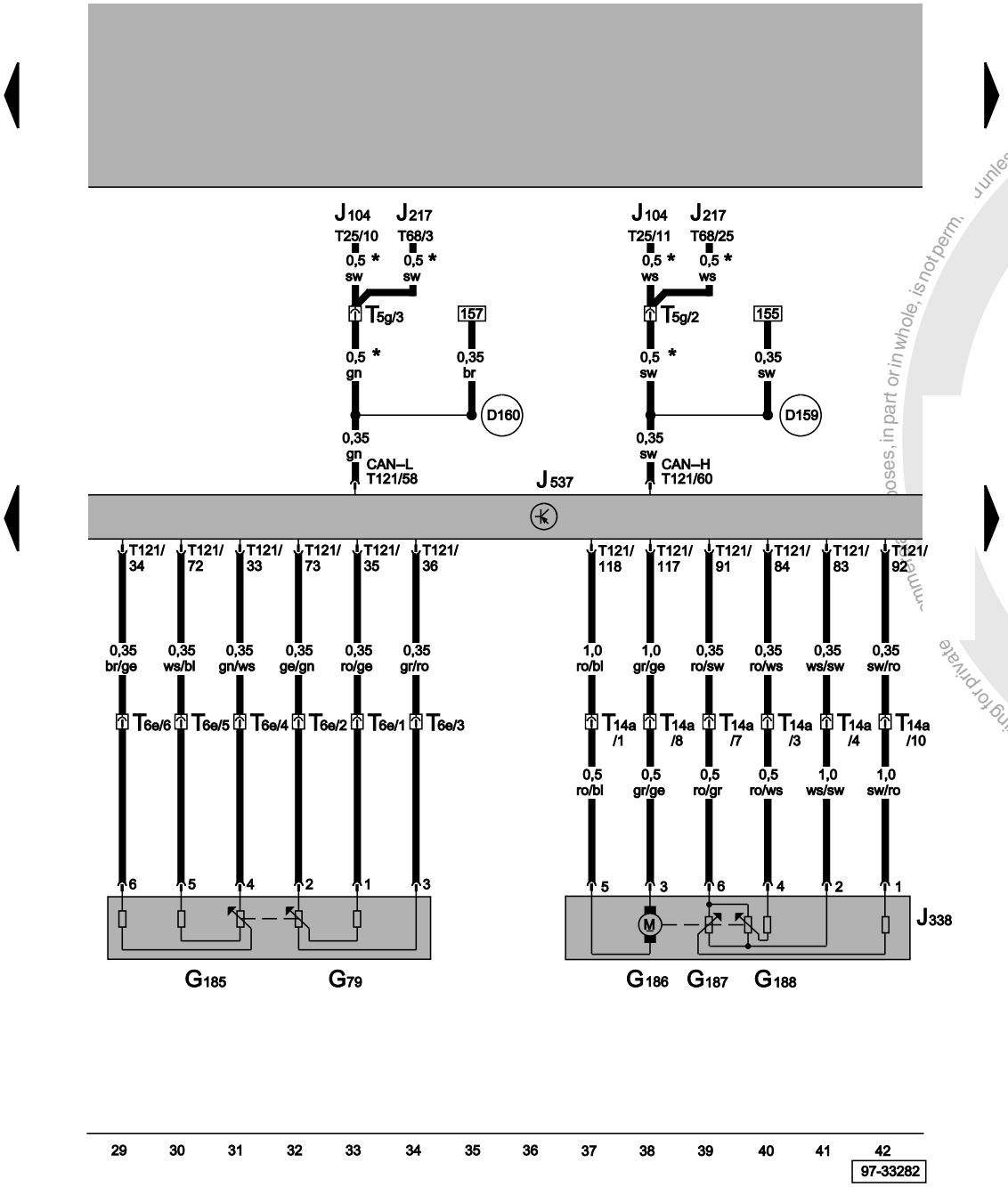

4LV control unit (injection system), accelerator pedal position senders, throttle valve control unit

G79	Accelerator pedal position sender
G185	Accelerator pedal position sender -2-
G186	Throttle valve drive (electric throttle operation)
G187	Throttle valve drive angle sender -1- (electric throttle operation)
G188	Throttle valve drive angle sender -2- (electric throttle operation)
J104	ABS with EDL control unit
J217	Automatic gearbox control unit
J338	Throttle valve control unit
J537	4LV control unit (injection system)
T5g	5-pin connector, pink, coupling station under relay carrier, left
T6e	6-pin connector, near accelerator pedal position sender
T14a	14-pin connector, in engine compartment
T25	25-pin connector
T68	68-pin connector
T121	121-pin connector
D159	Connection (high bus), in interior wiring harness
D160	Connection (low bus), in engine compartment wiring harness
*	Depends on equipment

ws	=	white
sw	=	black
ro	=	red
br	=	brown
gn	=	green
bl	=	blue
gr	=	grey
li	=	purple
ge	=	yellow
or	=	orange
rs	=	pink

Protected by copyright. Copying for private or commercial purposes, in part or in whole, is not perm. unless authorised by Volkswagen AG. Volkswagen AG does not guarantee or accept any liability with respect to the correctness of information in this document. Copyright by Volkswagen AG.
satelettronica

authorised by Volkswagen AG. Volkswagen AG does not guarantee or accept any liability with respect to the correctness of information in this document. Copyright by Volkswagen AG.

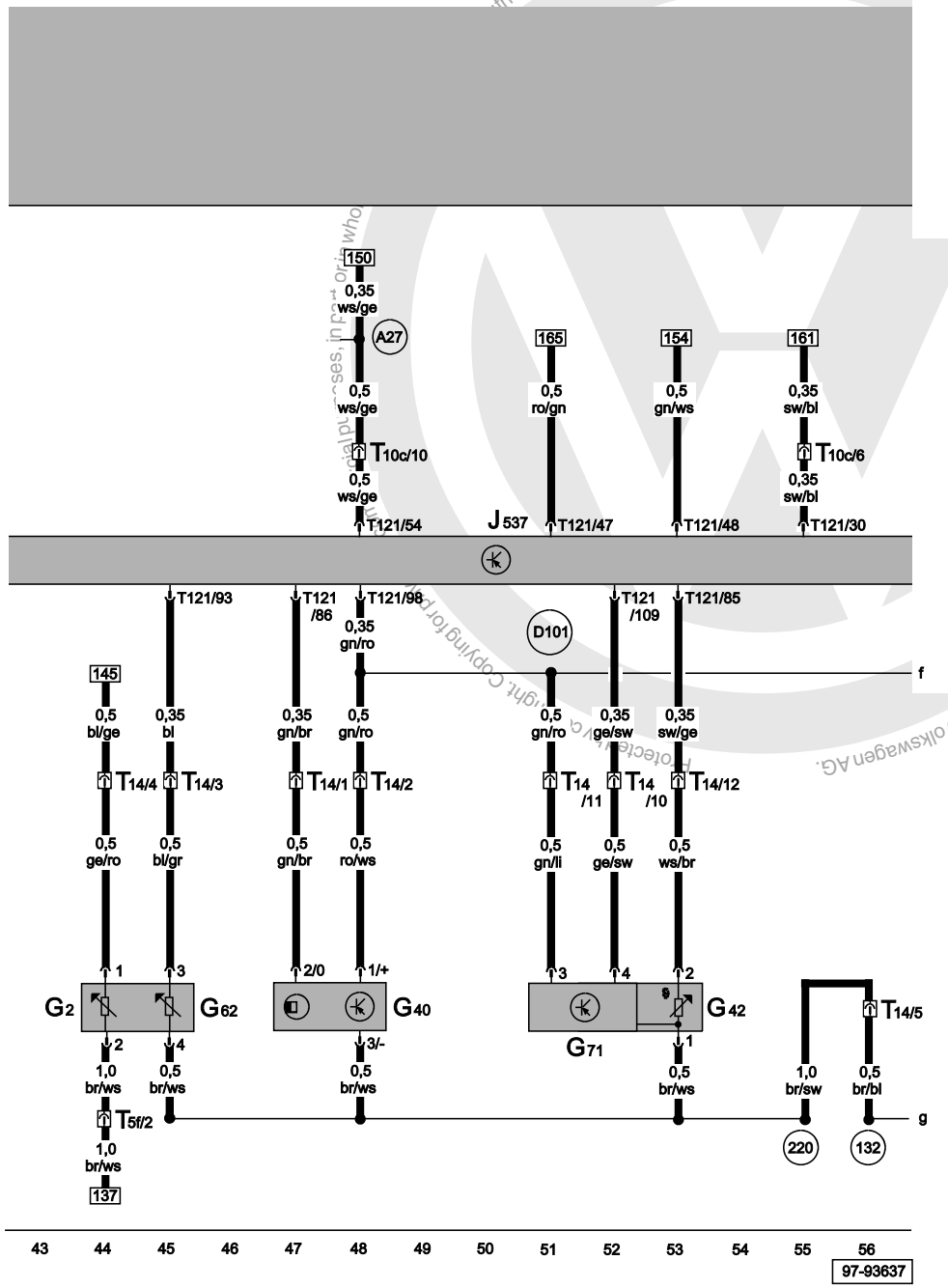

4LV control unit (injection system), coolant temperature sender, intake air temperature sender, intake manifold pressure sender, Hall sender

G2	Coolant temperature sender
G40	Hall sender
G42	Intake air temperature sender
G62	Coolant temperature sender
G71	Intake manifold pressure sender
J537	4LV control unit (injection system)
T5f	5-pin connector, in engine compartment
T10c	10-pin connector, brown, coupling station under relay carrier, left
T14	14-pin connector, in engine compartment
T121	121-pin connector
132	Earth connection -3-, in engine compartment wiring harness
220	Earth connection (sender earth), in engine wiring harness
A27	Connection (speed signal), in dash panel wiring harness
D101	Connection -1-, in engine compartment wiring harness

ws	=	white
sw	=	black
ro	=	red
br	=	brown
gn	=	green
bl	=	blue
gr	=	grey
li	=	purple
ge	=	yellow
or	=	orange
rs	=	pink

satelettronica

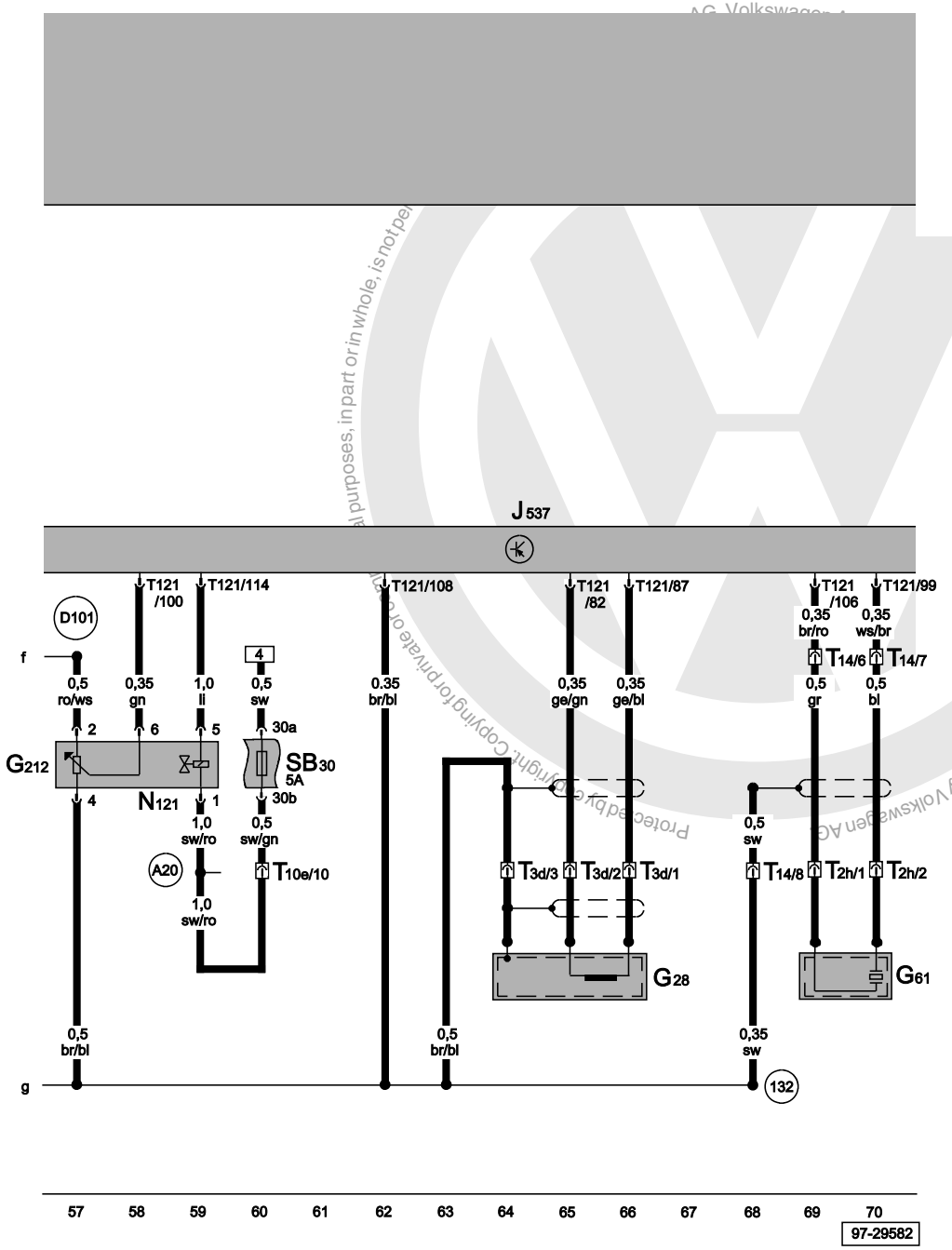

4LV control unit (injection system), engine speed sender, knock sensor I, exhaust gas recirculation frequency valve

G28	Engine speed sender
G61	Knock sensor I
G212	Exhaust gas recirculation potentiometer
J537	4LV control unit (injection system)
N121	Exhaust gas recirculation frequency valve
SB30	Fuse -30- on fuse box
T2h	2-pin connector, near knock sensor I
T3d	3-pin connector, near engine speed sender
T10e	10-pin connector, green, coupling station under relay carrier, left
T14	14-pin connector, in engine compartment
T121	121-pin connector
132	Earth connection -3-, in engine compartment wiring harness
A20	Connection (15a), in dash panel wiring harness
D101	Connection -1-, in engine compartment wiring harness

ws	=	white
sw	=	black
ro	=	red
br	=	brown
gn	=	green
bl	=	blue
gr	=	grey
li	=	purple
ge	=	yellow
or	=	orange
rs	=	pink

satelettronica

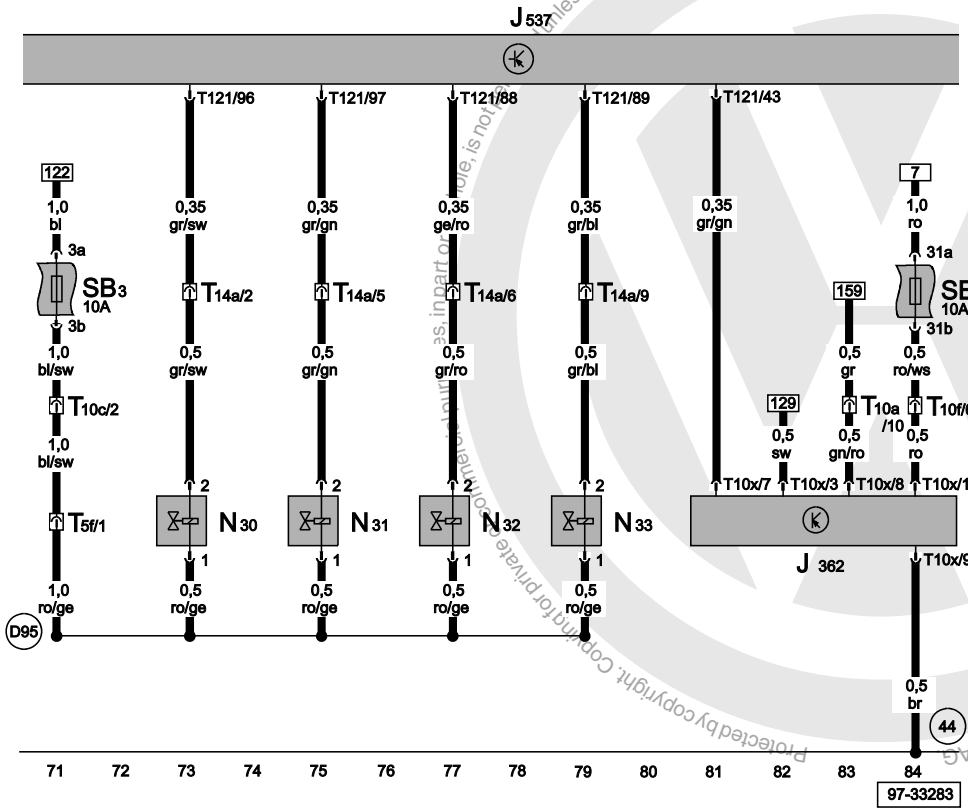

4LV control unit (injection system), injectors, immobilizer control unit

J362	Immobilizer control unit
J537	4LV control unit (injection system)
N30	Injector, cylinder 1
N31	Injector, cylinder 2
N32	Injector, cylinder 3
N33	Injector, cylinder 4
SB3	Fuse -3- on fuse box
SB31	Fuse -31- on fuse box
T5f	5-pin connector, in engine compartment
T10a	10-pin connector, black, coupling station under relay carrier, left
T10c	10-pin connector, brown, coupling station under relay carrier, left
T10f	10-pin connector, purple, coupling station under relay carrier, left
T10x	10-pin connector, on immobilizer control unit
T14a	14-pin connector, in engine compartment
T121	121-pin connector
44	Earth point, lower part of left A-pillar
D95	Connection (injectors), in engine compartment wiring harness

ws	=	white
sw	=	black
ro	=	red
br	=	brown
gn	=	green
bl	=	blue
gr	=	grey
li	=	purple
ge	=	yellow
or	=	orange
rs	=	pink

Protected by copyright. Copying for private or commercial purposes, in part or in whole, is not permitted unless authorised by Volkswagen AG. Volkswagen AG does not guarantee or accept any liability with respect to the correctness of information in this document. Copyright by Volkswagen AG

satelettronica

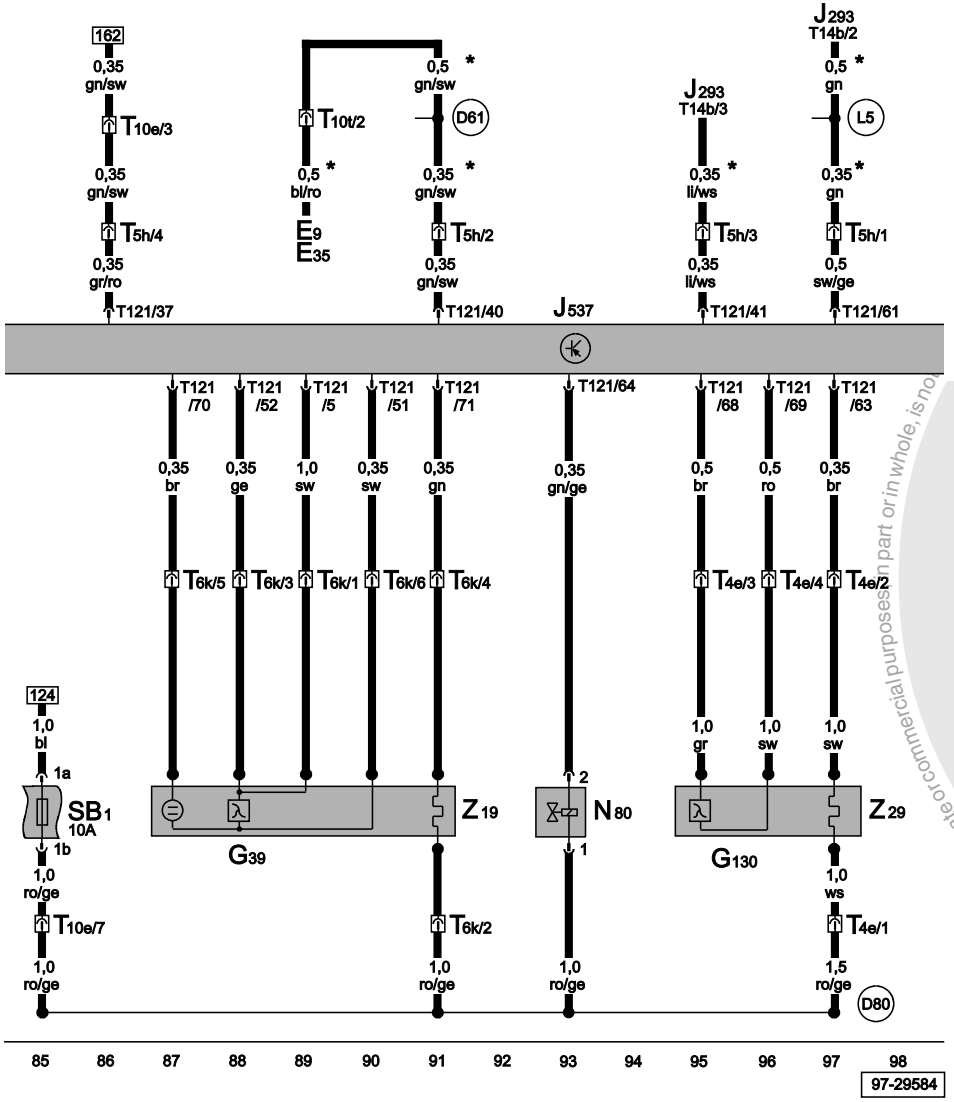

4LV control unit (injection system), lambda probe, lambda probe after catalyst, activated charcoal filter system solenoid valve 1

E9	Fresh air blower switch
E35	Air conditioner switch
G39	Lambda probe
G130	Lambda probe after catalyst
J293	Radiator fan control unit
J537	4LV control unit (injection system)
N80	Activated charcoal filter system solenoid valve 1 (pulsed)
SB1	Fuse -1- on fuse box
T4e	4-pin connector, near lambda probe
T5h	5-pin connector, brown, coupling station under relay carrier, left
T6k	6-pin connector, near lambda probe
T10e	10-pin connector, green, coupling station under relay carrier, left
T10t	10-pin connector, coupling station under relay carrier, left
T14b	14-pin connector, on radiator fan control unit
T121	121-pin connector
Z19	Lambda probe heater
Z29	Lambda probe 1 heater, after catalyst
D61	Connection (air conditioner), in engine compartment wiring harness
D80	Positive (+) connection (87a - for activated charcoal filter system solenoid valve), in engine compartment wiring harness
L5	Connection -1-, in air conditioner wiring harness
*	Only models with air conditioner

ws	=	white
sw	=	black
ro	=	red
br	=	brown
gn	=	green
bl	=	blue
gr	=	grey
li	=	purple
ge	=	yellow
or	=	orange
rs	=	pink

Protected by copyright. Copying for private or commercial purposes, in part or in whole, is not permitted unless authorised by Volkswagen AG. Volkswagen AG does not guarantee or accept any liability with respect to the correctness of information in this document. Copyright by Volkswagen AG.

satelettronica

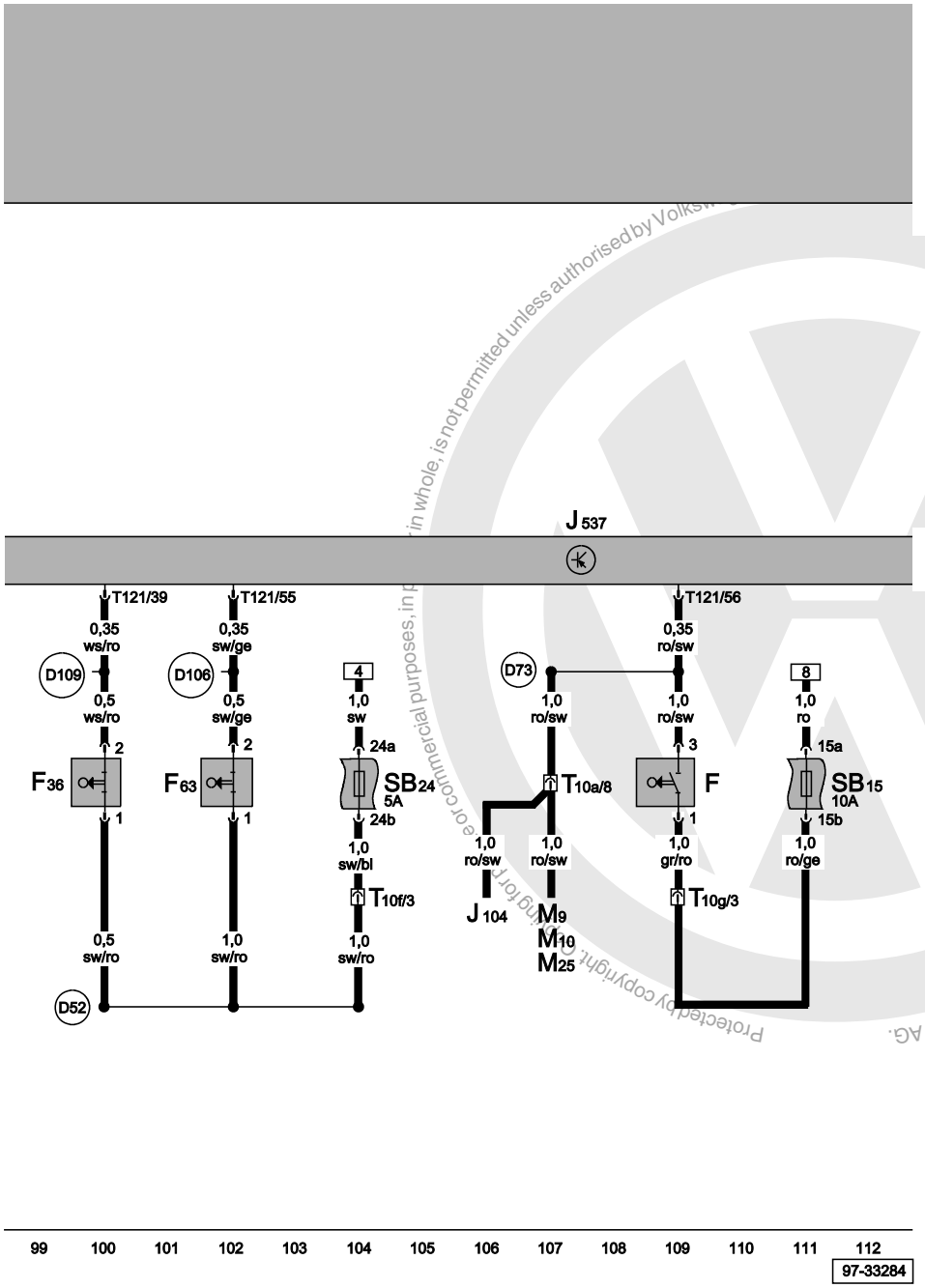

4LV control unit (injection system), brake light switch, clutch pedal switch, brake pedal switch

F	Brake light switch
F36	Clutch pedal switch
F63	Brake pedal switch
J104	ABS with EDL control unit
J537	4LV control unit (injection system)
M9	Brake light bulb, left
M10	Brake light bulb, right
M25	High level brake light bulb
SB15	Fuse -15- on fuse box
SB24	Fuse -24- on fuse box
T10a	10-pin connector, black, coupling station under relay carrier, left
T10f	10-pin connector, purple, coupling station under relay carrier, left
T10g	10-pin connector, red, coupling station under relay carrier, left
T121	121-pin connector
D52	Positive (+) connection (15a), in engine compartment wiring harness
D73	Positive (+) connection (54), in engine compartment wiring harness
D106	Connection -4-, in engine compartment wiring harness
D109	Connection -7-, in engine compartment wiring harness

ws	=	white
sw	=	black
ro	=	red
br	=	brown
gn	=	green
bl	=	blue
gr	=	grey
li	=	purple
ge	=	yellow
or	=	orange
rs	=	pink

Protected by copyright. Copying for private or commercial purposes, in whole, is not permitted unless authorised by Volkswagen AG. Volkswagen AG does not guarantee or accept any liability with respect to the correctness of information in this document. Copyright by Volkswagen AG.
satelettronica

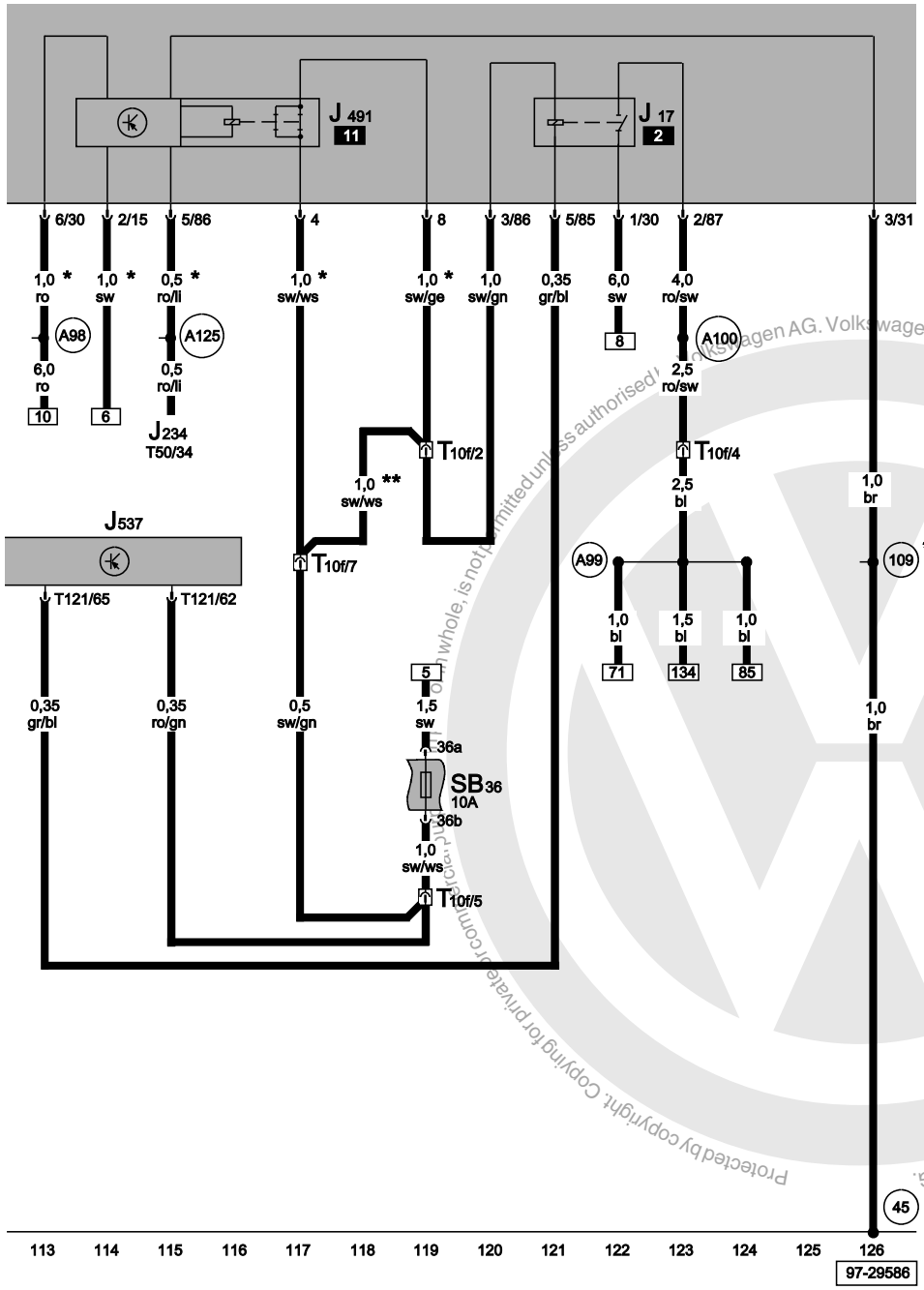

4LV control unit (injection system), fuel pump relay, fuel shut-off control unit (crash)

J17	Fuel pump relay
J234	Airbag control unit
J491	Fuel shut-off control unit (crash)
J537	4LV control unit (injection system)
SB36	Fuse -36- on fuse box
T10f	10-pin connector, purple, coupling station under relay carrier, left
T50	50-pin connector, on airbag control unit
T121	121-pin connector, on Motronic control unit
45	Earth point, behind dash panel - centre
109	Earth connection, in airbag wiring harness
A98	Positive (+) connection -4- (30), in dash panel wiring harness
A99	Connection -1- (87), in dash panel wiring harness
A100	Connection -2- (87), in dash panel wiring harness
A125	Connection (crash signal), in dash panel wiring harness
*	Only models with airbag
**	Only models without airbag
***	Does not apply to models with driver airbag , without window lifter

ws	=	white
sw	=	black
ro	=	red
br	=	brown
gn	=	green
bl	=	blue
gr	=	grey
li	=	purple
ge	=	yellow
or	=	orange
rs	=	pink

Protected by copyright. Copying for private or commercial purposes, in whole or in part, is not permitted unless authorised by Volkswagen AG. Volkswagen AG does not guarantee or accept any liability with respect to the correctness of information in this document. Copyright by Volkswagen AG.

satelettronica

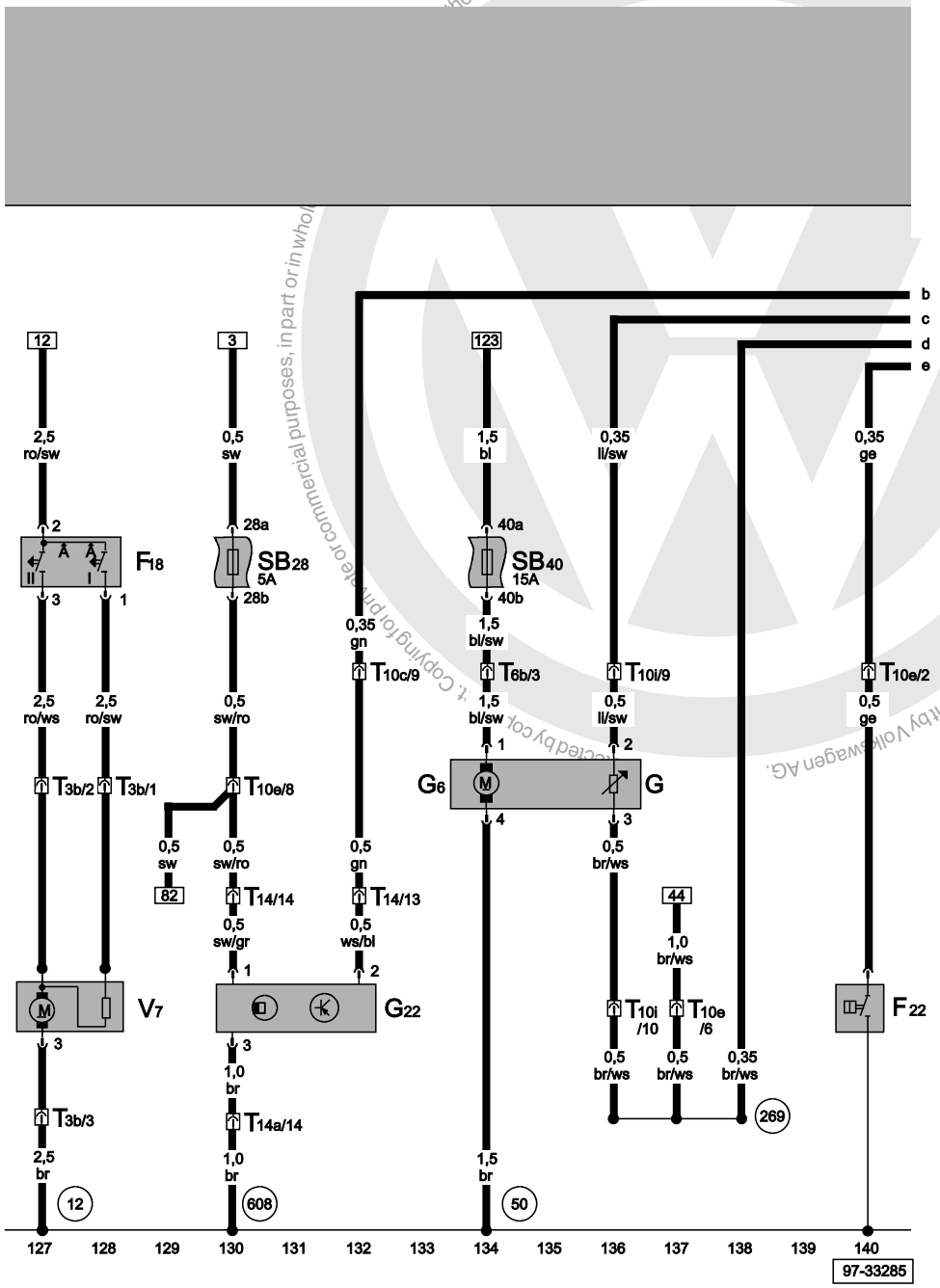

ws = white
sw = black
ro = red
br = brown
gn = green
bl = blue
gr = grey
li = purple
ge = yellow
or = orange
rs = pink

Oil pressure switch, fuel pump, speedometer sender, radiator fan thermo-switch, radiator fan, fuel gauge sender

F18	Radiator fan thermo-switch
F22	Oil pressure switch (0,3 bar)
G	Fuel gauge sender
G6	Fuel pump (pre-supply pump)
G22	Speedometer sender (Hall sender, on gearbox)
SB28	Fuse -28- on fuse box
SB40	Fuse -40- on fuse box
T3b	3-pin connector, on radiator fan
T6b	6-pin connector, grey, coupling station under relay carrier, left
T10c	10-pin connector, brown, coupling station under relay carrier, left
T10e	10-pin connector, green, coupling station under relay carrier, left
T10i	10-pin connector, orange, coupling station under relay carrier, left
T14	14-pin connector, in engine compartment
T14a	14-pin connector, in engine compartment
V7	Radiator fan
12	Earth point, left in engine compartment
50	Earth point, on left luggage compartment
269	Earth connection (sender earth) -1-, in dash panel wiring harness
608	Earth point, in centre of plenum chamber

satelettronica

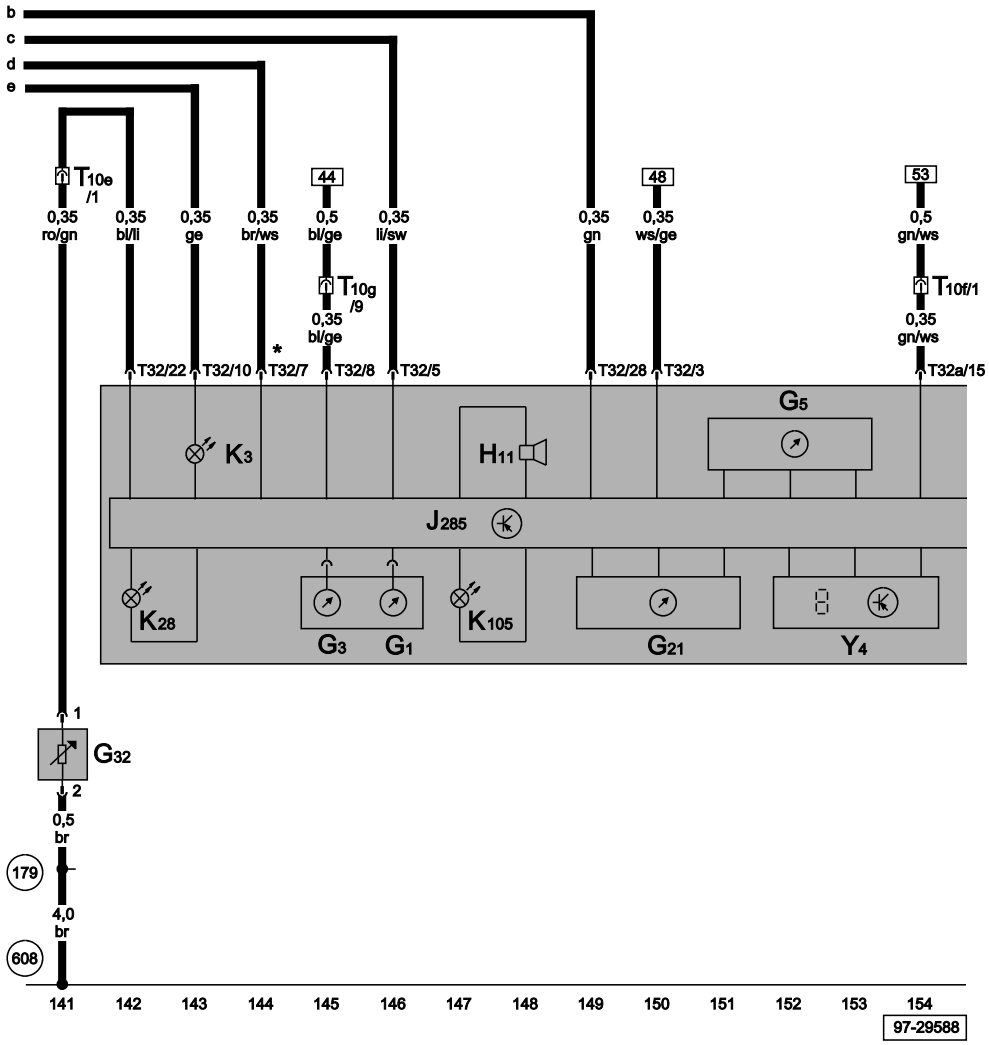

Control unit with display in dash panel insert, coolant shortage indicator sender, oil pressure warning lamp, speedometer, odometer display

G1	Fuel gauge
G3	Coolant temperature gauge
G5	Rev. counter
G21	Speedometer
G32	Coolant shortage indicator sender
H11	Oil pressure warning buzzer
J285	Control unit with display in dash panel insert
K3	Oil pressure warning lamp
K28	Coolant temperature/coolant shortage warning lamp
K105	Reserve fuel warning lamp
T10e	10-pin connector, green, coupling station under relay carrier, left
T10f	10-pin connector, purple, coupling station under relay carrier, left
T10g	10-pin connector, red, coupling station under relay carrier, left
T32	32-pin connector, blue, on dash panel insert
T32a	32-pin connector, green, on dash panel insert
Y4	Odometer display
179	Earth connection, in left headlight wiring harness
608	Earth point, in centre of plenum chamber
*	Output for signal earth

ws	=	white
sw	=	black
ro	=	red
br	=	brown
gn	=	green
bl	=	blue
gr	=	grey
li	=	purple
ge	=	yellow
or	=	orange
rs	=	pink

Protected by copyright. Copying for private or commercial purposes, in part or in whole, is not permitted unless authorised by Volkswagen AG. Volkswagen AG does not guarantee or accept any liability with respect to the correctness of information in this document. Copyright by Volkswagen AG.
satelettronica

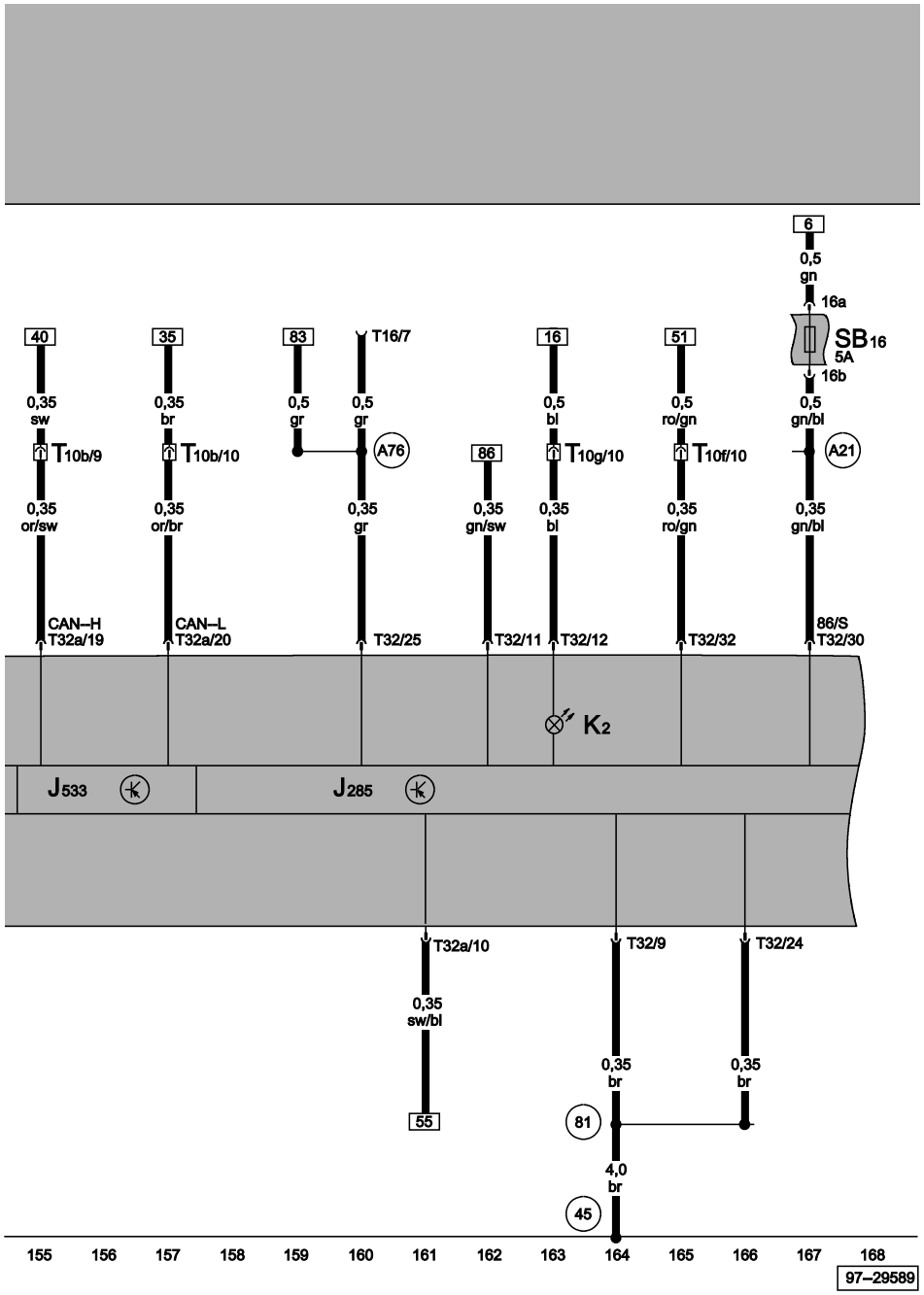

Control unit with display in dash panel insert, diagnostic connector, alternator warning lamp, data bus diagnostic interface

J285	Control unit with display in dash panel insert
J533	Data bus diagnostic interface
K2	Alternator warning lamp
SB16	Fuse -16- on fuse box
T10b	10-pin connector, white, coupling station under relay carrier, left
T10f	10-pin connector, purple, coupling station under relay carrier, left
T10g	10-pin connector, red, coupling station under relay carrier, left
T16	16-pin connector, diagnostic connector
T32	32-pin connector, blue, on dash panel insert
T32a	32-pin connector, green, on dash panel insert
45	Earth point, behind dash panel - centre
81	Earth connection -1-, in dash panel wiring harness
A21	Connection (86s), in dash panel wiring harness
A76	Connection (diagnosis wire K), in dash panel wiring harness

ws	=	white
sw	=	black
ro	=	red
br	=	brown
gn	=	green
bl	=	blue
gr	=	grey
li = purple
ge = yellow
or = orange
rs = pink

Protected by copyright. Copying for private or commercial purposes, in part or in whole, is not permitted unless authorised by Volkswagen AG. Volkswagen AG does not guarantee or accept any liability with respect to the correctness of information in this document. Copyright by Volkswagen AG.
satelettronica

1.4 l/44 kW Motronic, engine codes AUD

From May 2000

For alternatives to relay and fuse positions as well as multi-pin connector wiring - see "Fitting locations" section.

Relay locations on relay plate:

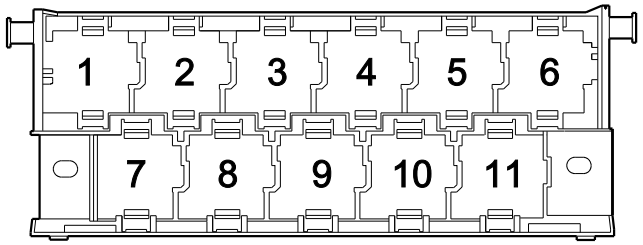

97-22850

2 - Fuel pump relay (167)
11 - Fuel shut- off control unit (405)

Note:

- *The number in brackets behind the part designation denotes the control number on the housing.*

Fuse colours

30 A - green
25 A - white
20 A - yellow
15 A - blue
10 A - red
7.5 A - brown
5 A - beige
3 A - purple

Protected by copyright. Copying for private or commercial purposes, in part or in whole, is not permitted unless authorised by Volkswagen AG. Volkswagen AG does not guarantee or accept any liability with respect to the correctness of information in this document. Copyright by Volkswagen AG.
satelettronica

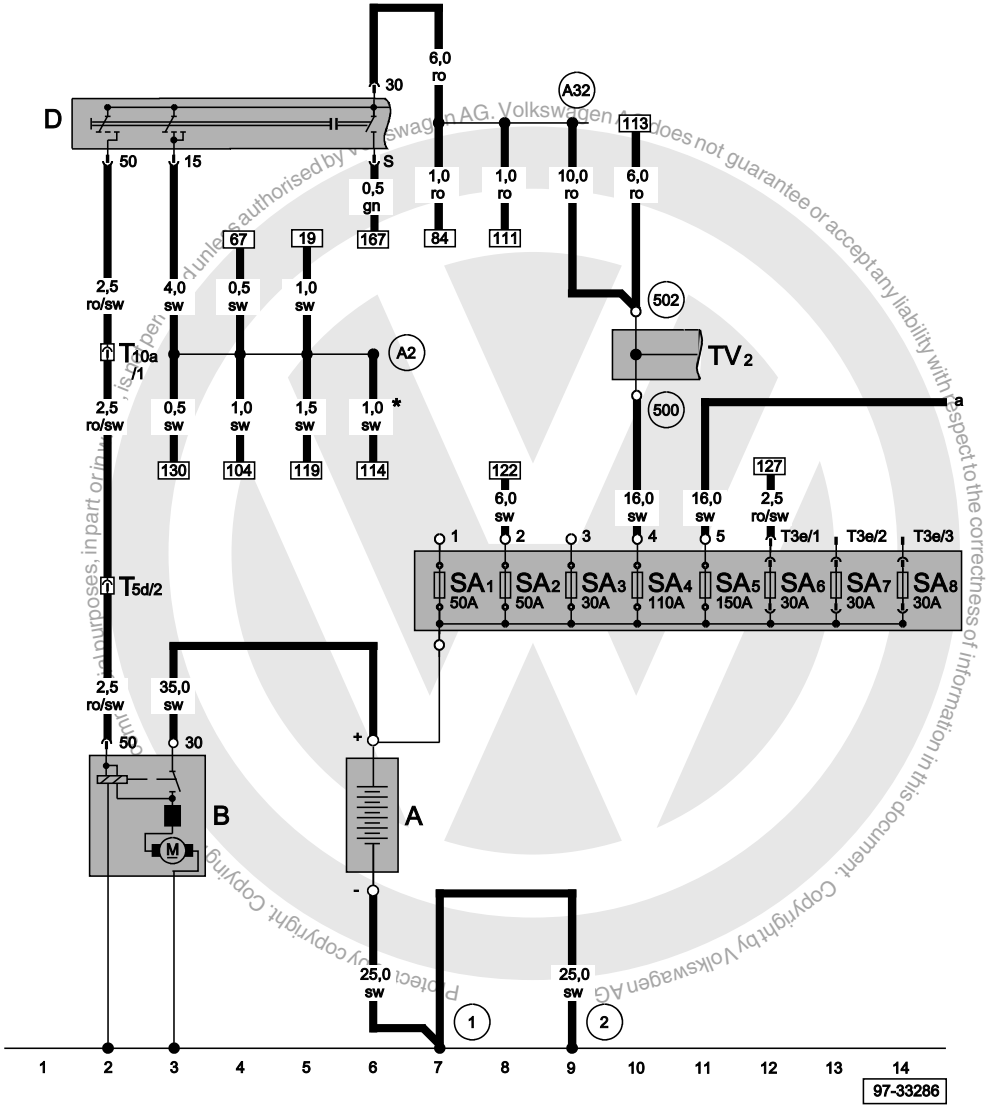

Starter, battery, ignition/starter switch, fuse box / battery

A	Battery
B	Starter
D	Ignition/starter switch
SA1	Fuse -1- on battery fuse box
SA2	Fuse -2- on battery fuse box
SA3	Fuse -3- on battery fuse box
SA4	Fuse -4- on battery fuse box
SA5	Fuse -5- on battery fuse box
SA6	Fuse -6- on battery fuse box
SA7	Fuse -7- on battery fuse box
SA8	Fuse -8- on battery fuse box
T3e	3-pin connector, on battery fuse box
T5d	5-pin connector, in engine compartment, near gearbox
T10a	10-pin connector, black, coupling station under relay carrier, left
TV2	Terminal 30 wiring junction
1	Earth strap, battery - body
2	Earth strap, gearbox - body
500	Screw connection -1- (30), on relay plate
502	Screw connection -1- (30a), on relay plate
A2	Positive (+) connection (15), in dash panel wiring harness
A32	Positive (+) connection (30), in dash panel wiring harness
*	Only models with airbag

ws	=	white
sw	=	black
ro	=	red
br	=	brown
gn	=	green
bl	=	blue
gr	=	grey
li	=	purple
ge	=	yellow
or	=	orange
rs	=	pink

satelettronica

Motronic control unit, alternator, ignition transformer

C	Alternator
C1	Voltage regulator
J220	Motronic control unit
N152	Ignition transformer
P	Spark plug connector
Q	Spark plugs
SB34	Fuse -34- on fuse box
T4m	4-pin connector, yellow, on ignition transformer
T5d	5-pin connector, in engine compartment, near gearbox
T10g	10-pin connector, red, coupling station under relay carrier, left
T80	80-pin connector
241	Earth connection -2-, engine earth, in engine wiring harness
607	Earth point, on left in plenum chamber

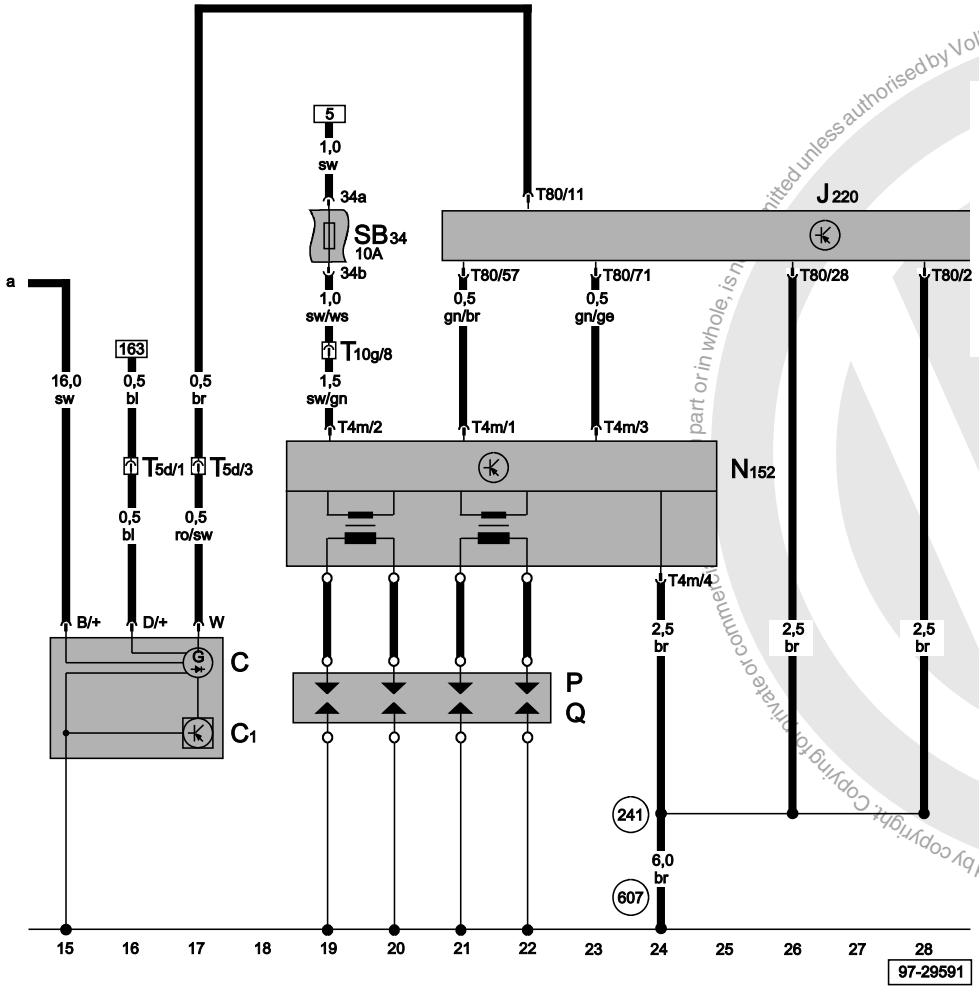

ws	=	white
sw	=	black
ro	=	red
br	=	brown
gn	=	green
bl	=	blue
gr	=	grey
li	=	purple
ge	=	yellow
or	=	orange
rs	=	pink

Protected by copyright. Copying for private or commercial purposes, in part or in whole, is not permitted unless authorised by Volkswagen AG. Volkswagen AG does not guarantee or accept any liability with respect to the correctness of information in this document. Copyright by Volkswagen AG.

satelettronica

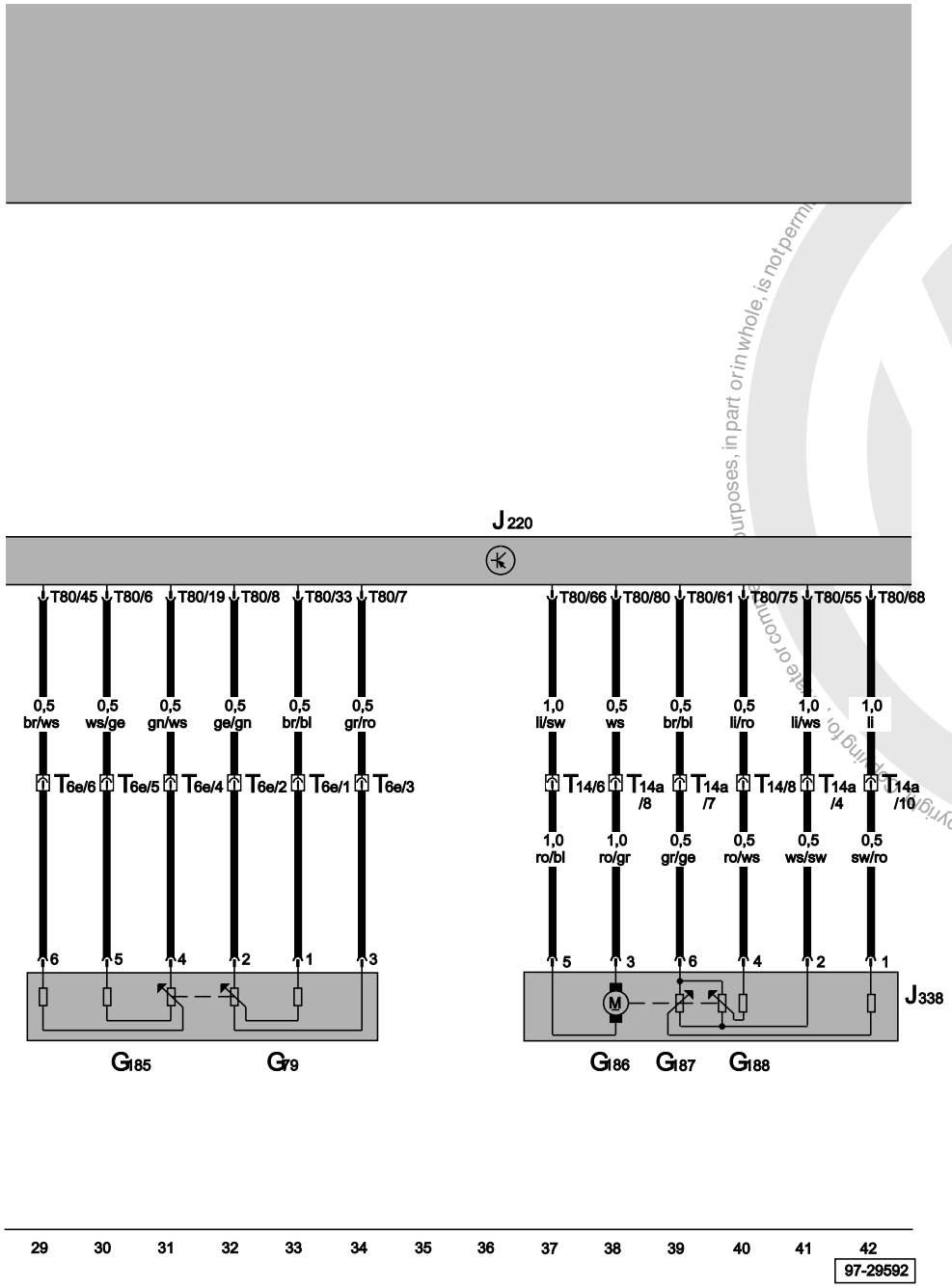

Motronic control unit, accelerator pedal position senders, throttle valve control unit

G79	Accelerator pedal position sender
G185	Accelerator pedal position sender -2-
G186	Throttle valve drive (electric throttle operation)
G187	Throttle valve drive angle sender -1- (electric throttle operation)
G188	Throttle valve drive angle sender -2- (electric throttle operation)
J338	Throttle valve control unit
J220	Motronic control unit
T6e	6-pin connector, near accelerator pedal position sender
T14	14-pin connector, in engine compartment
T14a	14-pin connector, in engine compartment
T80	80-pin connector

ws	=	white
sw	=	black
ro	=	red
br	=	brown
gn	=	green
bl	=	blue
gr	=	grey
li	=	purple
ge	=	yellow
or	=	orange
rs	=	pink

Protected by copyright. Copyright by Volkswagen AG.
Volkswagen AG. Volkswagen AG does not guarantee or accept any liability with respect to the correctness of information in this document. Copyright by Volkswagen AG. Protected by copyright. Copying for private or commercial purposes, in part or in whole, is not permitted.
satelettronica

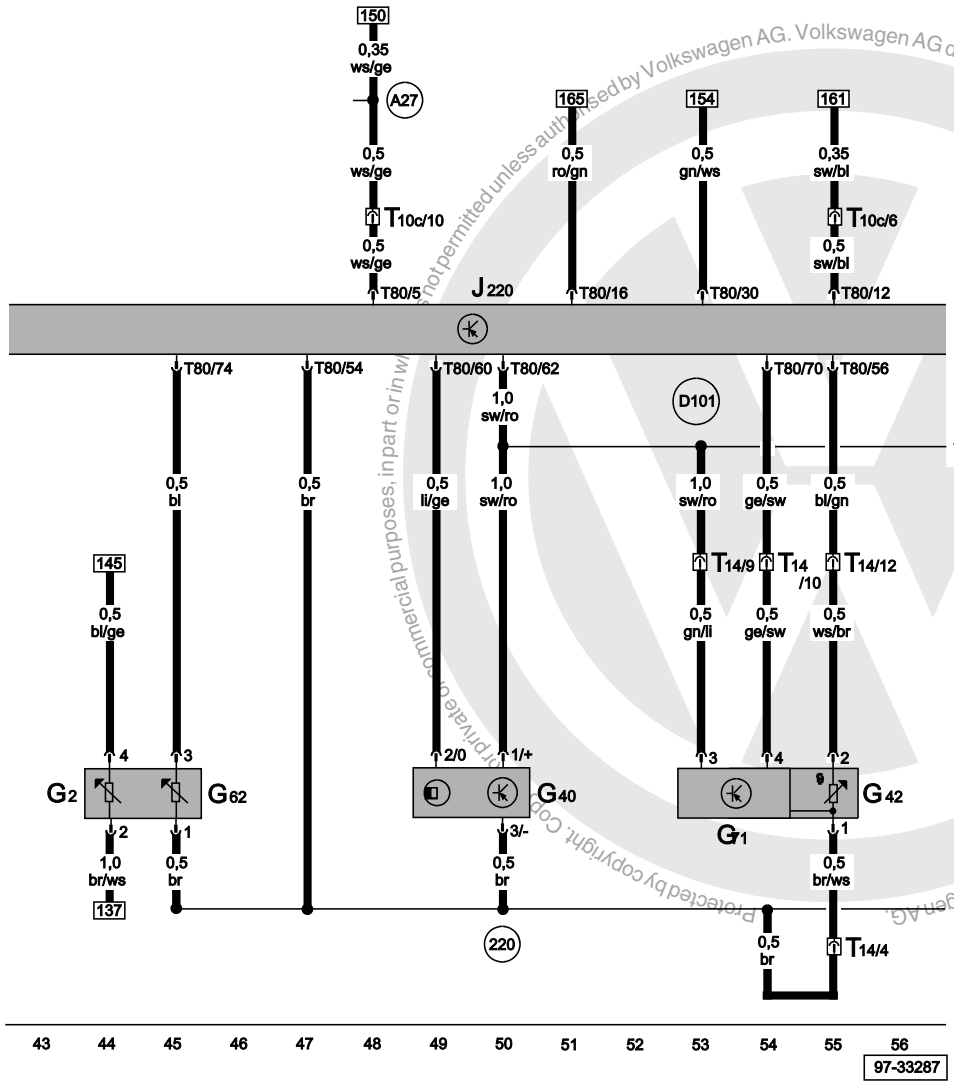

Motronic control unit, coolant temperature sender, intake air temperature sender, intake manifold pressure sender, Hall sender

G2	Coolant temperature sender
G40	Hall sender
G42	Intake air temperature sender
G62	Coolant temperature sender
G71	Intake manifold pressure sender
J220	Motronic control unit
T10c	10-pin connector, brown, coupling station under relay carrier, left
T14	14-pin connector, in engine compartment
T80	80-pin connector
220	Earth connection (sender earth), in engine wiring harness
A27	Connection (speed signal), in dash panel wiring harness
D101	Connection -1-, in engine compartment wiring harness

ws	=	white
sw	=	black
ro	=	red
br	=	brown
gn	=	green
bl	=	blue
gr	=	grey
li	=	purple
ge	=	yellow
or	=	orange
rs	=	pink

Protected by copyright. Copyright by Volkswagen AG. Not permitted unless authorised by Volkswagen AG. Volkswagen AG does not guarantee or accept any liability with respect to the correctness of information in this document. Copyright by Volkswagen AG. Not for commercial purposes, in part or in whole, private use only.

satelettronica

Motronic control unit, engine speed sender, knock sensor I, exhaust gas recirculation frequency valve

G28	Engine speed sender
G61	Knock sensor I
G212	Exhaust gas recirculation potentiometer
J220	Motronic control unit
N80	Exhaust gas recirculation frequency valve
SB30	Fuse -30- on fuse box
T2h	2-pin connector, near knock sensor I
T3d	3-pin connector, near engine speed sender
T10e	10-pin connector, green, coupling station under relay carrier, left
T14	14-pin connector, in engine compartment
T14a	14-pin connector, in engine compartment
T80	80-pin connector
220	Earth connection (sender earth), in engine wiring harness
D101	Connection -1-, in engine compartment wiring harness

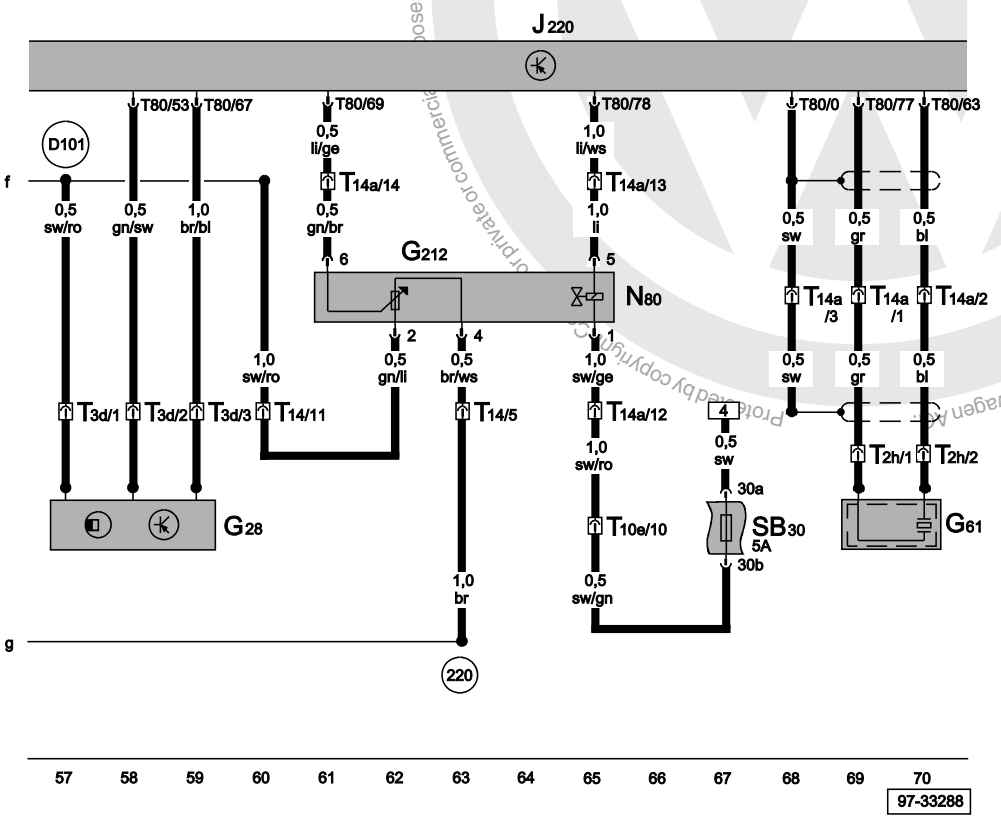

ws	=	white
sw	=	black
ro	=	red
br	=	brown
gn	=	green
bl	=	blue
gr	=	grey
li	=	purple
ge	=	yellow
or	=	orange
rs	=	pink

Protected by copyright. Copyright by Volkswagen AG. We guarantee or accept any liability with respect to the correctness of information in this document. Copyright by Volkswagen AG. Not for private or commercial purposes, in part or in whole, is not permitted.

satelettronica

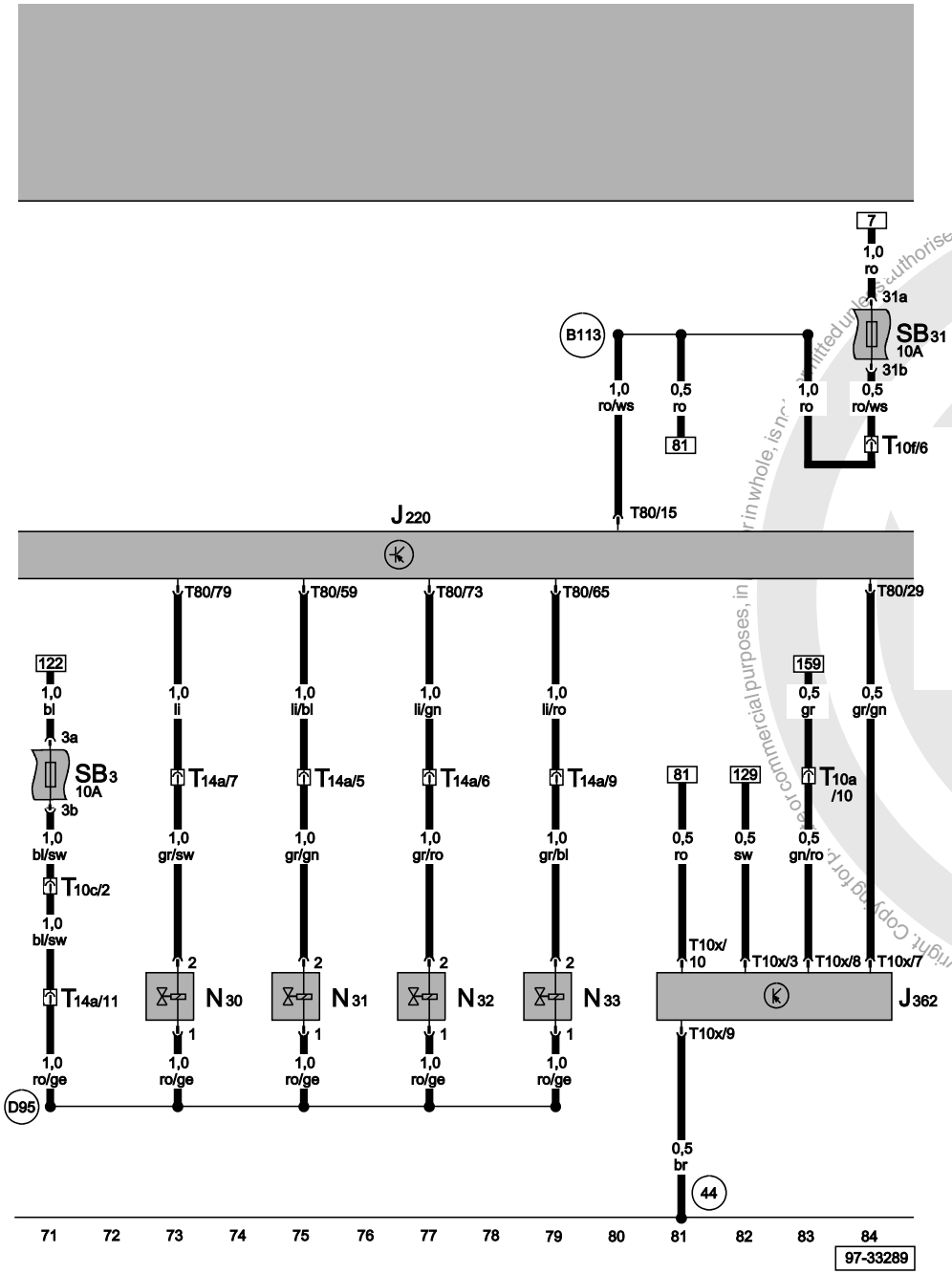

Motronic control unit, injectors, immobilizer control unit

J362	Immobilizer control unit
J220	Motronic control unit
N30	Injector, cylinder 1
N31	Injector, cylinder 2
N32	Injector, cylinder 3
N33	Injector, cylinder 4
SB3	Fuse -3- on fuse box
SB31	Fuse -31- on fuse box
T10a	10-pin connector, black, coupling station under relay carrier, left
T10c	10-pin connector, brown, coupling station under relay carrier, left
T10f	10-pin connector, purple, coupling station under relay carrier, left
T10x	10-pin connector, on immobilizer control unit
T14a	14-pin connector, in engine compartment
T80	80-pin connector
44	Earth point, lower part of left A-pillar
B113	Positive (+) connection (30a), in left interior wiring harness
D95	Connection (injectors), in engine compartment wiring harness

ws	=	white
sw	=	black
ro	=	red
br	=	brown
gn	=	green
bl	=	blue
gr	=	grey
li	=	purple
ge	=	yellow
or	=	orange
rs	=	pink

Protected by copyright. Copying for private or commercial purposes, in whole or in part, is not permitted unless authorised by Volkswagen AG. Volkswagen AG does not guarantee or accept any liability with respect to the correctness of information in this document. Copyright by Volkswagen AG.

satelettronica

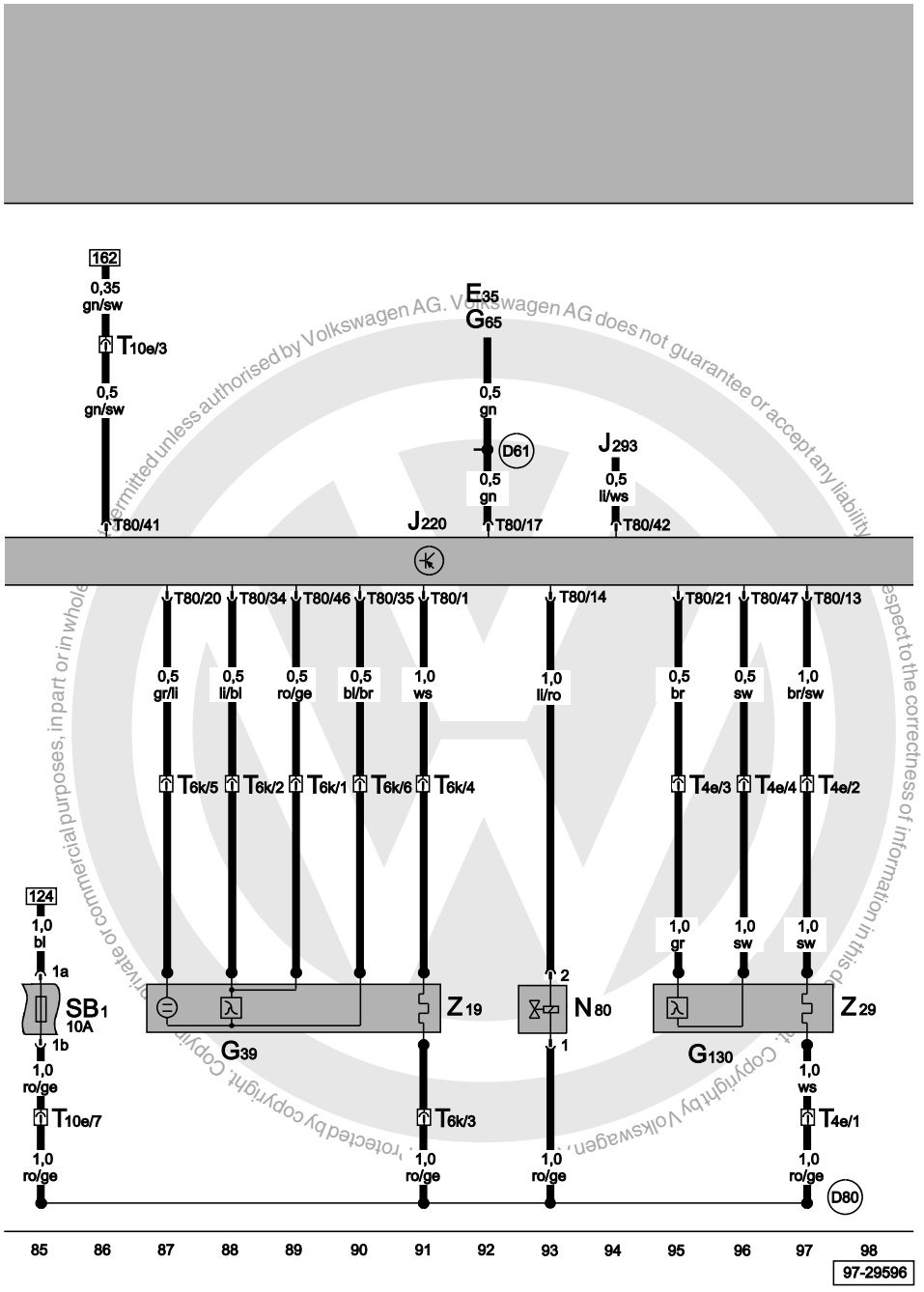

Motronic control unit, lambda probe, lambda probe after catalyst, activated charcoal filter system solenoid valve 1

E35	Air conditioner switch
G65	High pressure sender
G39	Lambda probe
G130	Lambda probe after catalyst
J293	Radiator fan control unit
J220	Motronic control unit
N80	Activated charcoal filter system solenoid valve 1 (pulsed)
SB1	Fuse -1- on fuse box
T4e	4-pin connector, near lambda probe
T6k	6-pin connector, near lambda probe
T10e	10-pin connector, green, coupling station under relay carrier, left
T80	80-pin connector
Z19	Lambda probe heater
Z29	Lambda probe 1 heater, after catalyst
D61	Connection (air conditioner), in engine compartment wiring harness
D80	Positive (+) connection (87a - for activated charcoal filter system solenoid valve), in engine compartment wiring harness

ws	=	white
sw	=	black
ro	=	red
br	=	brown
gn	=	green
bl	=	blue
gr	=	grey
li	=	purple
ge	=	yellow
or	=	orange
rs	=	pink

satelettronica

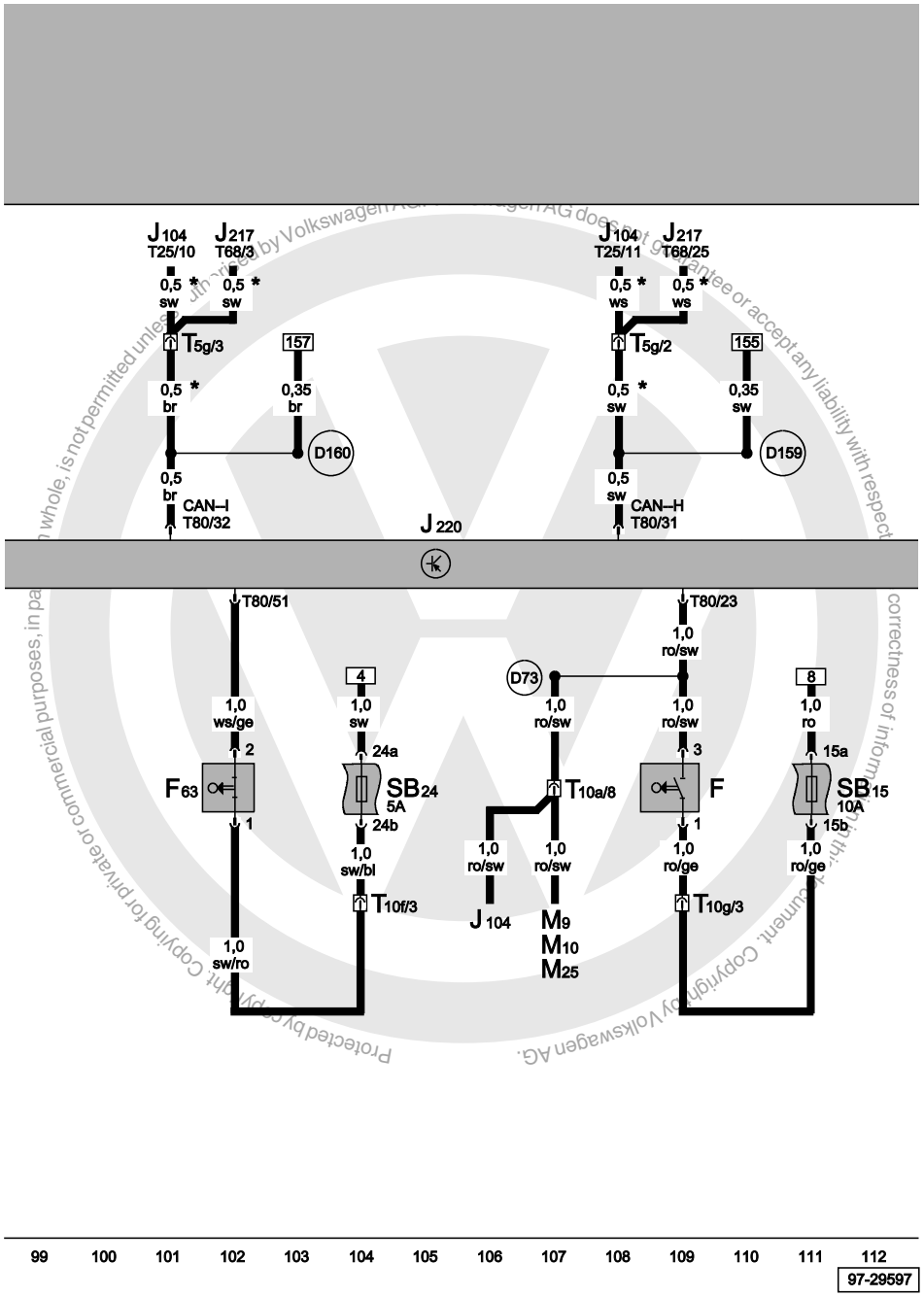

Motronic control unit, brake light switch, brake pedal switch

F	Brake light switch
F63	Brake pedal switch
J104	ABS with EDL control unit
J217	Automatic gearbox control unit
J220	Motronic control unit
M9	Brake light bulb, left
M10	Brake light bulb, right
M25	High level brake light bulb
SB15	Fuse -15- on fuse box
SB24	Fuse -24- on fuse box
T5g	5-pin connector, pink, coupling station under relay carrier, left
T10a	10-pin connector, black, coupling station under relay carrier, left
T10f	10-pin connector, purple, coupling station under relay carrier, left
T10g	10-pin connector, red, coupling station under relay carrier, left
T25	25-pin connector
T68	68-pin connector
T80	80-pin connector
D73	Positive (+) connection (54), in engine compartment wiring harness
D159	Positive (+) connection (high bus), in interior wiring harness
D160	Positive (+) connection (low bus), in engine compartment wiring harness
*	Depends on equipment

ws	=	white
sw	=	black
ro	=	red
br	=	brown
gn	=	green
bl	=	blue
gr	=	grey
li	=	purple
ge	=	yellow
or	=	orange
rs	=	pink

satelettronica

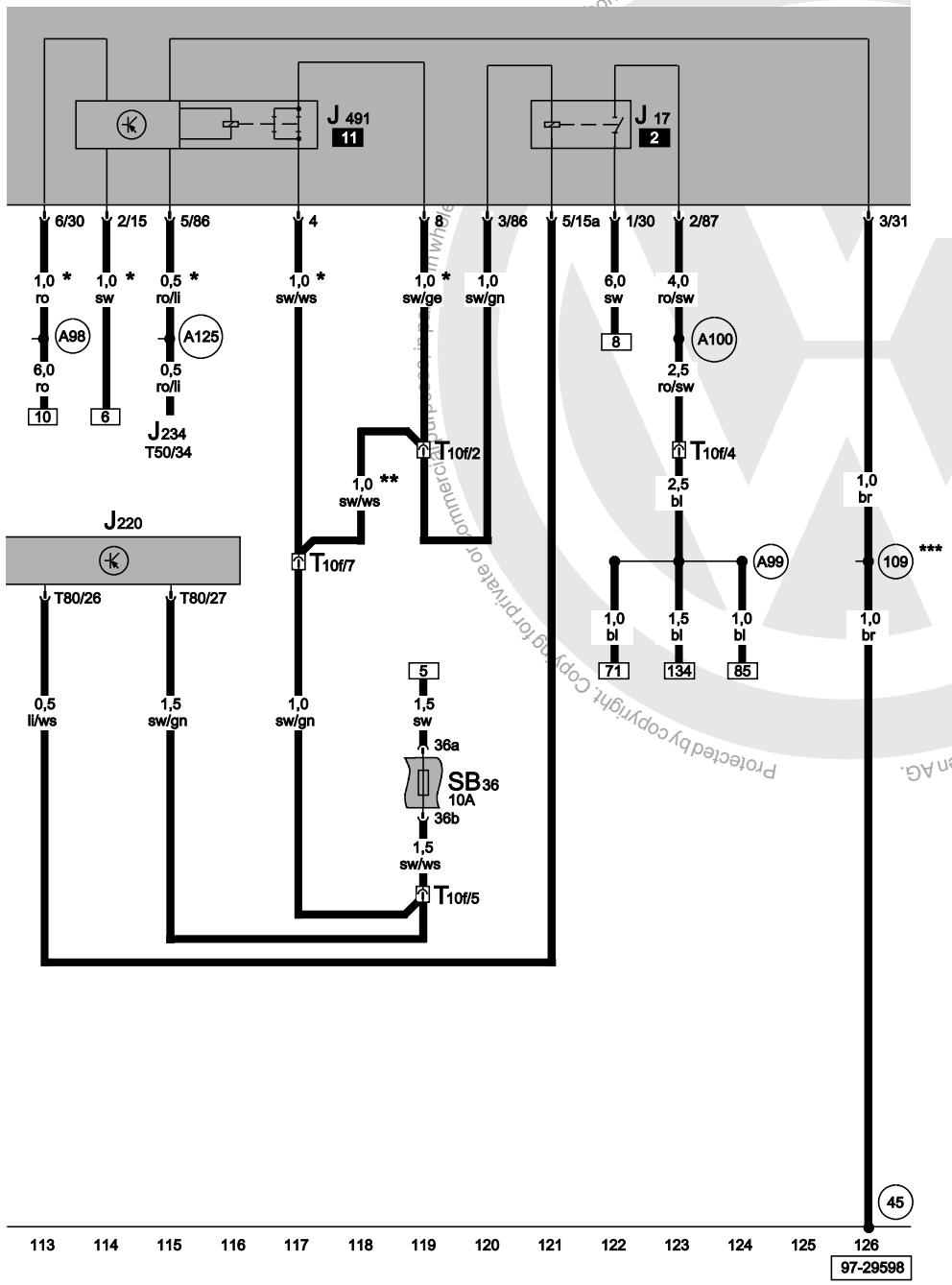

Motronic control unit, fuel pump relay, fuel shut-off control unit (crash)

J17	Fuel pump relay
J234	Airbag control unit
J491	Fuel shut-off control unit (crash)
J220	Motronic control unit
SB36	Fuse -36- on fuse box
T10f	10-pin connector, purple, coupling station under relay carrier, left
T50	50-pin connector
T80	80-pin connector
45	Earth point, behind dash panel - centre
109	Earth connection, in airbag wiring harness
A98	Positive (+) connection -4- (30), in dash panel wiring harness
A99	Connection -1- (87), in dash panel wiring harness
A100	Connection -2- (87), in dash panel wiring harness
A125	Connection (crash signal), in dash panel wiring harness
*	Only models with airbag
**	Only models without airbag
***	Does not apply to models with driver airbag , without window lifter

ws	=	white
sw	=	black
ro	=	red
br	=	brown
gn	=	green
bl	=	blue
gr	=	grey
li	=	purple
ge	=	yellow
or	=	orange
rs	=	pink

Protected by copyright. Copying for private or commercial purposes, in part or in whole, is not permitted unless authorised by Volkswagen AG. Volkswagen AG does not guarantee or accept any liability with respect to the correctness and completeness of this document. Copyright by Volkswagen AG.
satelettronica

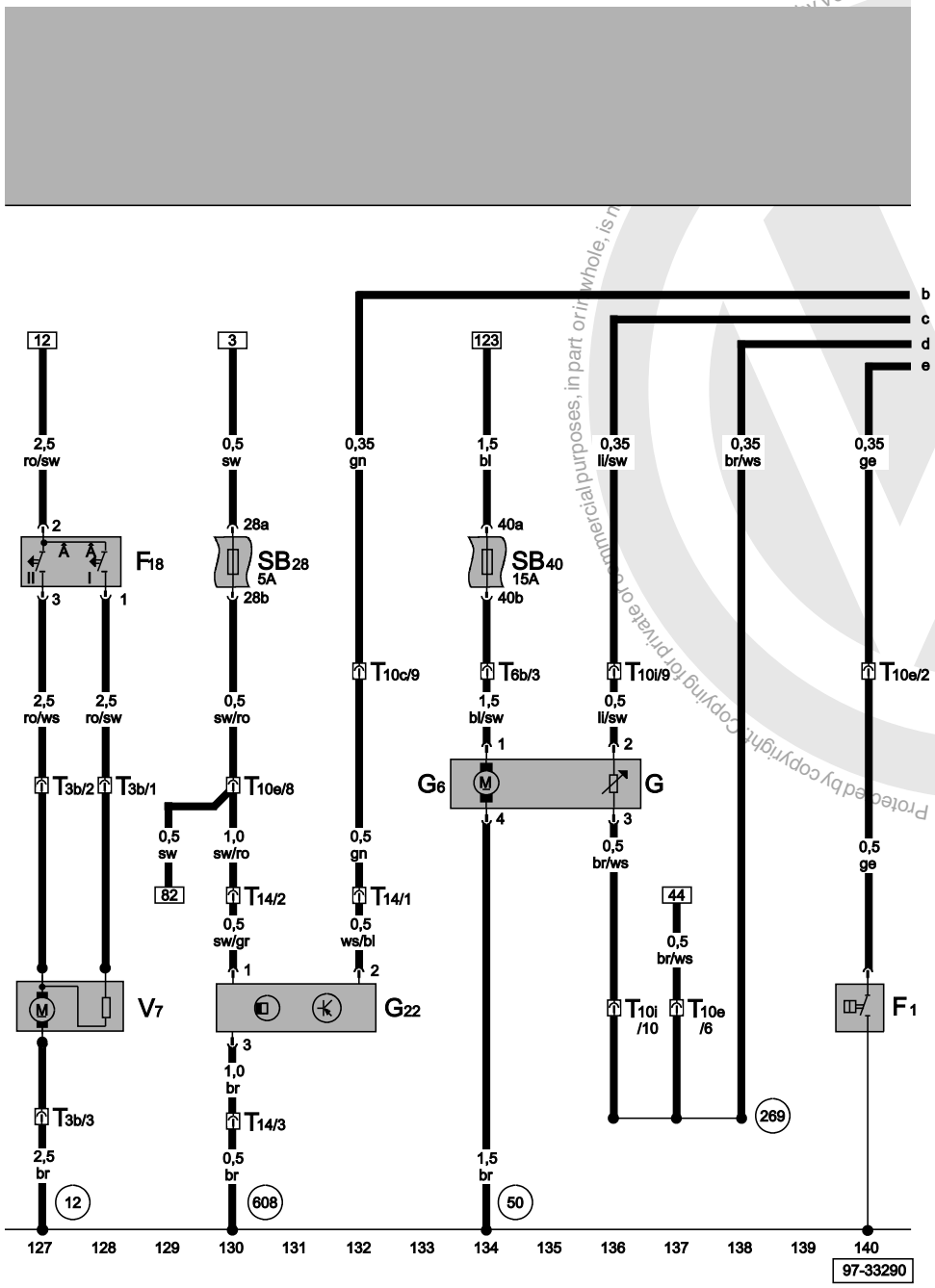

Oil pressure switch, fuel pump, speedometer sender, radiator fan, radiator fan thermo-switch, fuel pump, fuel gauge sender

F1	Oil pressure switch
F18	Radiator fan thermo-switch
G	Fuel gauge sender
G6	Fuel pump (pre-supply pump)
G22	Speedometer sender (Hall sender, on gearbox)
SB28	Fuse -28- on fuse box
SB40	Fuse -40- on fuse box
T3b	3-pin connector, on radiator fan
T6b	6-pin connector, grey, coupling station under relay carrier, left
T10c	10-pin connector, brown, coupling station under relay carrier, left
T10e	10-pin connector, green, coupling station under relay carrier, left
T10i	10-pin connector, orange, coupling station under relay carrier, left
T14	14-pin connector, in engine compartment
V7	Radiator fan
12	Earth point, left in engine compartment
50	Earth point, on left luggage compartment
269	Earth connection (sender earth) -1-, in dash panel wiring harness
608	Earth point, in centre of plenum chamber

ws	=	white
sw	=	black
ro	=	red
br	=	brown
gn	=	green
bl	=	blue
gr	=	grey
li	=	purple
ge	=	yellow
or	=	orange
rs	=	pink

Volkswagen AG. Volkswagen AG does not guarantee or accept any liability with respect to the correctness of information in this document. Copyright by Volkswagen AG.
Protected by copyright. Copying for private or commercial purposes, in part or in whole, is not permitted unless authorised by Volkswagen AG.
satelettronica

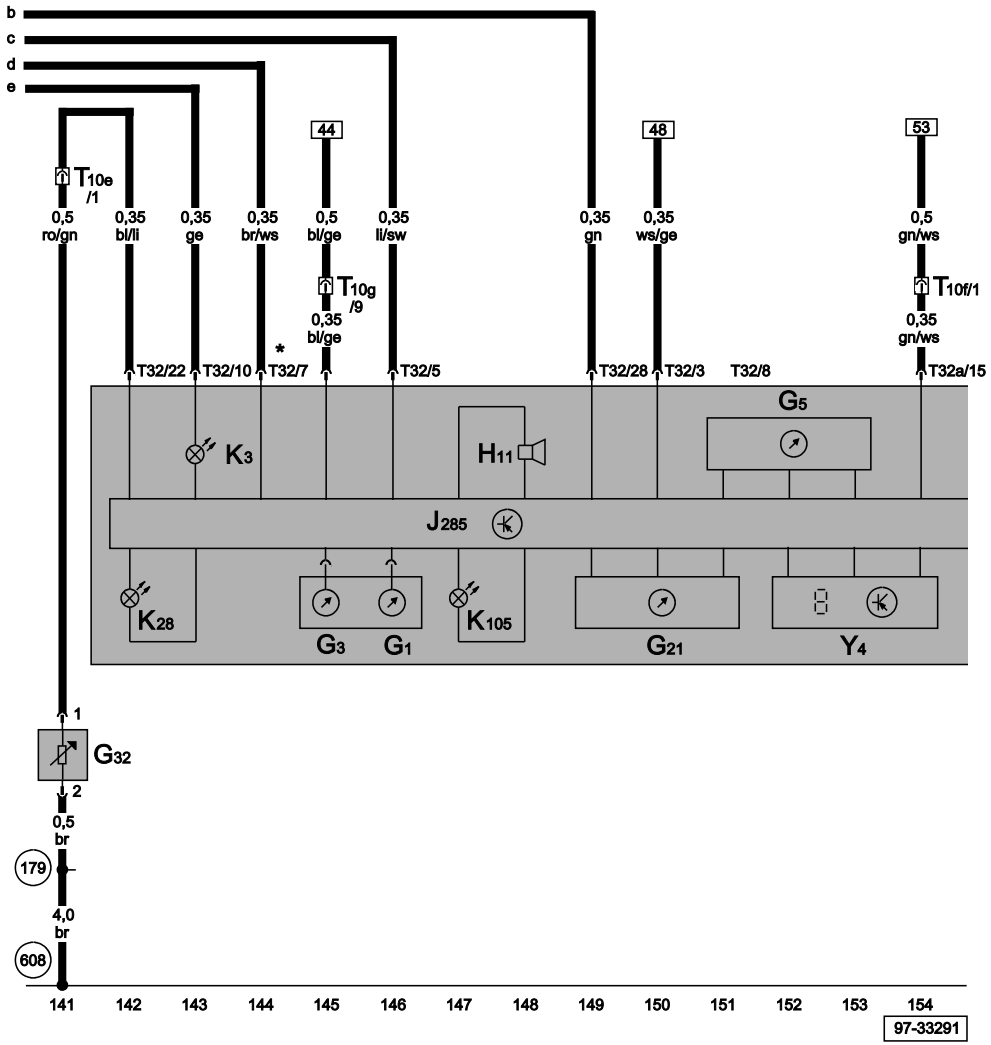

Control unit with display in dash panel insert, coolant shortage indicator sender, oil pressure warning lamp

G1	Fuel gauge
G3	Coolant temperature gauge
G5	Rev. counter
G21	Speedometer
G32	Coolant shortage indicator sender
H11	Oil pressure warning buzzer
J285	Control unit with display in dash panel insert
K3	Oil pressure warning lamp
K28	Coolant temperature/coolant shortage warning lamp
K105	Reserve fuel warning lamp
T10e	10-pin connector, green, coupling station under relay carrier, left
T10f	10-pin connector, purple, coupling station under relay carrier, left
T10g	10-pin connector, red, coupling station under relay carrier, left
T32	32-pin connector, blue, on dash panel insert
T32a	32-pin connector, green, on dash panel insert
Y4	Odometer display
179	Earth connection, in left headlight wiring harness
608	Earth point, in centre of plenum chamber
*	Output for signal earth

ws	=	white
sw	=	black
ro	=	red
br	=	brown
gn	=	green
bl	=	blue
gr	=	grey
li	=	purple
ge	=	yellow
or	=	orange
rs	=	pink

Protected by copyright. Copying for private or commercial purposes, in part or in whole, is not permitted unless authorised by Volkswagen AG. Volkswagen AG does not guarantee or accept any liability with respect to the correctness of information in this document. Copyright by Volkswagen AG.
satelettronica

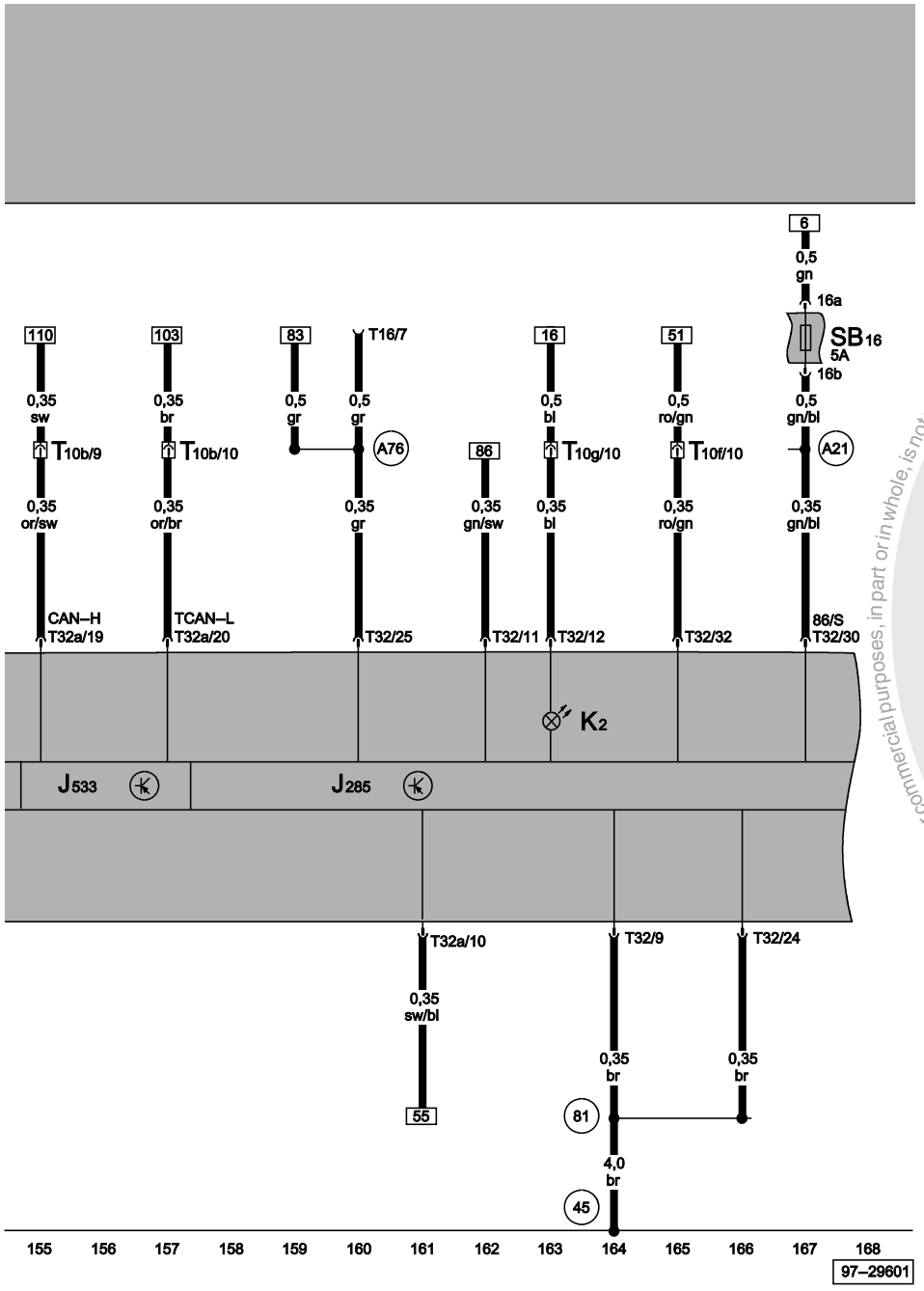

Control unit with display in dash panel insert, diagnostic connector, alternator warning lamp, data bus diagnostic interface

J285	Control unit with display in dash panel insert
J533	Data bus diagnostic interface
K2	Alternator warning lamp
SB16	Fuse -16- on fuse box
T10b	10-pin connector, white, coupling station under relay carrier, left
T10f	10-pin connector, purple, coupling station under relay carrier, left
T10g	10-pin connector, red, coupling station under relay carrier, left
T16	16-pin connector, diagnostic connector
T32	32-pin connector, blue, on dash panel insert
T32a	32-pin connector, green, on dash panel insert
45	Earth point, behind dash panel - centre
81	Earth connection -1-, in dash panel wiring harness
A21	Connection (86s), in dash panel wiring harness
A76	Connection (diagnosis wire K), in dash panel wiring harness

ws	=	white
sw	=	black
ro	=	red
br	=	brown
gn	=	green
bl	=	blue
gr	=	grey
li	=	purple
ge	=	yellow
or	=	orange
rs	=	pink

Protected by copyright. Copying for private or commercial purposes, in part or in whole, is not permitted unless authorised by Volkswagen AG. Volkswagen AG does not guarantee or accept any liability with respect to the correctness of information in this document. Copyright by Volkswagen AG.

satelettronica

Air conditioner

⇒ 1.4 l/44 kW Motronic, engine codes AUD
⇒ 1,4 l/44 kW MPI-RSH, engine codes AKK, ANW
⇒ 1.4 l/55 kW - 4LV, engine codes APE, AUA
⇒ 1.6 l Simos/74 kW, engine codes APF, AUR

From May 2000

Protected by copyright. Copying for private or commercial purposes, in part or in whole, is not permitted unless authorised by Volkswagen AG. Volkswagen AG does not guarantee or accept any liability with respect to the correctness of information in this document. Copyright by Volkswagen AG.

For alternatives to relay and fuse positions as well as multi-pin connector wiring - see "Fitting locations" section.

Relay locations on relay plate:

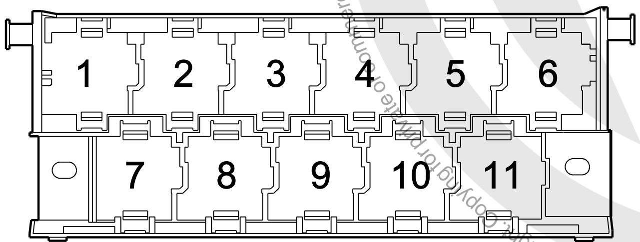

97-22850

5 - X contact relief relay

Note:

♦ *The number in brackets behind the part designation denotes the control number on the housing.*

Fuse colours

30 A - green
25 A - white
20 A - yellow
15 A - blue
10 A - red
7.5 A - brown

satelettronica

5 A - beige
3 A - purple

Protected by copyright. Copying for private or commercial purposes, in part or in whole, is not permitted unless authorised by Volkswagen AG. Volkswagen AG does not guarantee or accept any liability with respect to the correctness of information in this document. Copyright by Volkswagen AG.

satelettronica

Fresh air blower switch, air conditioner switch, fresh air/air recirculating flap switch, fresh air blower, fresh/recirculating air flap control motor

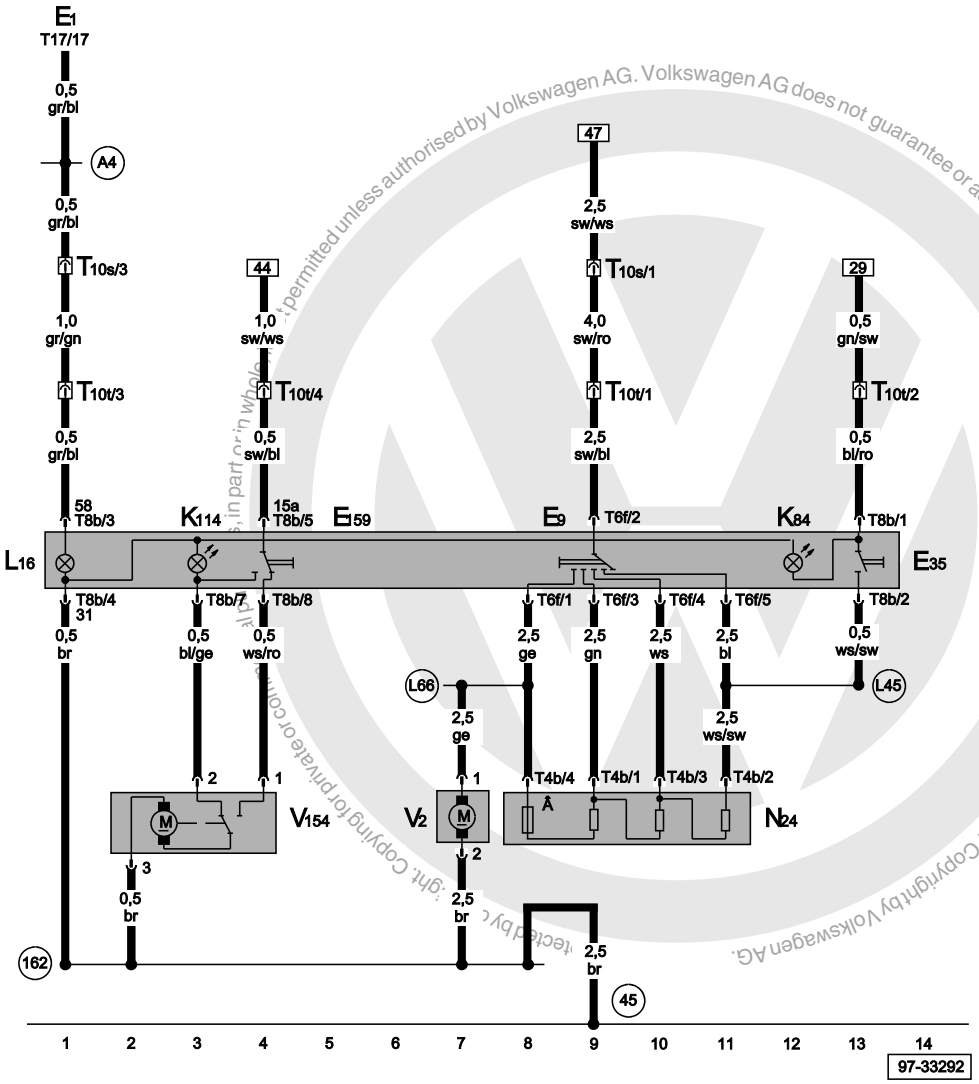

E1	Light switch
E9	Fresh air blower switch
E35	Air conditioner switch
E159	Fresh air/air recirculating flap switch
K84	Air conditioning system warning lamp
K114	Fresh air/air recirculation warning lamp
L16	Fresh air control light bulb
N24	Fresh air blower with overheating fuse series resistor
T4b	4-pin connector, on fresh air blower series resistor
T6f	6-pin connector, on fresh air blower switch
T8b	8-pin connector, on fresh air blower switch
T10s	10-pin connector, on radiator fan control unit
T10t	10-pin connector, coupling station under relay carrier, left
T17	17-pin connector, on light switch
V2	Fresh air blower
V154	Fresh air/recirculated air flap control motor
45	Earth point, behind dash panel - centre
162	Earth connection, in blower motor wiring harness
A4	Positive (+) connection (58b), in dash panel wiring harness
L45	Connection, in air conditioner controls wiring harness
L66	Connection, in heater blower wiring harness

ws	=	white
sw	=	black
ro	=	red
br	=	brown
gn	=	green
bl	=	blue
gr	=	grey
li = purple
ge = yellow
or = orange
rs = pink

satelettronica

Copyright by Volkswagen AG. Volkswagen AG does not guarantee or accept any liability with respect to the correctness of information in this document. Copyright by Volkswagen AG. Copying for private or commercial purposes, in part or in whole, is not permitted unless authorised by Volkswagen AG.

Radiator fan control unit, air conditioner magnetic coupling, radiator fan, radiator fan, right

J220	Motronic control unit
J293	Radiator fan control unit, in engine compartment, front left
J361	Simos control unit
N25	Air conditioning system magnetic coupling
T4g	4-pin connector, on radiator fan control unit
T4h	4-pin connector, on radiator fan
T5d	5-pin connector, in engine compartment, near gearbox
T5h	5-pin connector, brown, coupling station under relay carrier, left
T14b	14-pin connector, on radiator fan control unit
T80	80-pin connector
T121	121-pin connector
V7	Radiator fan
V35	Radiator fan, right
12	Earth point, left in engine compartment
193	Earth connection -1-, in radiator fan wiring harness
D135	Connection (1st fan speed), in engine - headlight wiring harness
*	Only for engine codes APE, AQQ, AUA
**	Only for engine codes APF
***	Only for engine codes AKL, AEH
****	Only for engine codes AKK, ANW

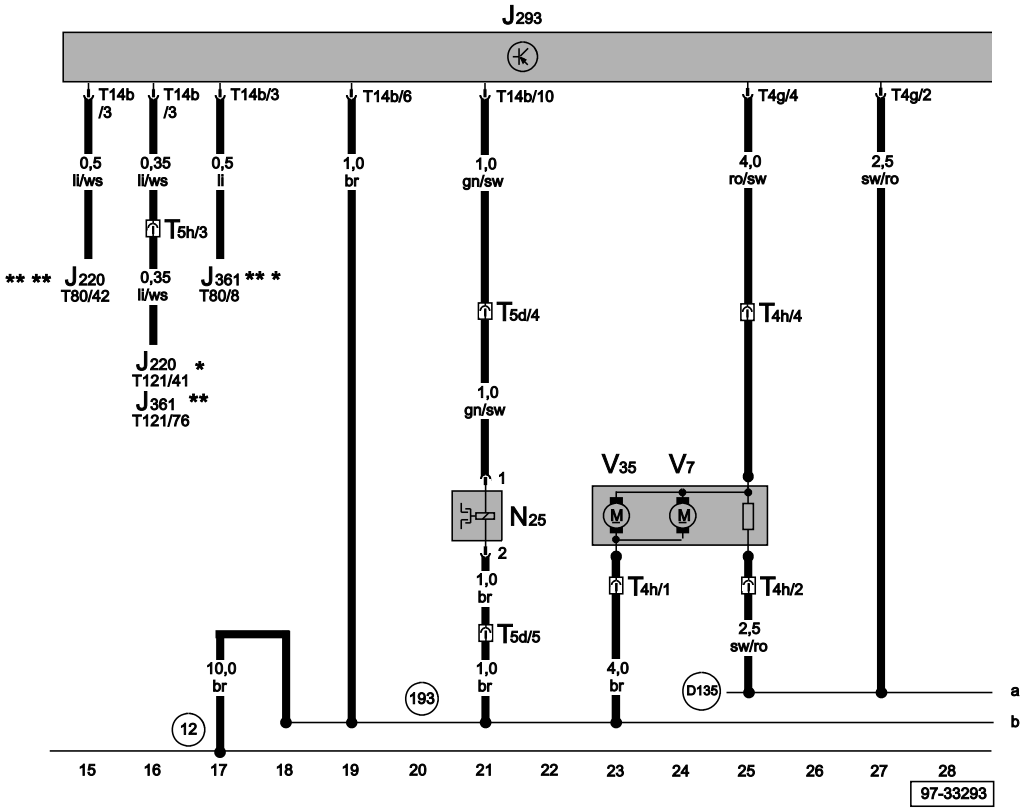

ws	=	white
sw	=	black
ro	=	red
br	=	brown
gn	=	green
bl	=	blue
gr	=	grey
li	=	purple
ge	=	yellow
or	=	orange
rs	=	pink

Protected by copyright. Copyright by Volkswagen AG. Volkswagen AG does not guarantee or accept any liability with respect to the correctness of information in this document. Copyright by Volkswagen AG. Reproduction for commercial purposes, in part or in whole, is not permitted unless authorised by Volkswagen AG.
satelettronica

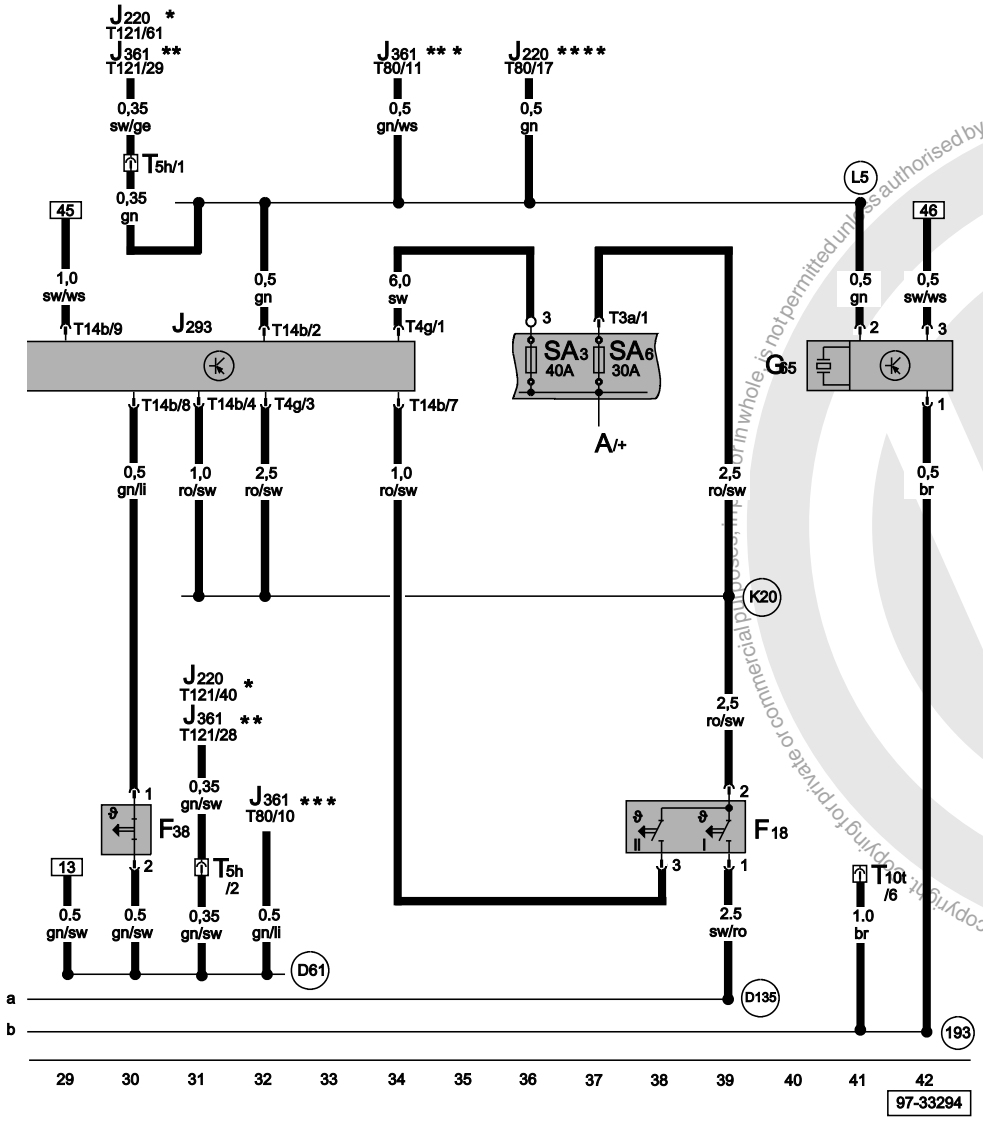

Radiator fan control unit, ambient temperature switch, radiator fan thermo-switch, high pressure sender

A	Battery
F18	Radiator fan thermo-switch
F38	Ambient temperature switch
G65	High pressure sender
J220	Motronic control unit
J293	Radiator fan control unit
J361	Simos control unit
SA3	Fuse -3- on battery fuse box
SA6	Fuse -6- on battery fuse box
T3a	3-pin connector, on battery fuse box
T4g	4-pin connector, on radiator fan control unit
T5h	5-pin connector, brown, coupling station under relay carrier, left
T10t	10-pin connector, coupling station under relay carrier, left
T14b	14-pin connector, on radiator fan control unit
T80	80-pin connector
T121	121-pin connector
193	Earth connection -1-, in radiator fan wiring harness
D61	Connection (air conditioner), in engine compartment wiring harness
D135	Connection (1st fan speed), in engine - headlight wiring harness
K20	Positive (+) connection -1- (30), in radiator fan wiring harness
L5	Connection -1-, in air conditioner wiring harness
*	Only for engine codes APE, AQQ, AUA
**	Only for engine codes APF
***	Only for engine codes AKL, AEH
****	Only for engine codes AKK, ANW

ws	=	white
sw	=	black
ro	=	red
br	=	brown
gn	=	green
bl	=	blue
gr	=	grey
li	=	purple
ge	=	yellow
or	=	orange
rs	=	pink

Protected by copyright. Copying for private or commercial purposes, in part or in whole, is not permitted unless authorised by Volkswagen AG. Volkswagen AG does not guarantee or assume any liability with respect to the correctness and completeness of information in this document. Copyright by Volkswagen AG.

satelettronica

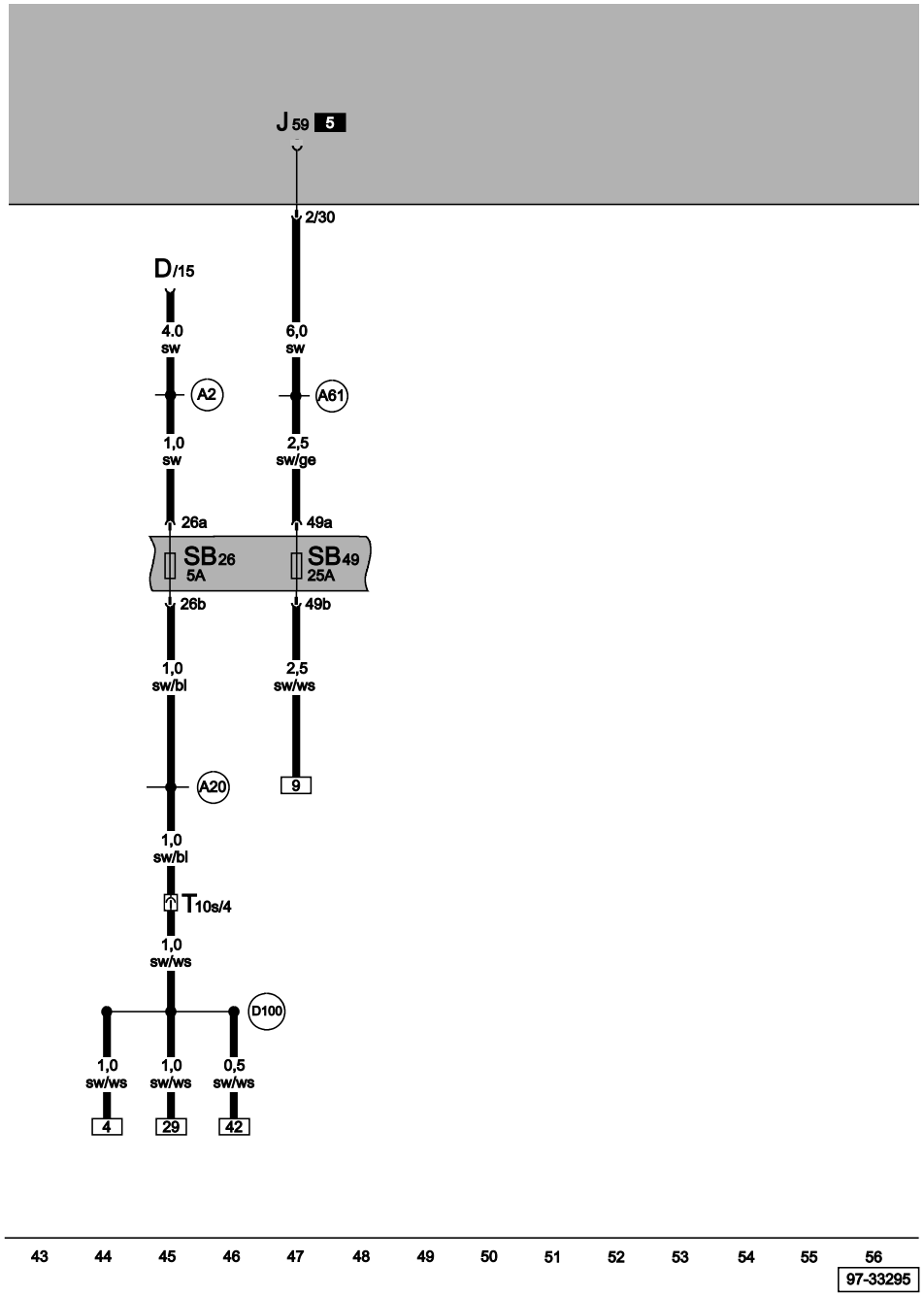

Fuses

D	Ignition/starter switch
J59	X contact relief relay
SB26	Fuse -26- on fuse box
SB49	Fuse -49- on fuse box
T10s	10-pin connector, on radiator fan control unit
A2	Positive (+) connection (15), in dash panel wiring harness
A20	Positive (+) connection (15a), in dash panel wiring harness
A61	Positive (+) connection (X), in dash panel wiring harness
D100	Positive (+) connection -2- (15), in engine compartment wiring harness

ws	=	white
sw	=	black
ro	=	red
br	=	brown
gn	=	green
bl	=	blue
gr	=	grey
li	=	purple
ge	=	yellow
or	=	orange
rs	=	pink

Protected by copyright. Copying for private or commercial purposes, in part or in whole, is not permitted unless authorised by Volkswagen AG. Copyright by Volkswagen AG.
Volkswagen AG does not guarantee or accept any liability with respect to the correctness of information in this document.
satelettronica

Air conditioner

⇒ 1.9 l/50 kW SDI, engine codes AGP, AQM
⇒ 1.9 l/66 kW turbo-diesel engine, engine codes AGR, ALH
⇒ 1.9 l TDI/81kW, engine codes ASK, ASV
From May 2000

For alternatives to relay and fuse positions as well as multi-pin connector wiring - see "Fitting locations" section.

Relay locations on relay plate:

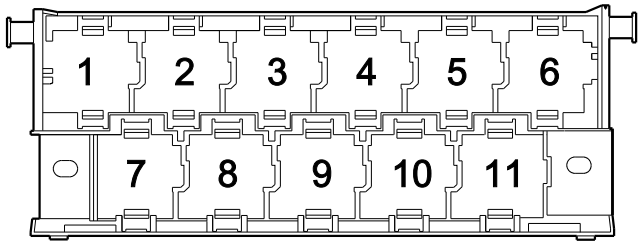

97-22850

1 - Radiator fan run-on control unit
5 - X contact relief relay

Note:

♦ *The number in brackets behind the part designation denotes the control number on the housing.*

Fuse colours

30 A - green
25 A - white
20 A - yellow
15 A - blue
10 A - red
7.5 A - brown
5 A - beige

Protected by copyright. Copying for private or commercial purposes, in part or in whole, is not permitted unless authorised by Volkswagen AG. Volkswagen AG does not guarantee or accept any liability with respect to the correctness of information in this document. Copyright by Volkswagen AG.

satelettronica

3 A - purple

Protected by copyright. Copying for private or commercial purposes, in part or in whole, is not permitted unless authorised by Volkswagen AG. Volkswagen AG does not guarantee or accept any liability with respect to the correctness of information in this document. Copyright by Volkswagen AG.

satelettronica

Fresh air blower switch, air conditioner switch, fresh air/air recirculating flap switch, fresh air blower, fresh/recirculating air flap control motor

E1	Light switch
E9	Fresh air blower switch
E35	Air conditioner switch
E159	Fresh air/air recirculating flap switch
K84	Air conditioning system warning lamp
K114	Fresh air/air recirculation warning lamp
L16	Fresh air control light bulb
N24	Fresh air blower with overheating fuse series resistor
T4b	4-pin connector, on fresh air blower series resistor
T6f	6-pin connector, on fresh air blower switch
T8b	8-pin connector, on fresh air blower switch
T10s	10-pin connector, on radiator fan control unit
T10t	10-pin connector, coupling station under relay carrier, left
T17	17-pin connector, on light switch
V2	Fresh air blower
V154	Fresh air/recirculated air flap control motor
45	Earth point, behind dash panel - centre
162	Earth connection, in blower motor wiring harness
A4	Positive (+) connection (58b), in dash panel wiring harness
L45	Connection, in air conditioner controls wiring harness
L66	Connection, in heater blower wiring harness

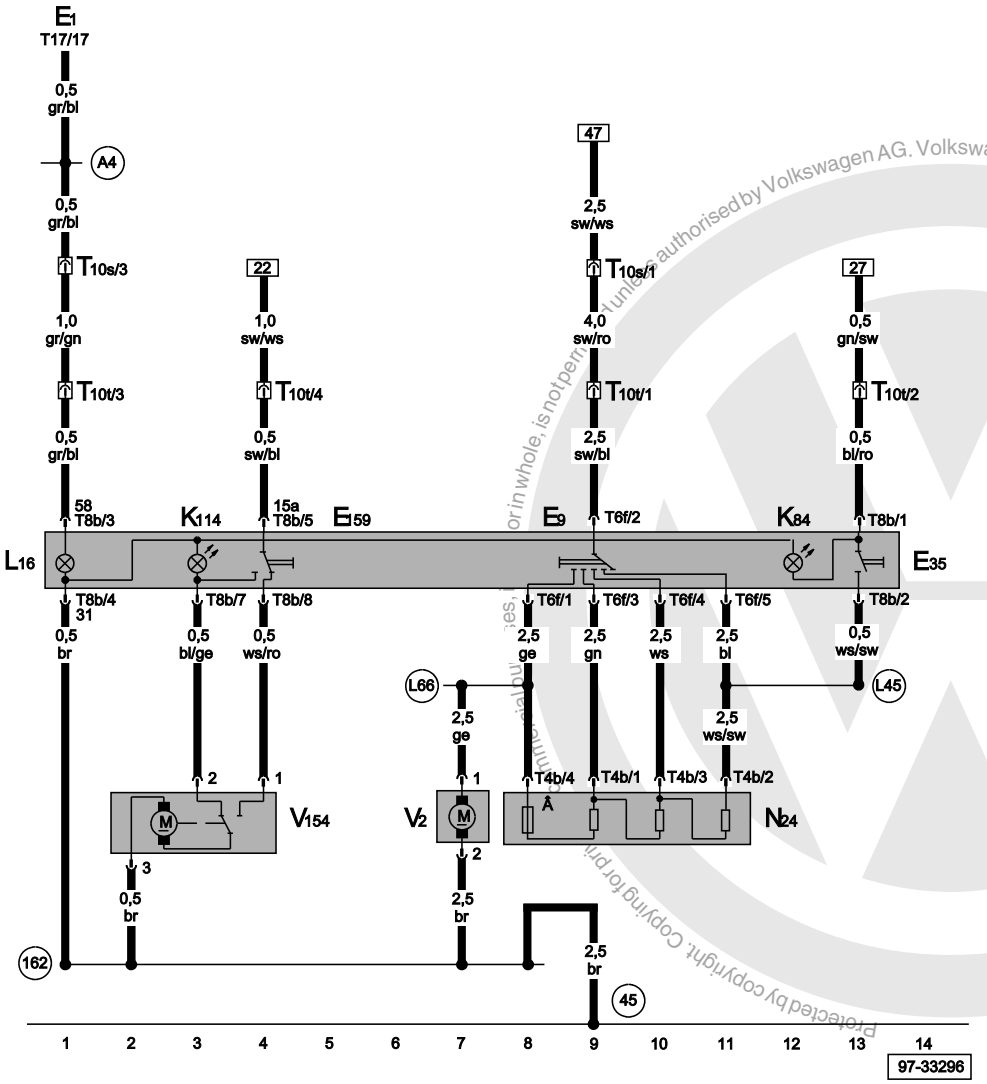

ws	=	white
sw	=	black
ro	=	red
br	=	brown
gn	=	green
bl	=	blue
gr	=	grey
li	=	purple
ge	=	yellow
or	=	orange
rs	=	pink

Protected by copyright. Copying for private, commercial purposes, in whole or in part, is not permitted unless authorised by Volkswagen AG. Volkswagen AG does not guarantee or accept any liability with respect to the correctness of information in this document. Copyright by Volkswagen AG.

satelettronica

Radiator fan control unit, air conditioner magnetic coupling, radiator fan, radiator fan, right, high pressure sender

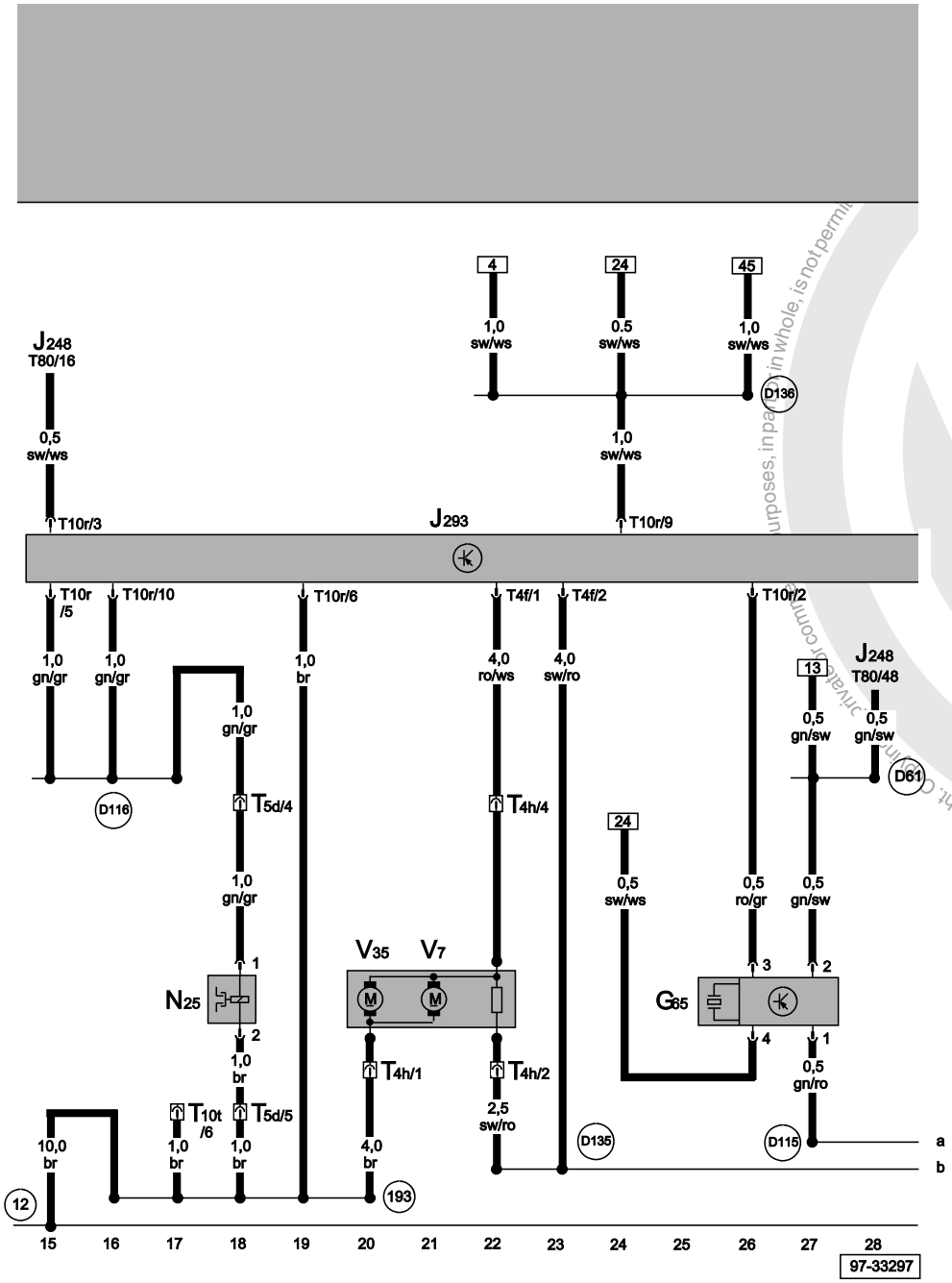

G65	High pressure sender
J248	Diesel direct injection system control unit
J293	Radiator fan control unit, in engine compartment, front left
N25	Air conditioning system magnetic coupling
T4f	4-pin connector, on radiator fan control unit
T4h	4-pin connector, on radiator fan
T5d	5-pin connector, in engine compartment, near gearbox
T10r	10-pin connector, on radiator fan control unit
T10t	10-pin connector, coupling station under relay carrier, left
T80	80-pin connector
V7	Radiator fan
V35	Radiator fan, right
12	Earth point, left in engine compartment
193	Earth connection -1-, in radiator fan wiring harness
D61	Connection (air conditioner), in engine compartment wiring harness
D115	Connection -13-, in engine compartment wiring harness
D116	Connection -14-, in engine compartment wiring harness
D135	Connection (1st fan speed), in engine - headlight wiring harness
D136	Positive (+) connection -2- (15a), in engine compartment wiring harness

ws	=	white
sw	=	black
ro	=	red
br	=	brown
gn	=	green
bl	=	blue
gr	=	grey
li	=	purple
ge	=	yellow
or	=	orange
rs	=	pink

Protected by copyright. Copying for private or commercial purposes, in part or in whole, is not permitted by Volkswagen AG. Volkswagen AG does not guarantee or accept any liability with respect to the correctness of information in this document. Copyright by Volkswagen AG.
satelettronica

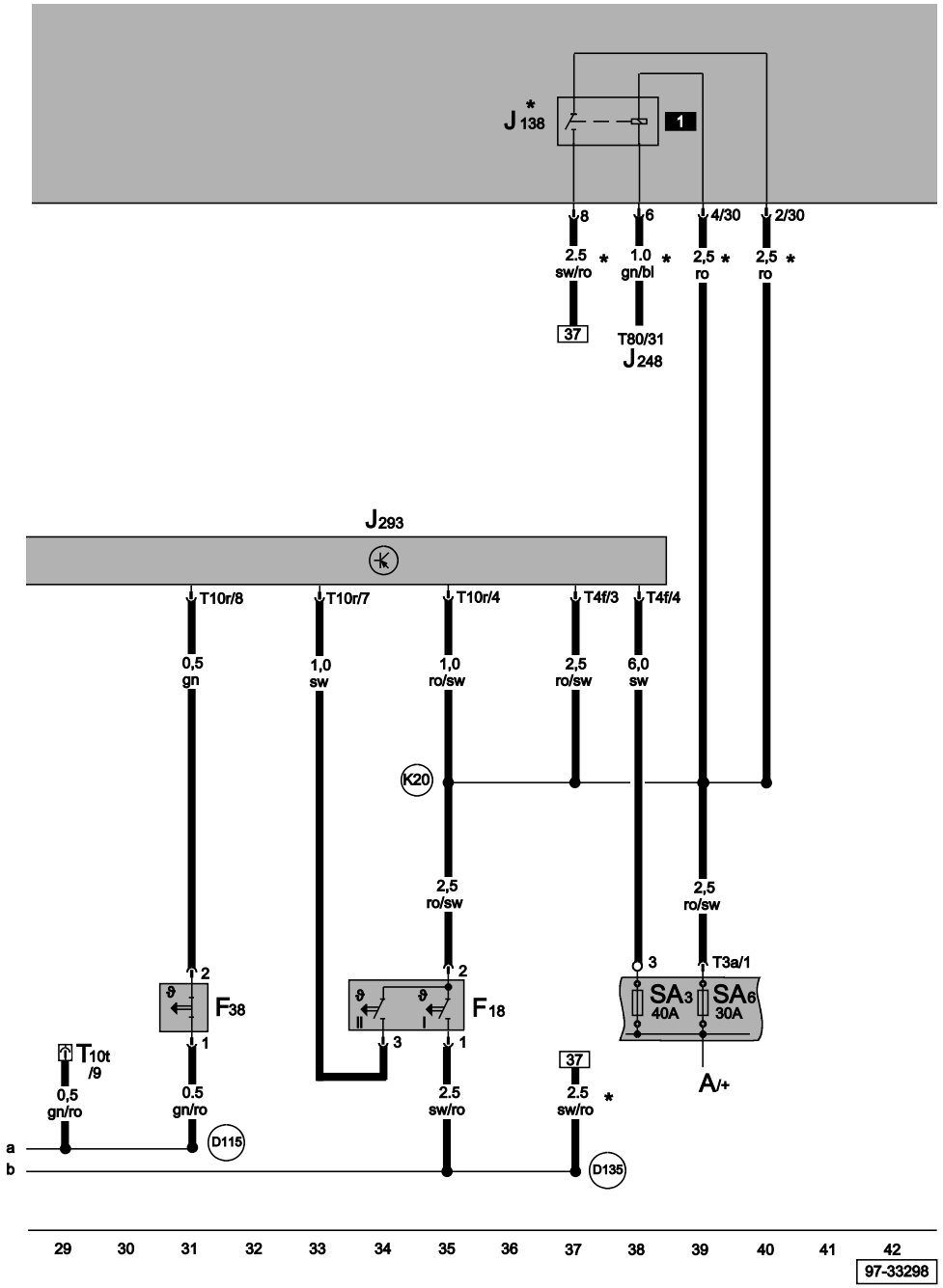

Radiator fan control unit, ambient temperature switch, radiator fan thermo-switch, high pressure sender

A	Battery
F18	Radiator fan thermo-switch
F38	Ambient temperature switch
J138	Radiator fan run-on control unit
J248	Diesel direct injection system control unit
J293	Radiator fan control unit
SA3	Fuse -3- on battery fuse box
SA6	Fuse -6- on battery fuse box
T3a	3-pin connector, on battery fuse box
T4f	4-pin connector, on radiator fan control unit
T10r	10-pin connector, on radiator fan control unit
T10t	10-pin connector, coupling station under relay carrier, left
T80	80-pin connector
D115	Connection -13-, in engine compartment wiring harness
D135	Connection (1st fan speed), in engine - headlight wiring harness
K20	Positive (+) connection -1- (30), in radiator fan wiring harness
*	Only for engine codes ASK, ASV

ws	=	white
sw	=	black
ro	=	red
br	=	brown
gn	=	green
bl	=	blue
gr	=	grey
li	=	purple
ge	=	yellow
or	=	orange
rs	=	pink

Protected by copyright. Copying for private or commercial purposes, in part or in whole, is not permitted unless authorised by Volkswagen AG. Copyright by Volkswagen AG. No liability with respect to the correctness of information in this document.
satelettronica

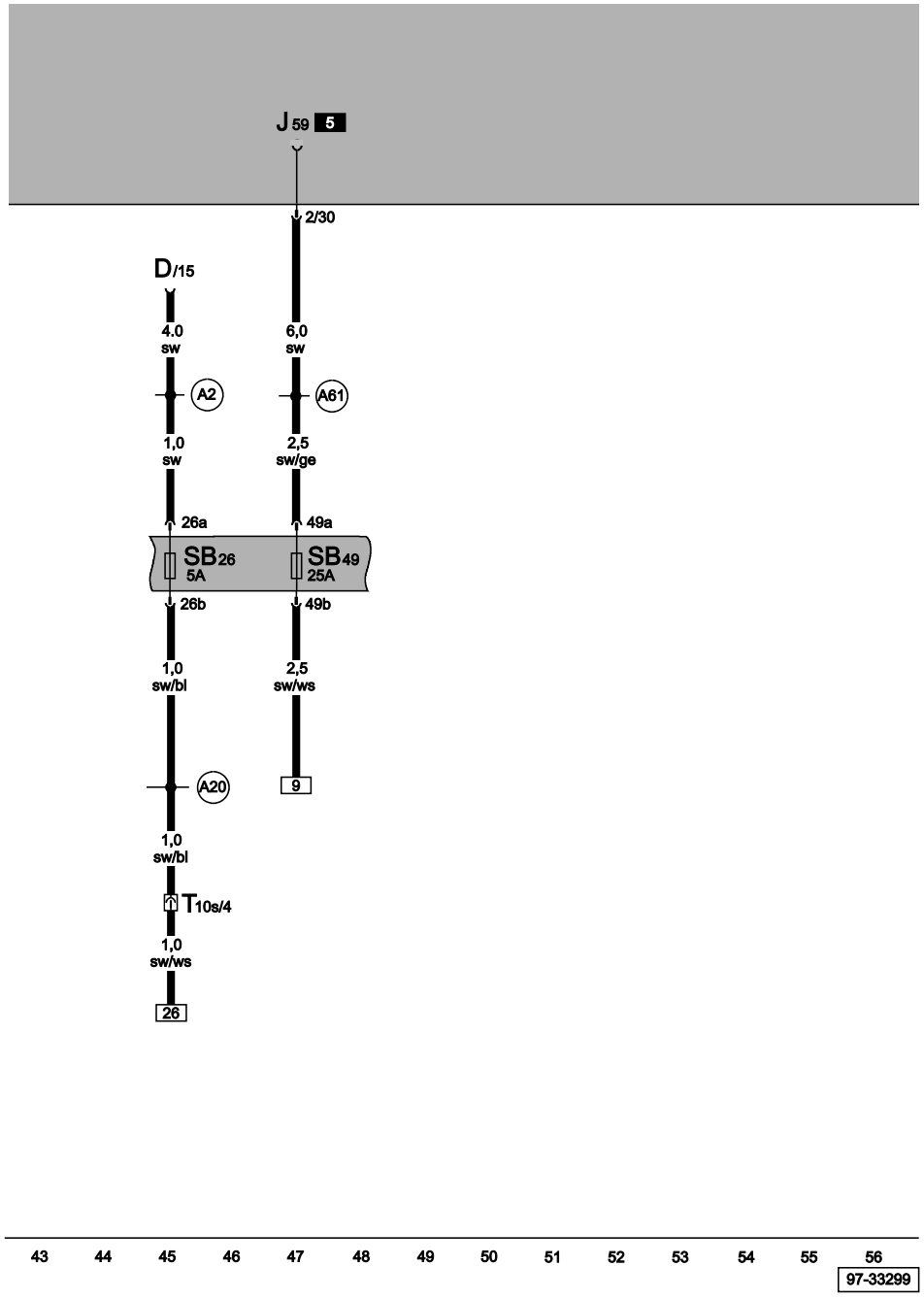

Fuses

D	Ignition/starter switch
J59	X contact relief relay
SB26	Fuse -26- on fuse box
SB49	Fuse -49- on fuse box
T10s	10-pin connector, coupling station under relay carrier, left
A2	Positive (+) connection (15), in dash panel wiring harness
A20	Positive (+) connection (15a), in dash panel wiring harness
A61	Positive (+) connection (X), in dash panel wiring harness

ws = white
sw = black
ro = red
br = brown
gn = green
bl = blue
gr = grey
li = purple
ge = yellow
or = orange
rs = pink

Protected by copyright. Copy for private or commercial purposes, in part or in whole, is not permitted unless authorised by Volkswagen AG. Volkswagen AG does not guarantee or accept any liability with respect to the correctness of information in this document. Copyright by Volkswagen AG.

satelettronica

Airbags system

⇒ Driver's and front passenger's airbag
⇒ Side airbags
⇒ Belt tensioners

From May 2001

For alternatives to relay and fuse positions as well as multi-pin connector wiring - see "Fitting locations" section.

Relay locations on the 11 position relay carrier:

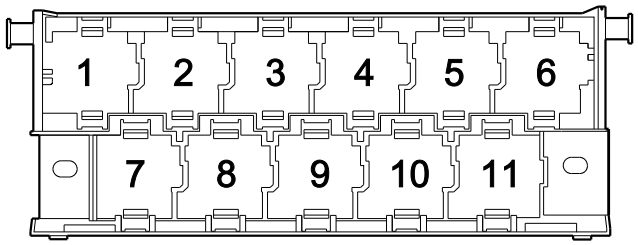

97-22850

11 - Fuel shut- off control unit (405)

Note:

♦ *The number in brackets behind the part designation denotes the control number on the housing.*

Fuse colours

30 A - green
25 A - white
20 A - yellow
15 A - blue
10 A - red
7.5 A - brown
5 A - beige
3 A - purple

Protected by copyright. Copying for private or commercial purposes, in part or in whole, is not permitted unless authorised by Volkswagen AG. Volkswagen AG does not guarantee or accept any liability with respect to the correctness of information in this document. Copyright by Volkswagen AG.
satelettronica

Airbag control unit, airbag coil connector, return spring with slip ring, side airbag crash sensor, driver's side, side airbag crash sensor, front passenger's side

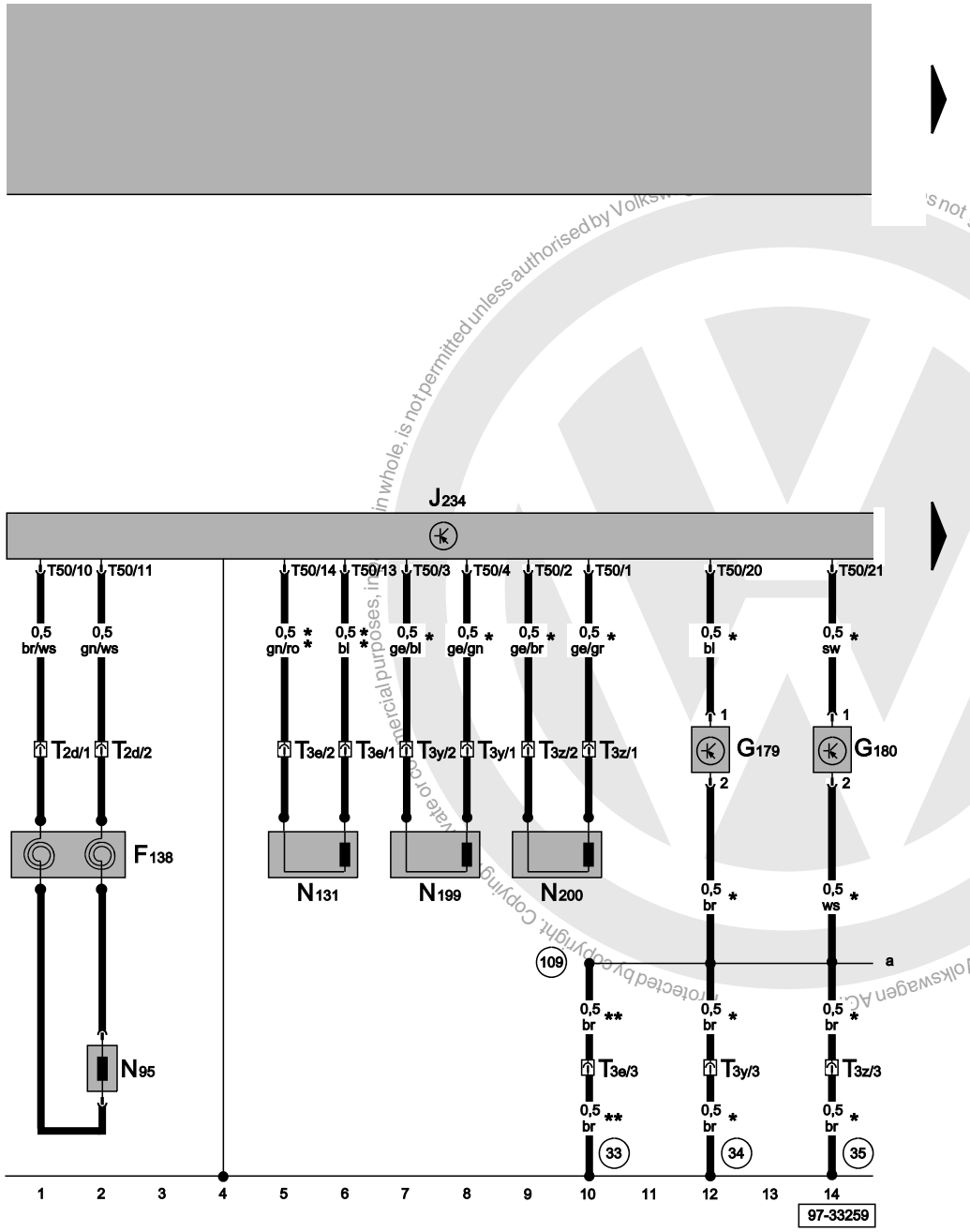

F138	Airbag coil connector, return spring with slip ring
G179	Side airbag crash sensor, driver's side
G180	Side airbag crash sensor, front passenger's side
J234	Airbag control unit
N95	Airbag igniter, driver's side
N131	Airbag igniter 1, front passenger's side
N199	Side airbag igniter, driver's side
N200	Side airbag igniter, front passenger's side
T2d	2-pin connector, yellow, in steering wheel
T3e	3-pin connector, behind glove box
T3y	3-pin connector, yellow, in driver's seat
T3z	3-pin connector, yellow, in front passenger's side
T50	50-pin connector
33	Earth point, on right behind dash panel
34	Earth point, under driver's seat
35	Earth point, under front passenger's seat
109	Earth connection, in airbag wiring harness
*	Only models with with side airbag
**	Only models with airbag - front passenger's side

ws	=	white
sw	=	black
ro	=	red
br	=	brown
gn	=	green
bl	=	blue
gr	=	grey
li	=	purple
ge	=	yellow
or	=	orange
rs	=	pink

satelettronica

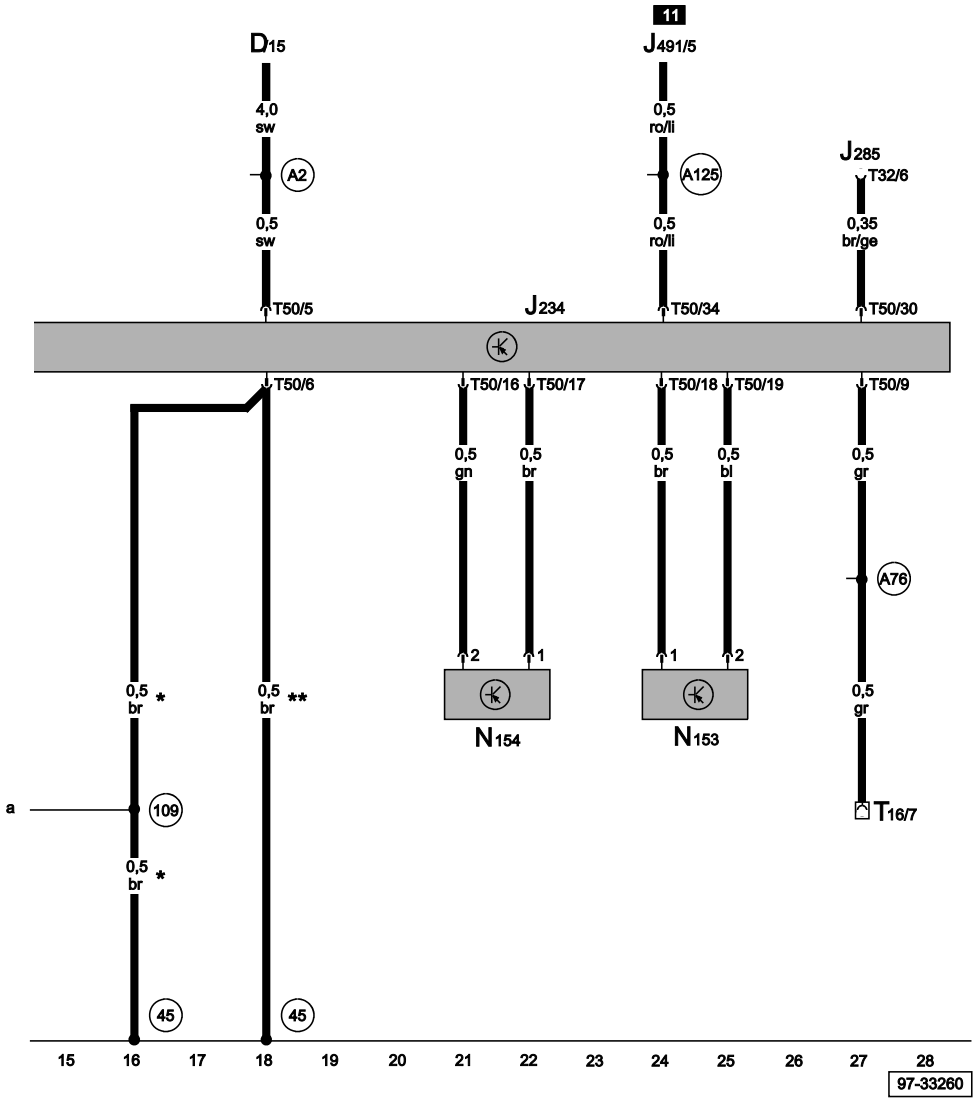

Airbag control unit, belt tensioner igniter -1-, driver's side, belt tensioner igniter -1-, front passenger's side

D	Ignition/starter switch
J234	Airbag control unit
J285	Control unit with display in dash panel insert
J491	Fuel shut-off control unit (crash)
N153	Belt tensioner igniter -1-, driver's side
N154	Belt tensioner igniter -1-, front passenger's side
T16	16-pin connector, diagnostic connector
T32	32-pin connector, blue, on dash panel insert
T50	50-pin connector
45	Earth point, behind dash panel - centre
109	Earth connection, in airbag wiring harness
A2	Positive (+) connection (15), in dash panel wiring harness
A76	Connection (diagnosis wire K), in dash panel wiring harness
A125	Connection (crash signal), in dash panel wiring harness
*	Only models with airbag - front passenger's side/side airbag
**	Only models without airbag - front passenger's side/side airbag

ws	=	white
sw	=	black
ro	=	red
br	=	brown
gn	=	green
bl	=	blue
gr	=	grey
li	=	purple
ge	=	yellow
or	=	orange
rs	=	pink

Protected by copyright. Copying for private or commercial purposes, in part or in whole, is not permitted unless authorised by Volkswagen AG. Volkswagen AG does not guarantee or accept any liability with respect to the correctness of information in this document. Copyright by Volkswagen AG.
satelettronica

Protected by copyright. Copying for private or commercial purposes, in part or in whole, is not permitted unless authorised by Volkswagen AG. Volkswagen AG does not guarantee or accept any liability with respect to the correctness of information in this document. Copyright by Volkswagen AG.

Four-speed automatic gearbox (AG4)

From May 2001

For alternatives to relay and fuse positions as well as multi-pin connector wiring - see "Fitting locations" section.

Relay locations on relay plate:

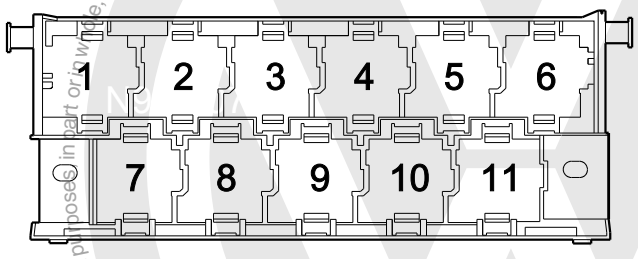

97-22850

3 - Starter inhibitor relay (175)

Note:

- *The number in brackets behind the part designation denotes the control number on the housing.*

Fuse colours

30 A - green
25 A - white
20 A - yellow
15 A - blue
10 A - red
7.5 A - brown
5 A - beige
3 A - purple

satelettronica

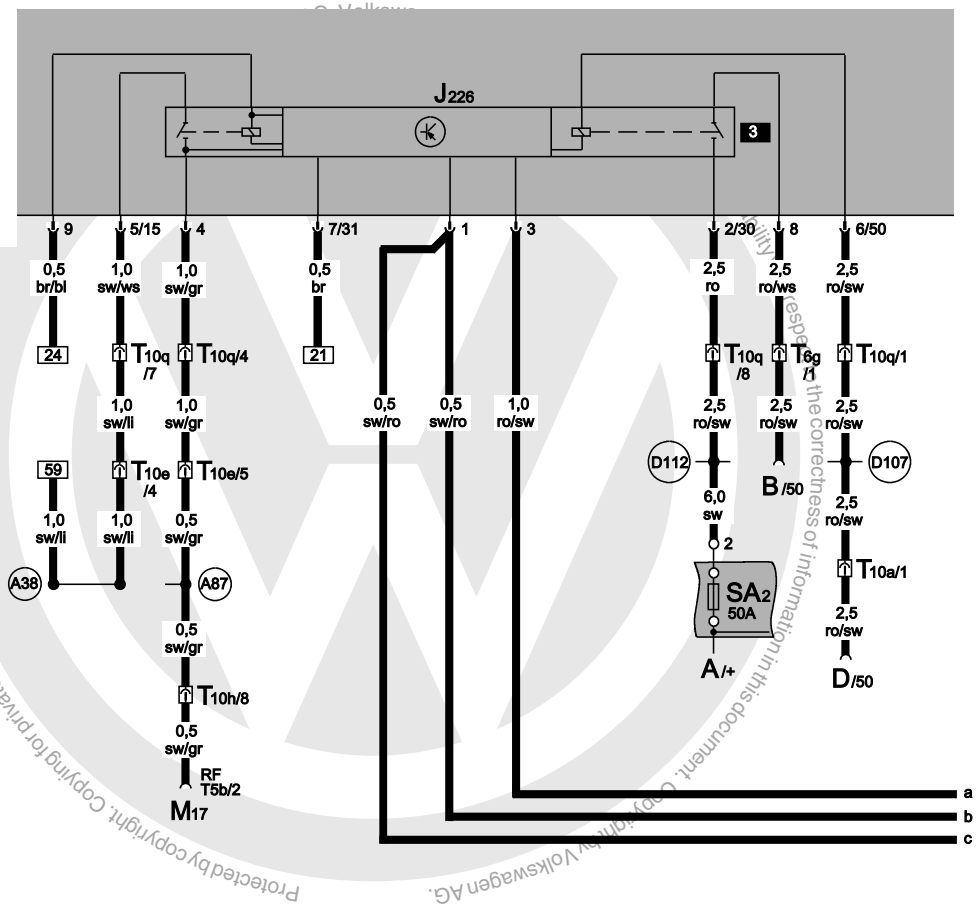

Starter inhibitor and reversing light relay

A	Battery
B	Starter
D	Ignition/starter switch
J226	Starter inhibitor and reversing light relay
M17	Reversing light bulb, right
SA2	Fuse -2- on battery fuse box
T5b	5-pin connector, on right tail light
T6g	6-pin connector, coupling station under relay carrier, left
T10a	10-pin connector, black, coupling station under relay carrier, left
T10e	10-pin connector, green, coupling station under relay carrier, left
T10h	10-pin connector, light green, coupling station under relay carrier, left
T10q	10-pin connector, blue, coupling station under relay carrier, left
A38	Positive (+) connection -2- (15a), in dash panel wiring harness
A87	Connection (reversing light), in dash panel wiring harness
D107	Connection -5-, in engine compartment wiring harness
D112	Connection -10-, in engine compartment wiring harness

ws	=	white
sw	=	black
ro	=	red
br	=	brown
gn	=	green
bl	=	blue
gr	=	grey
li	=	purple
ge	=	yellow
or	=	orange
rs	=	pink

1 2 3 4 5 6 7 8 9 10 11 12 13 14

97-33300

Protected by copyright. Copying for private or commercial purposes, in part or in whole, is not, without the consent of Volkswagen AG. No liability respecting the correctness of information in this document.

satelettronica

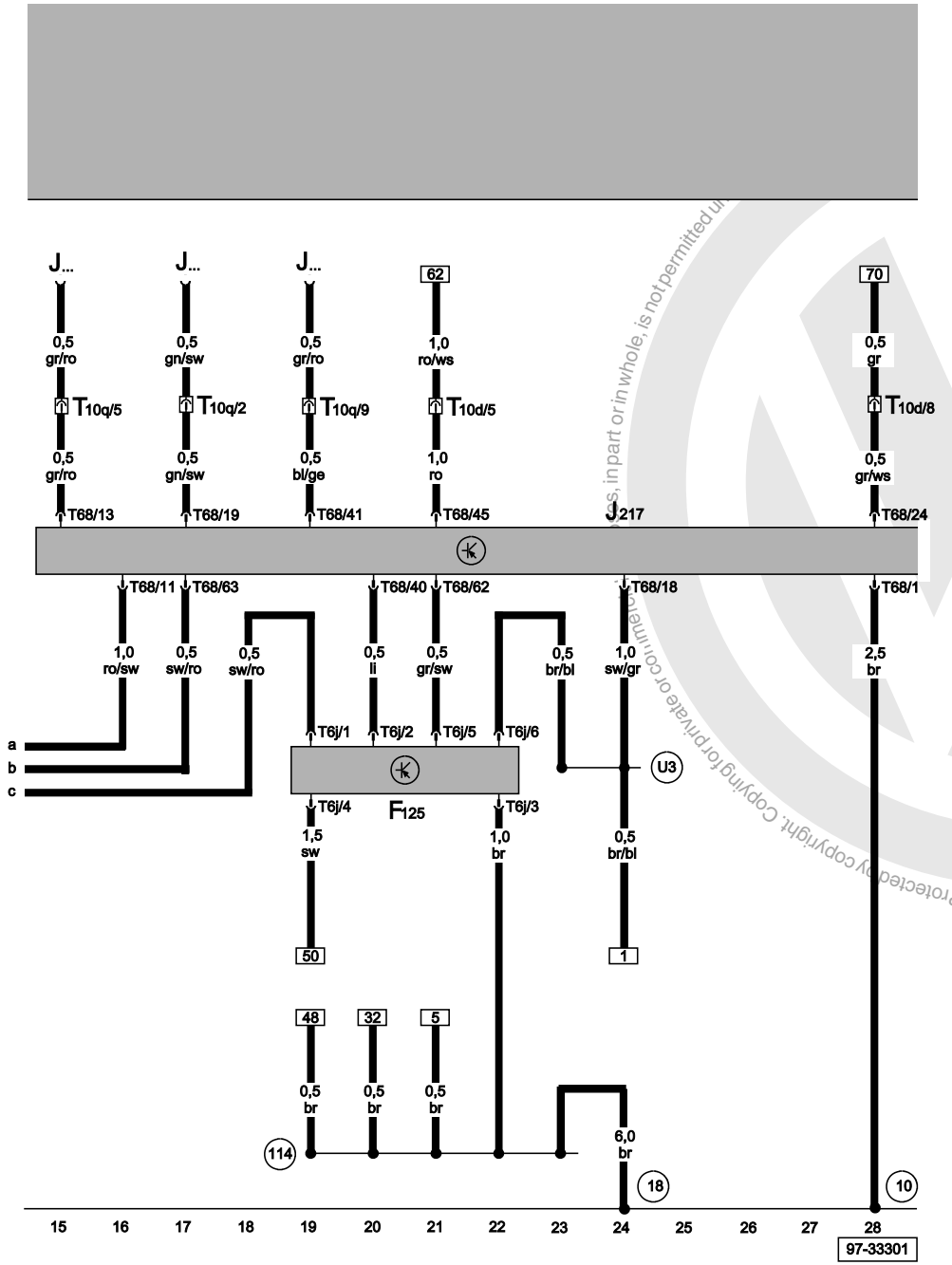

Automatic gearbox control unit, multi-function switch

F125	Multi-function switch
J...	Engine control units
J217	Automatic gearbox control unit
T6j	6-pin connector, on multi-function switch
T10d	10-pin connector, pink, coupling station under relay carrier, left
T10q	10-pin connector, blue, coupling station under relay carrier, left
T68	68-pin connector, on automatic gearbox control unit
10	Earth point, in plenum chamber
18	Earth point, on cylinder block
114	Earth connection, in automatic gearbox wiring harness
U3	Connection -1-, in automatic gearbox wiring harness

ws	=	white
sw	=	black
ro	=	red
br	=	brown
gn	=	green
bl	=	blue
gr	=	grey
li	=	purple
ge	=	yellow
or	=	orange
rs	=	pink

© Volkswagen AG does not guarantee or accept any liability with respect to the correctness of information in this document. Copyright by Volkswagen AG. Protected by copyright. Copying for private or commercial purposes, in part or in whole, is not permitted unless authorised by Volkswagen AG.
satelettronica

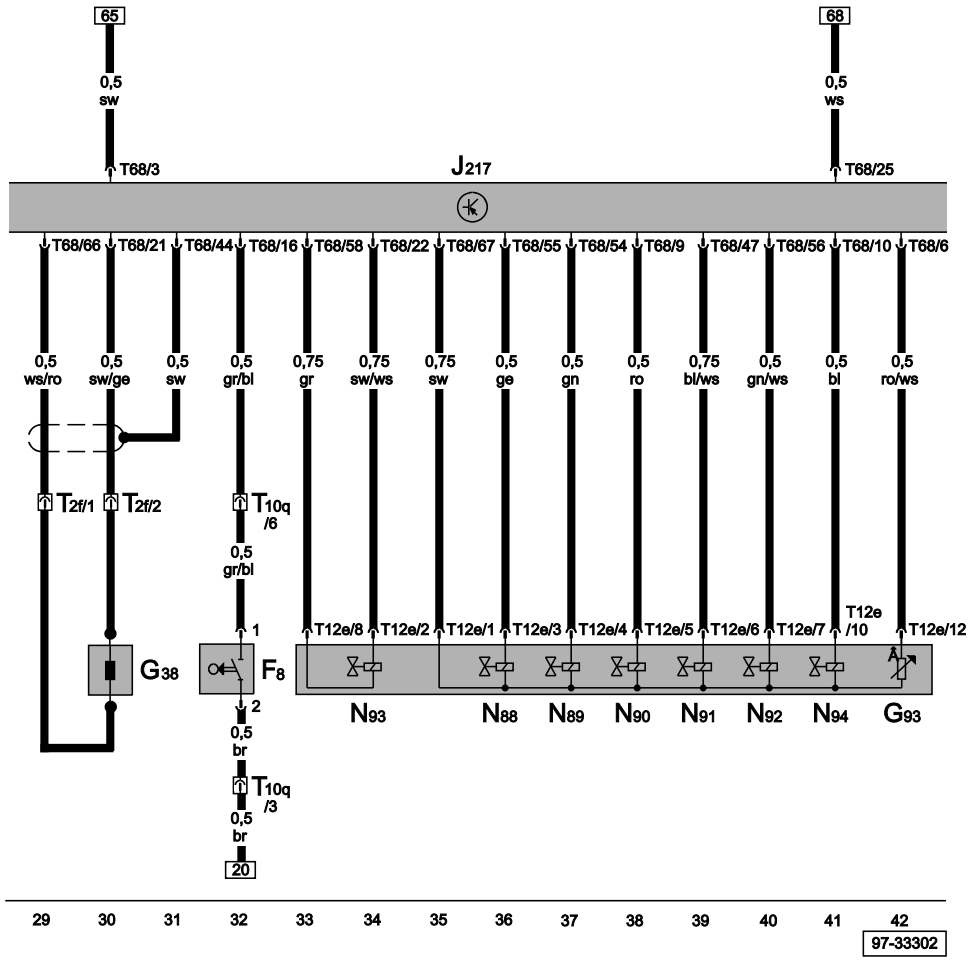

Automatic gearbox control unit, solenoid valve, gearbox speed sender, gearbox oil temperature sender

F8	Kick-down switch
G38	Gearbox speed sender
G93	Gearbox oil temperature sender
J217	Automatic gearbox control unit
N88	Solenoid valve 1
N89	Solenoid valve 2
N90	Solenoid valve 3
N91	Solenoid valve 4
N92	Solenoid valve 5
N93	Solenoid valve 6
N94	Solenoid valve 7
T2f	2-pin connector, on gearbox
T10q	10-pin connector, blue, coupling station under relay carrier, left
T12e	12-pin connector, on gearbox
T68	68-pin connector, on automatic gearbox control unit

ws = white
sw = black
ro = red
br = brown
gn = green
bl = blue
gr = grey
li = purple
ge = yellow
or = orange
rs = pink

Protected by copyright. Copying for private or commercial purposes, in part or in whole, is not permitted unless authorised by Volkswagen AG. Volkswagen AG does not guarantee or accept any liability with respect to the correctness of information in this document. Copyright by Volkswagen AG.
satelettronica

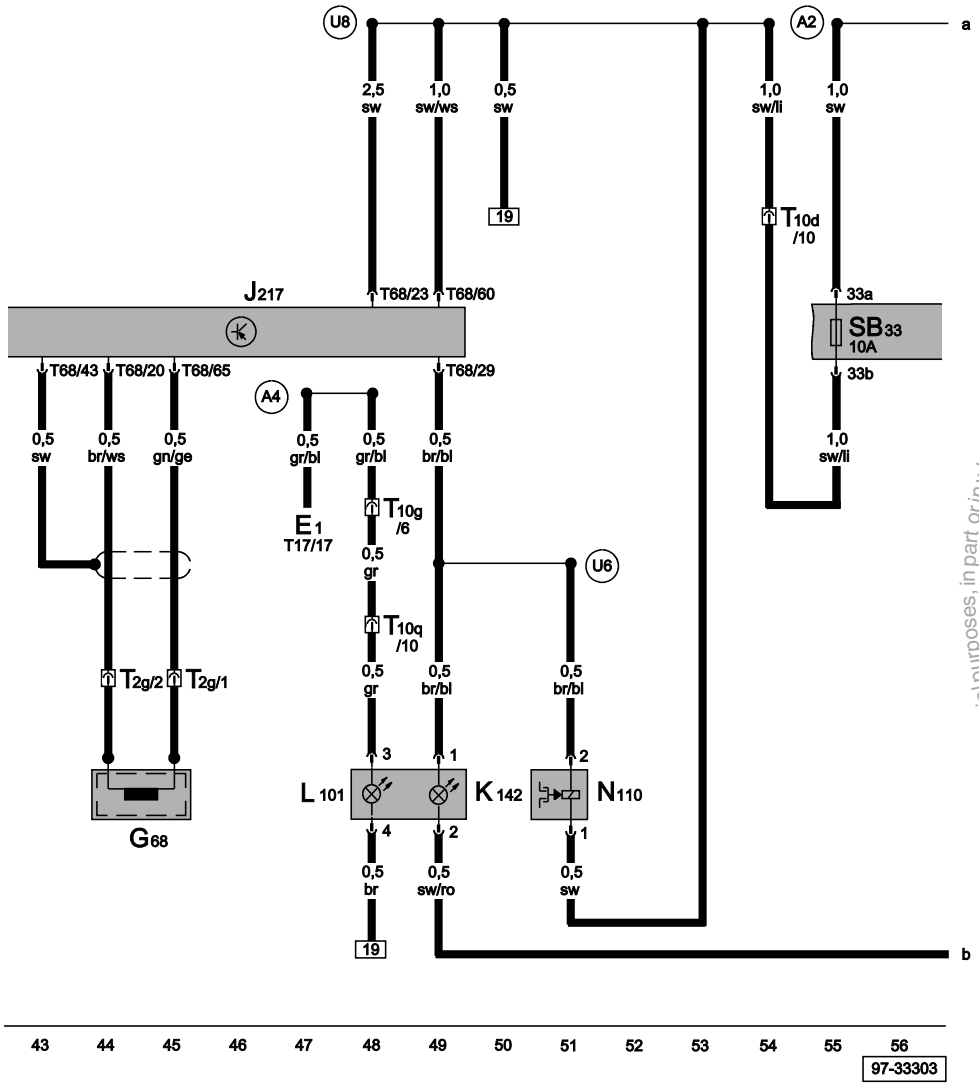

Automatic gearbox control unit, vehicle speed sender, selector lever lock solenoid

E1	Light switch
G68	Vehicle speed sender
J217	Automatic gearbox control unit
K142	Selector lever position P/N warning lamp
L101	Selector lever display illumination
N110	Selector lever lock solenoid
SB33	Fuse -33- on fuse box
T2g	2-pin connector, near gearbox speed sender
T10d	10-pin connector, pink, coupling station under relay carrier, left
T10g	10-pin connector, red, coupling station under relay carrier, left
T10q	10-pin connector, blue, coupling station under relay carrier, left
T17	17-pin connector, on light switch
T68	68-pin connector, on automatic gearbox control unit
A2	Positive (+) connection (15), in dash panel wiring harness
A4	Positive (+) connection (58b), in dash panel wiring harness
U6	Connection -2-, in automatic gearbox wiring harness
U8	Connection (15a), in automatic gearbox wiring harness

ws	=	white
sw	=	black
ro	=	red
br	=	brown
gn	=	green
bl	=	blue
gr	=	grey
li	=	purple
ge	=	yellow
or	=	orange
rs	=	pink

Protected by copyright. Copying for private or commercial purposes, in part or in whole, is not permitted unless authorised by Volkswagen AG. Volkswagen AG does not guarantee or accept any liability with respect to the correctness of information in this document. Copyright by Volkswagen AG.
satelettronica

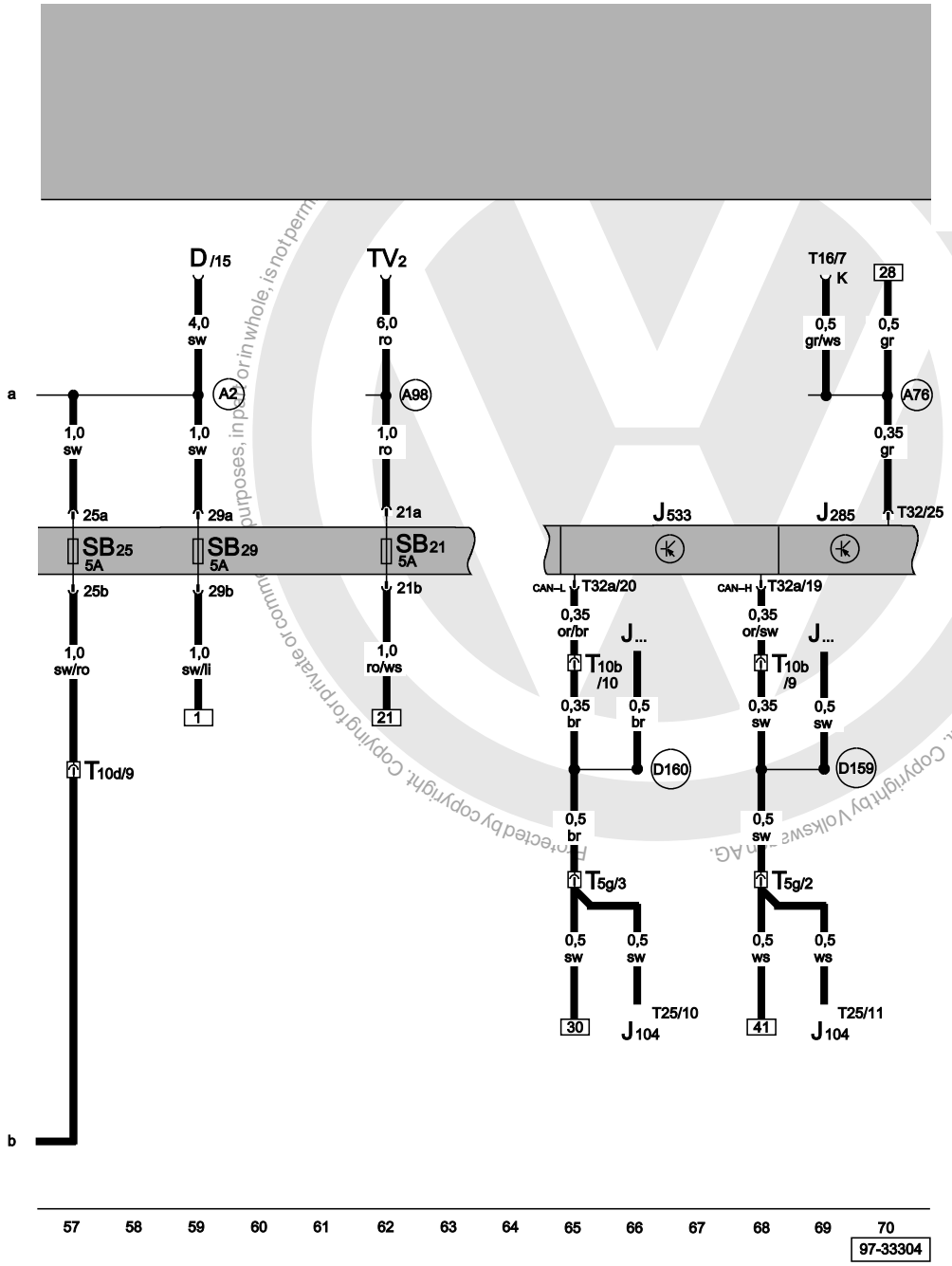

ws	=	white
sw	=	black
ro	=	red
br	=	brown
gn	=	green
bl	=	blue
gr	=	grey
li	=	purple
ge	=	yellow
or	=	orange
rs	=	pink

Fuses, data bus diagnostic interface

D	Ignition/starter switch
J...	Engine control units
J104	ABS with EDL control unit
J285	Control unit with display in dash panel insert
J533	Data bus diagnostic interface
SB21	Fuse -21- on fuse box
SB25	Fuse -25- on fuse box
SB29	Fuse -29- on fuse box
TV2	Terminal 30 junction box
T5g	5-pin connector, pink, coupling station under relay carrier, left
T10b	10-pin connector, white, coupling station under relay carrier, left
T10d	10-pin connector, white, in protective housing for connectors, on left in plenum chamber
T16	16-pin connector, diagnostic connector
T25	25-pin connector
T32	32-pin connector, blue, on dash panel insert
T32a	32-pin connector, green, on dash panel insert
A2	Positive (+) connection (15), in dash panel wiring harness
A76	Connection (diagnosis wire K), in dash panel wiring harness
A98	Positive (+) connection -4- (30), in dash panel wiring harness
D159	Connection (high bus), in engine compartment wiring harness
D160	Connection (low bus), in engine compartment wiring harness

satelettronica

1.9 l/50 kW naturally aspirated diesel engine, engine codes AGP, AQM

From May 2001

1.9 l/50 kW naturally aspirated diesel engine, engine codes AQM, From May 2001

For alternatives to relay and fuse positions as well as multi-pin connector wiring - see "Fitting locations" section.

Relay for coolant heater elements

Relay locations on relay plate:

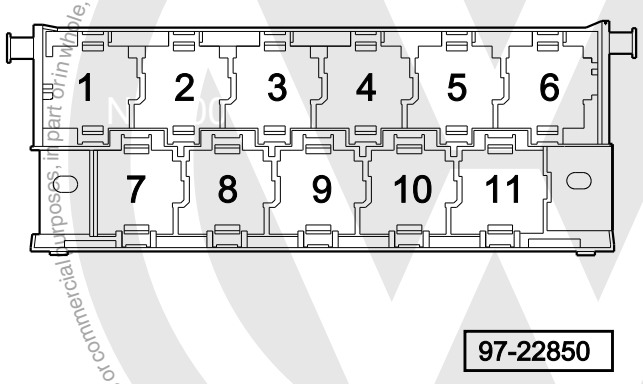

2 - Glow plug relay (103)
7 - Terminal 30 voltage supply relay
11 - Fuel shut-off control unit

Note:

- *The number in brackets behind the part designation denotes the control number on the housing.*

Fuse colours

30 A - green
25 A - white
20 A - yellow
15 A - blue
10 A - red
7.5 A - brown
5 A - beige
3 A - purple

satelettronica

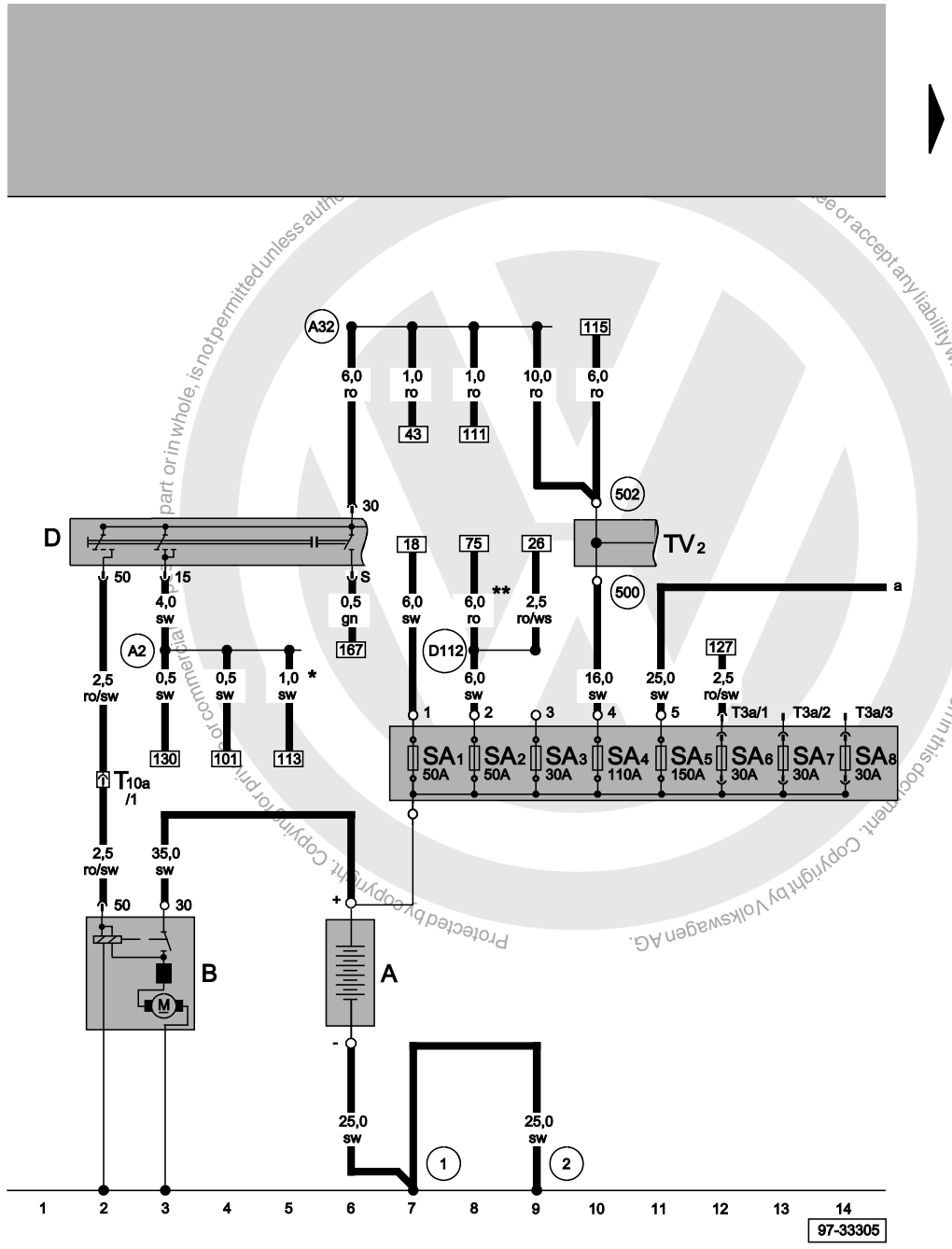

Starter, battery, ignition/starter switch, fuse box / battery

A	Battery
B	Starter
D	Ignition/starter switch
SA1	Fuse -1- on battery fuse box
SA2	Fuse -2- on battery fuse box
SA3	Fuse -3- on battery fuse box
SA4	Fuse -4- on battery fuse box
SA5	Fuse -5- on battery fuse box
SA6	Fuse -6- on battery fuse box
SA7	Fuse -7- on battery fuse box
SA8	Fuse -8- on battery fuse box
T3a	3-pin connector, on battery fuse box
T10a	10-pin connector, black, coupling station under relay carrier, left
TV2	Terminal 30 wiring junction
1	Earth strap, battery - body
2	Earth strap, gearbox - body
500	Screw connection -1- (30), on relay plate
502	Screw connection -1- (30a), on relay plate
A2	Positive (+) connection (15), in dash panel wiring harness
A32	Positive (+) connection (30), in dash panel wiring harness
D112	Connection -10-, in engine compartment wiring harness
*	Only models with airbags
**	Only models with heater for radiator

ws	=	white
sw	=	black
ro	=	red
br	=	brown
gn	=	green
bl	=	blue
gr	=	grey
li	=	purple
ge	=	yellow
or	=	orange
rs	=	pink

satelettronica

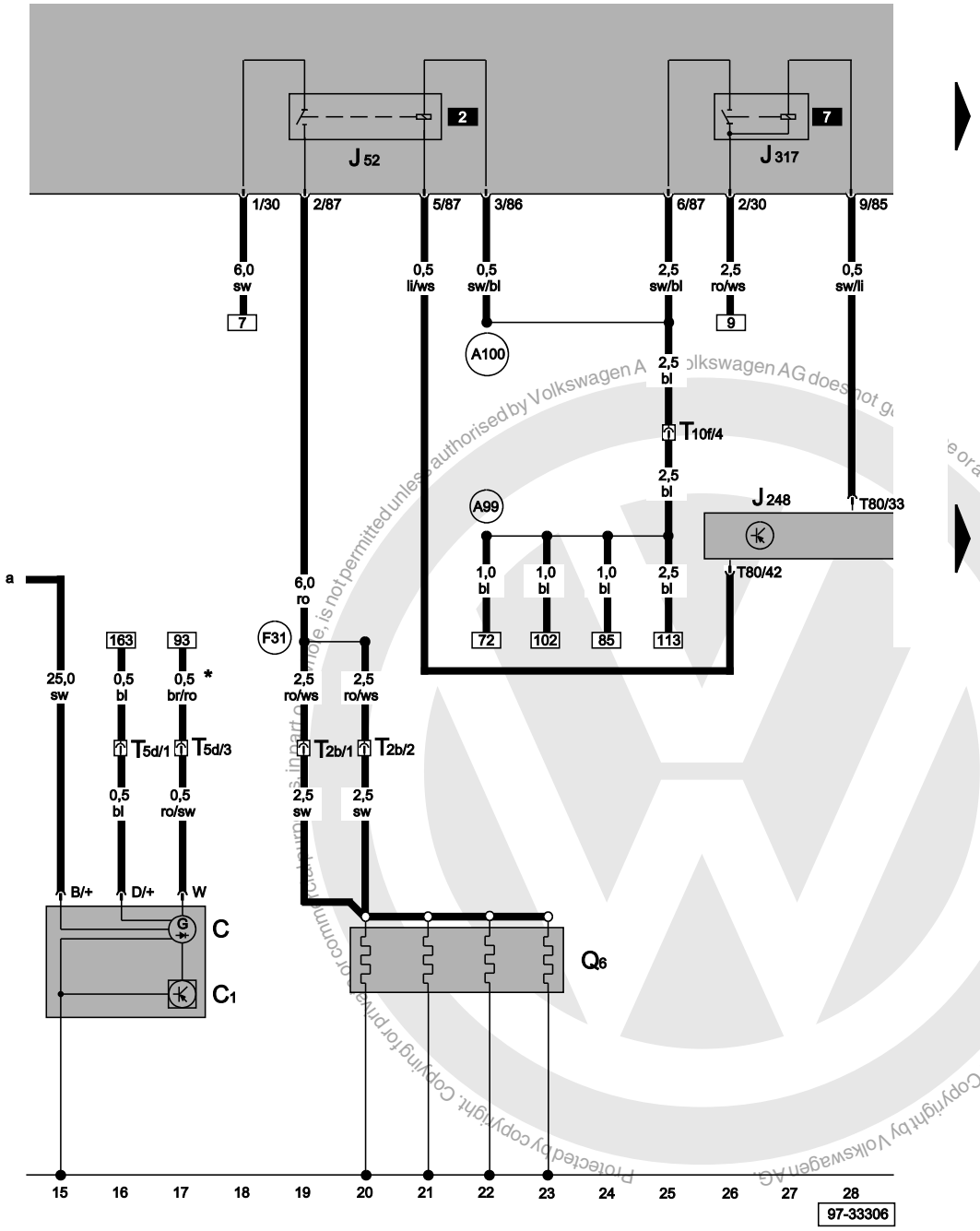

Diesel direct injection system control unit, alternator, voltage regulator, glow plugs (engine), relay for glow plugs, voltage supply relay

C	Alternator
C1	Voltage regulator
J52	Glow plug relay
J248	Diesel direct injection system control unit
J317	Terminal 30 voltage supply relay
Q6	Glow plugs - (engine)
T2b	2-pin connector, in engine compartment
T5d	5-pin connector, in engine compartment, near gearbox
T10f	10-pin connector, purple, coupling station under relay carrier, left
T80	80-pin connector
A99	Connection -1- (87), in dash panel wiring harness
A100	Connection -2- (87), in dash panel wiring harness
F31	Connection (glow plugs - engine) in diesel direct injection system wiring harness
*	Only models with heater for radiator

ws	=	white
sw	=	black
ro	=	red
br	=	brown
gn	=	green
bl	=	blue
gr	=	grey
li	=	purple
ge	=	yellow
or	=	orange
rs	=	pink

satelettronica

Diesel direct injection system control unit, accelerator pedal position sender, intake air temperature sender, kick-down switch, idling switch

F8	Kick-down switch
F60	Idling switch
G42	Intake air temperature sender
G79	Accelerator pedal position sender
J248	Diesel direct injection system control unit
T6e	6-pin connector, near accelerator pedal position sender
T80	80-pin connector
(167)	Earth connection -4-, in engine compartment wiring harness

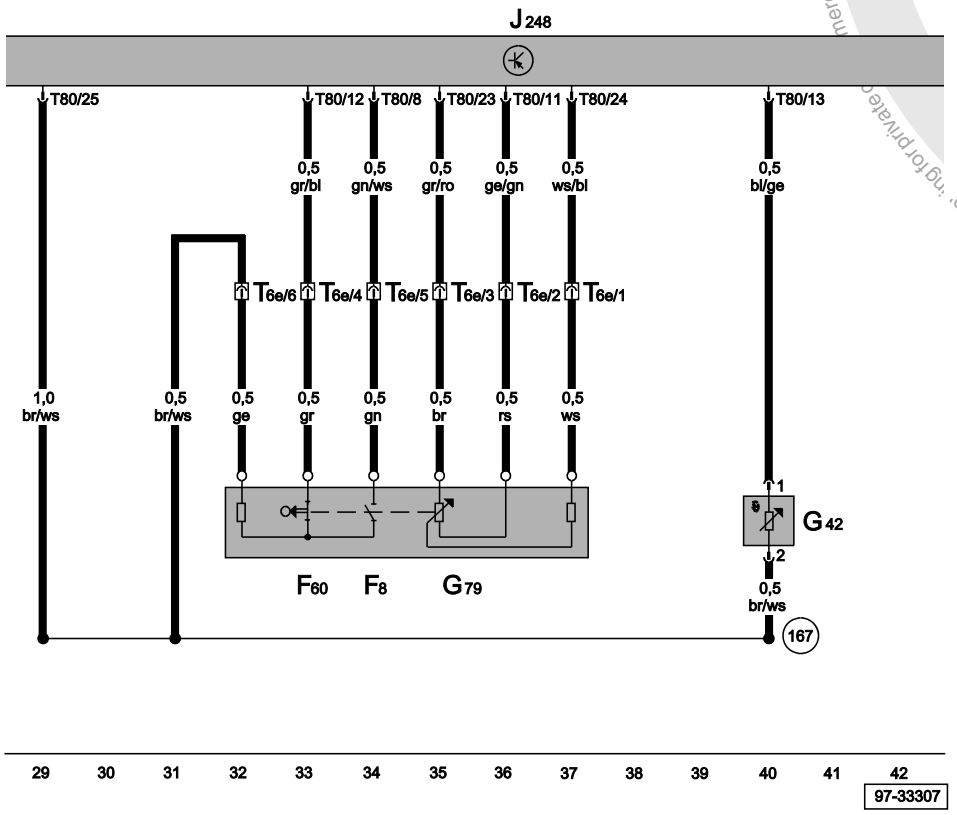

ws	=	white
sw	=	black
ro	=	red
br	=	brown
gn	=	green
bl	=	blue
gr	=	grey
li	=	purple
ge	=	yellow
or	=	orange
rs	=	pink

Protected by copyright. Copying for private or commercial purposes, in part or in whole, is not permitted unless authorised by Volkswagen AG. Volkswagen AG does not guarantee or accept any liability with respect to the correctness of information in this document. Copyright by Volkswagen AG.
satelettronica

Protected by copyright. Copying for private and commercial purposes, in any form or by any means, is not permitted without the authorised by Volkswagen AG. Volkswagen AG does not guarantee or accept any liability with respect to the correctness of information in this document. Copyright by Volkswagen AG.

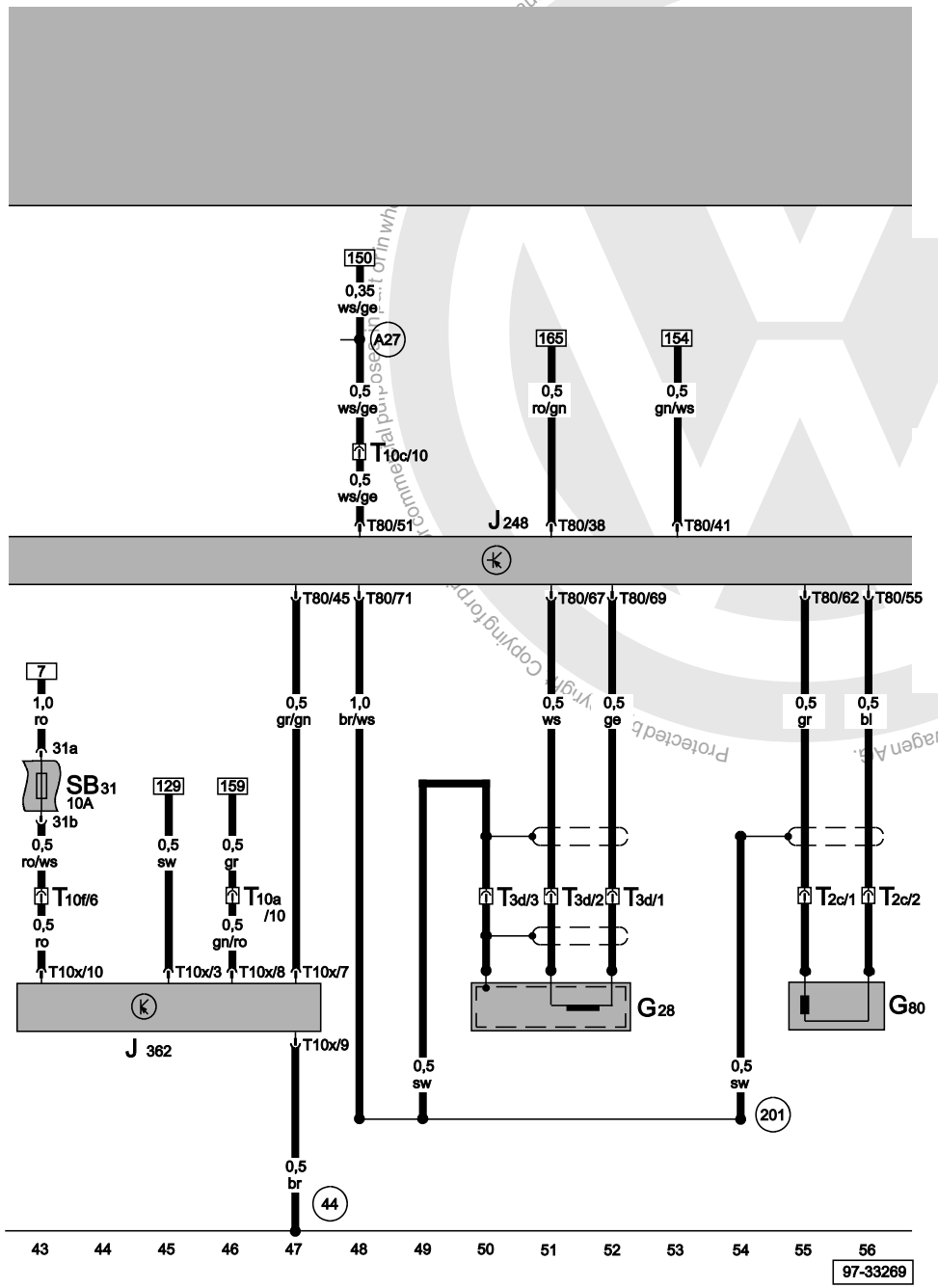

ws = white
sw = black
ro = red
br = brown
gn = green
bl = blue
gr = grey
li = purple
ge = yellow
or = orange
rs = pink

Diesel direct injection system control unit, engine speed sender, needle lift sender, immobilizer control unit

G28	Engine speed sender
G80	Needle lift sender
J248	Diesel direct injection system control unit
J362	Immobilizer control unit
SB31	Fuse -31- on fuse box
T2c	2-pin connector, near needle lift sender
T3d	3-pin connector, near engine speed sender
T10a	10-pin connector, black, coupling station under relay carrier, left
T10c	10-pin connector, brown, coupling station under relay carrier, left
T10f	10-pin connector, purple, coupling station under relay carrier, left
T10x	10-pin connector, on immobilizer control unit
T80	80-pin connector
44	Earth point, lower part of left A-pillar
201	Earth connection -5-, in engine compartment wiring harness
A27	Connection (speed signal), in dash panel wiring harness

satelettronica

Diesel direct injection system control unit, metering adjuster, exhaust gas recirculation valve, intake manifold flap change-over valve, fuel temperature sender, modulating piston movement sender

G81	Fuel temperature sender
G149	Modulating piston movement sender
J248	Diesel direct injection system control unit
N18	Exhaust gas recirculation valve
N146	Metering adjuster
N239	Intake manifold flap change-over valve
T10y	10-pin connector, blue, on part of left A-pillar
T80	80-pin connector
E30	Connection (87a), in engine wiring harness
F25	Connection -1-, in diesel direct injection system wiring harness

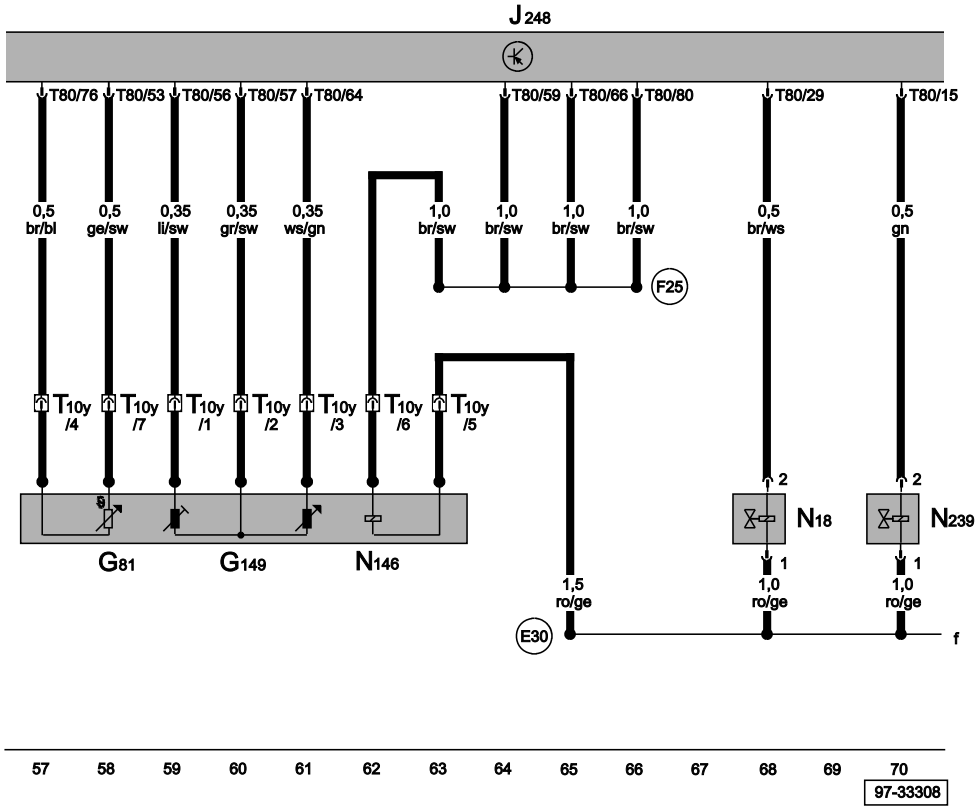

ws	=	white
sw	=	black
ro	=	red
br	=	brown
gn	=	green
bl	=	blue
gr	=	grey
li	=	purple
ge	=	yellow
or	=	orange
rs	=	pink

Protected by copyright. Copying for private or commercial purposes, in part or in whole, is not permitted unless authorised by Volkswagen AG. Volkswagen AG does not guarantee or accept any liability with respect to the correctness of information in this document. Copyright by Volkswagen AG.
satelettronica

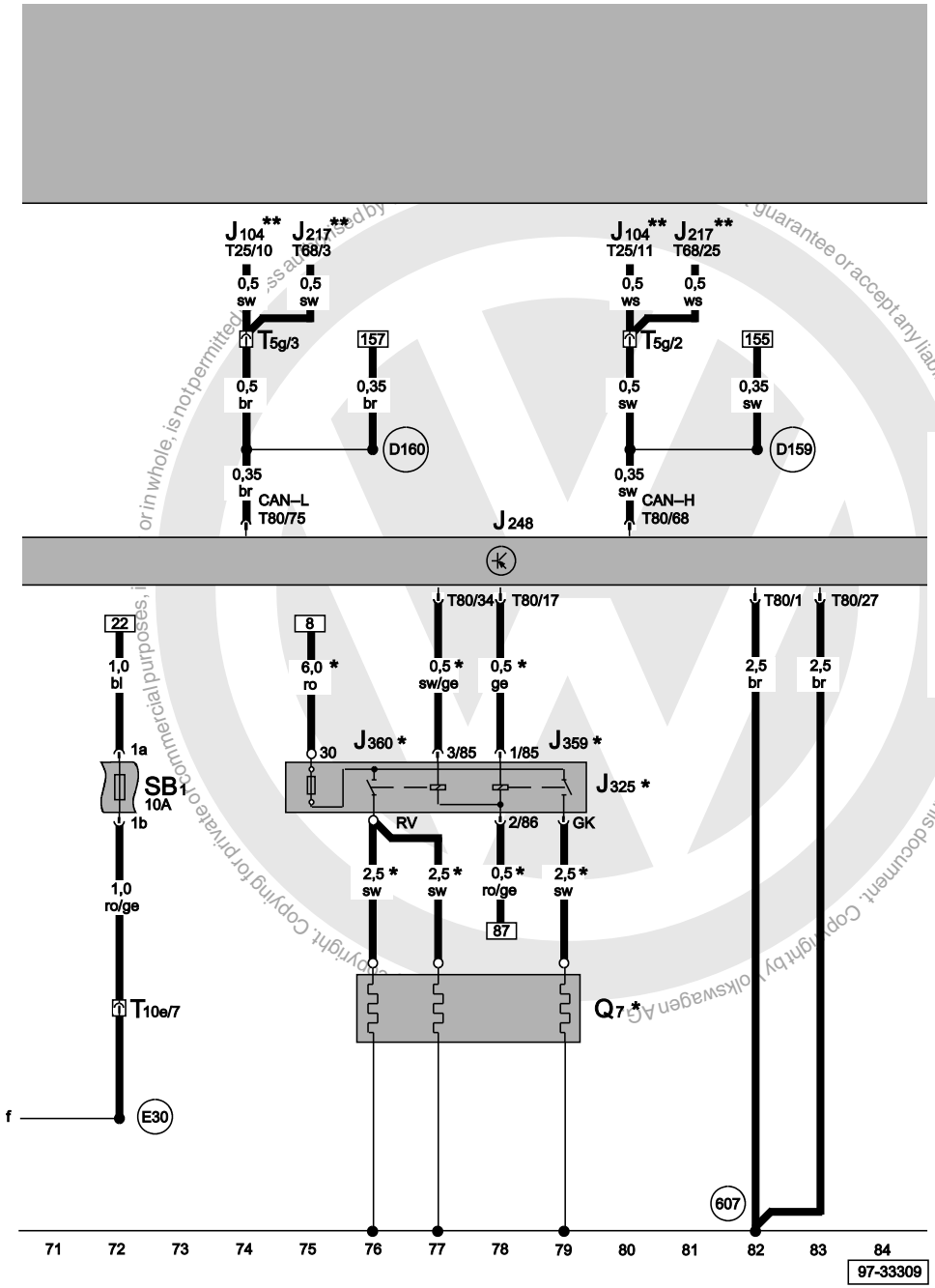

Diesel direct injection system control unit, coolant heater element relay, coolant heating elements

J104	ABS with EDL control unit
J217	Automatic gearbox control unit
J248	Diesel direct injection system control unit
J325	Relay for coolant heater elements, in engine
J359	Low heat output relay
J360	High heat output relay
Q7	Coolant heating elements
SB1	Fuse -1- on fuse box
T5g	5-pin connector, pink, coupling station under relay carrier, left
T10e	10-pin connector, green, coupling station under relay carrier, left
T25	25-pin connector
T68	68-pin connector
T80	80-pin connector
607	Earth point, on left in plenum chamber
E30	Connection (87a), in engine wiring harness
D159	Positive (+) connection (high bus), in interior wiring harness
D160	Positive (+) connection (low bus), in engine compartment wiring harness
*	Only models with heater for radiator
**	Depends on equipment

ws	=	white
sw	=	black
ro	=	red
br	=	brown
gn	=	green
bl	=	blue
gr	=	grey
li	=	purple
ge	=	yellow
or	=	orange
rs	=	pink

satelettronica

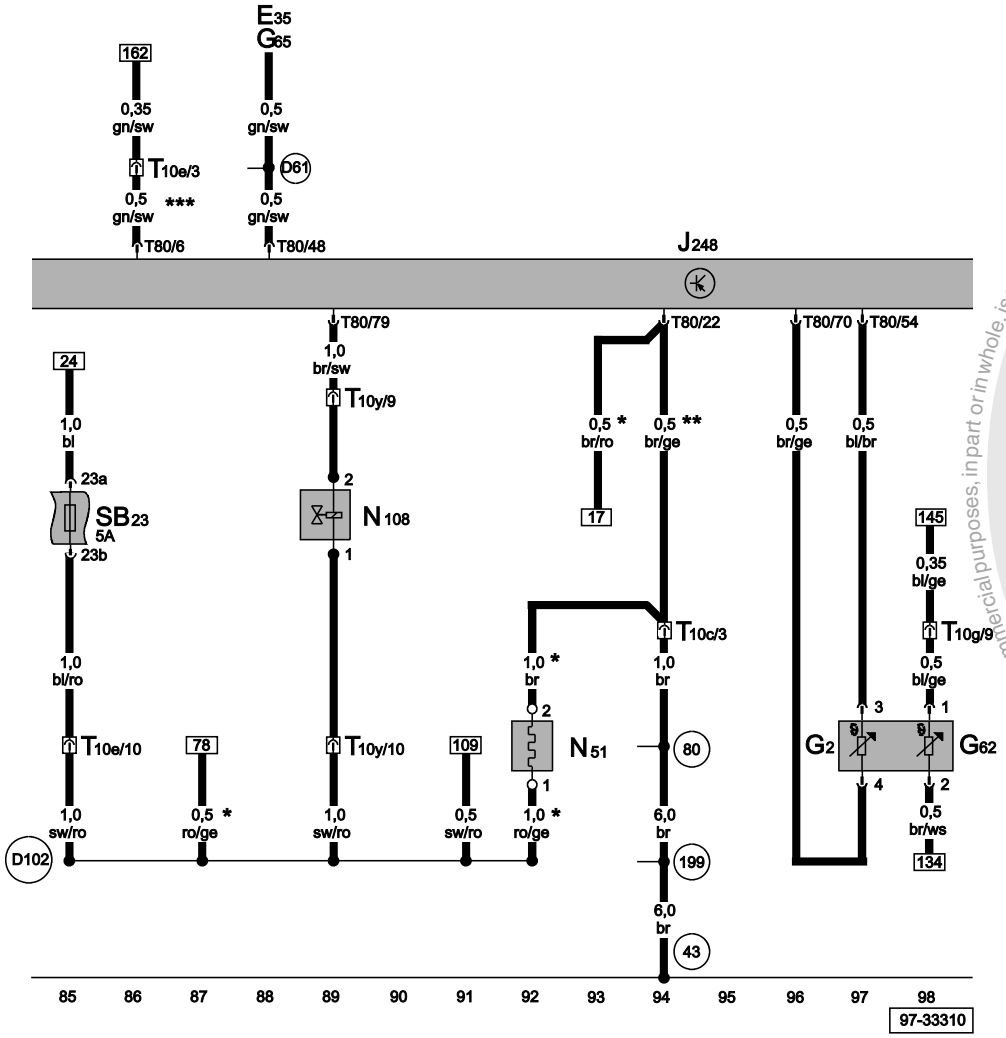

Diesel direct injection system control unit, coolant temperature sender, intake manifold preheating heater element, commencement of injection valve

E35	Air conditioner switch
G2	Coolant temperature sender
G62	Coolant temperature sender
G65	High pressure sender
J248	Diesel direct injection system control unit
N51	Intake manifold preheating heater element
N108	Commencement of injection valve
SB23	Fuse -23- on fuse box
T10c	10-pin connector, brown, coupling station under relay carrier, left
T10e	10-pin connector, green, coupling station under relay carrier, left
T10g	10-pin connector, red, coupling station under relay carrier, left
T10y	10-pin connector, blue, on part of left A-pillar
T80	80-pin connector
43	Earth point, lower part of right A-pillar
80	Earth connection -1-, in instruments wiring harness
199	Earth connection -3-, in dash panel wiring harness
D61	Connection (air conditioner), in engine compartment wiring harness
D102	Connection -2-, in engine compartment wiring harness
*	Only models with heater for radiator
**	Only models without heater for radiator
***	Engine speed signal from engine control unit

ws	=	white
sw	=	black
ro	=	red
br	=	brown
gn	=	green
bl	=	blue
gr	=	grey
li	=	purple
ge	=	yellow
or	=	orange
rs	=	pink

Protected by copyright. Copy, in part or in whole, is not permitted unless authorised by Volkswagen AG. Volkswagen AG does not guarantee or accept any liability with respect to the correctness of information in this document. Copyright by Volkswagen AG.
satelettronica

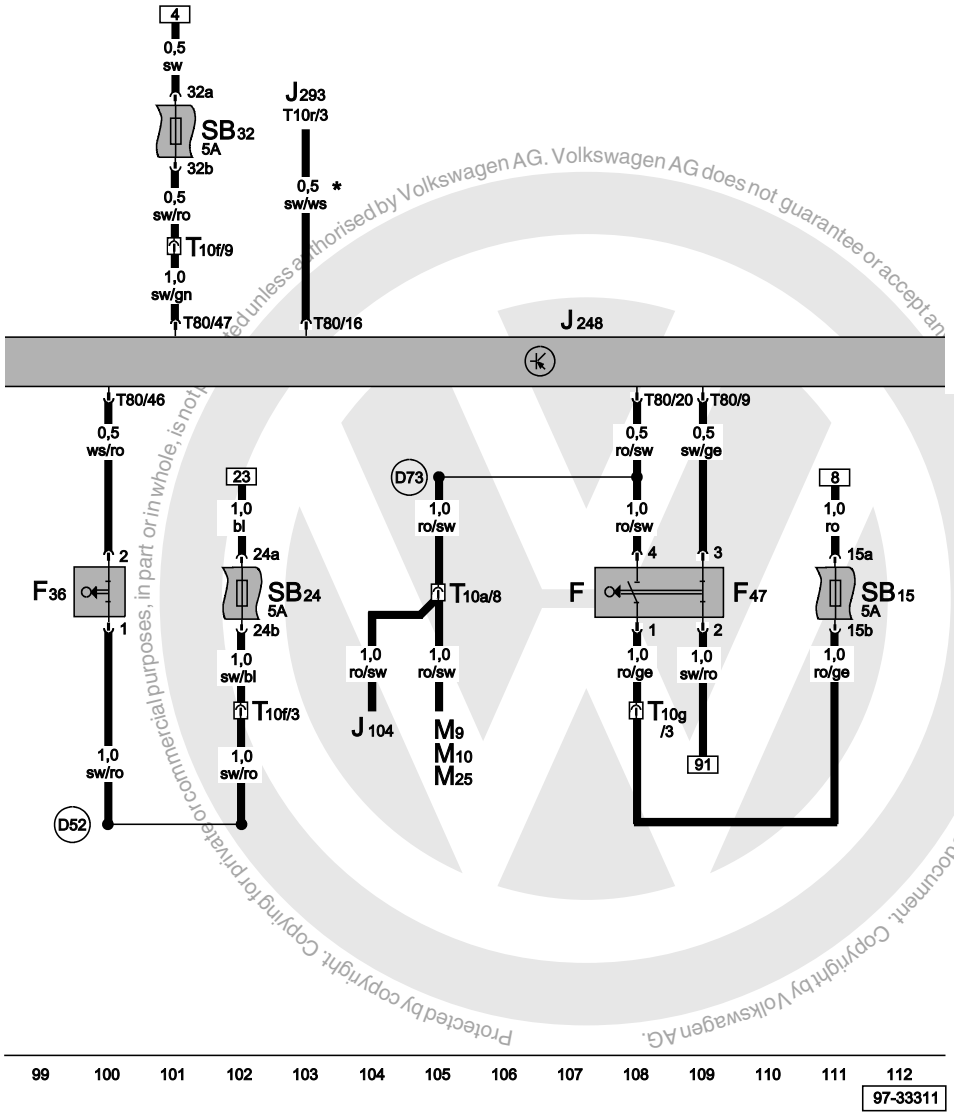

Diesel direct injection system control unit, brake light switch, clutch pedal switch, cruise control system brake pedal switch/diesel direct inj. system

F	Brake light switch
F36	Clutch pedal switch
F47	Cruise control system brake pedal switch (diesel direct injection system)
J104	ABS with EDL control unit
J248	Diesel direct injection system control unit
J293	Radiator fan control unit
M9	Brake light bulb, left
M10	Brake light bulb, right
M25	High level brake light bulb
SB15	Fuse -15- on fuse box
SB24	Fuse -24- on fuse box
SB32	Fuse -32- on fuse box
T10a	10-pin connector, black, coupling station under relay carrier, left
T10f	10-pin connector, purple, coupling station under relay carrier, left
T10g	10-pin connector, red, coupling station under relay carrier, left
T80	80-pin connector
D52	Positive (+) connection (15a), in engine compartment wiring harness
D73	Positive (+) connection (54), in engine compartment wiring harness
*	Only models with air conditioner

ws	=	white
sw	=	black
ro	=	red
br	=	brown
gn	=	green
bl	=	blue
gr	=	grey
li	=	purple
ge	=	yellow
or	=	orange
rs	=	pink

Protected by copyright. Copying for private or commercial purposes, in part or in whole, is not permitted unless authorised by Volkswagen AG. Volkswagen AG does not guarantee or accept any liability with respect to the correctness of information in this document. Copyright by Volkswagen AG.

satelettronica

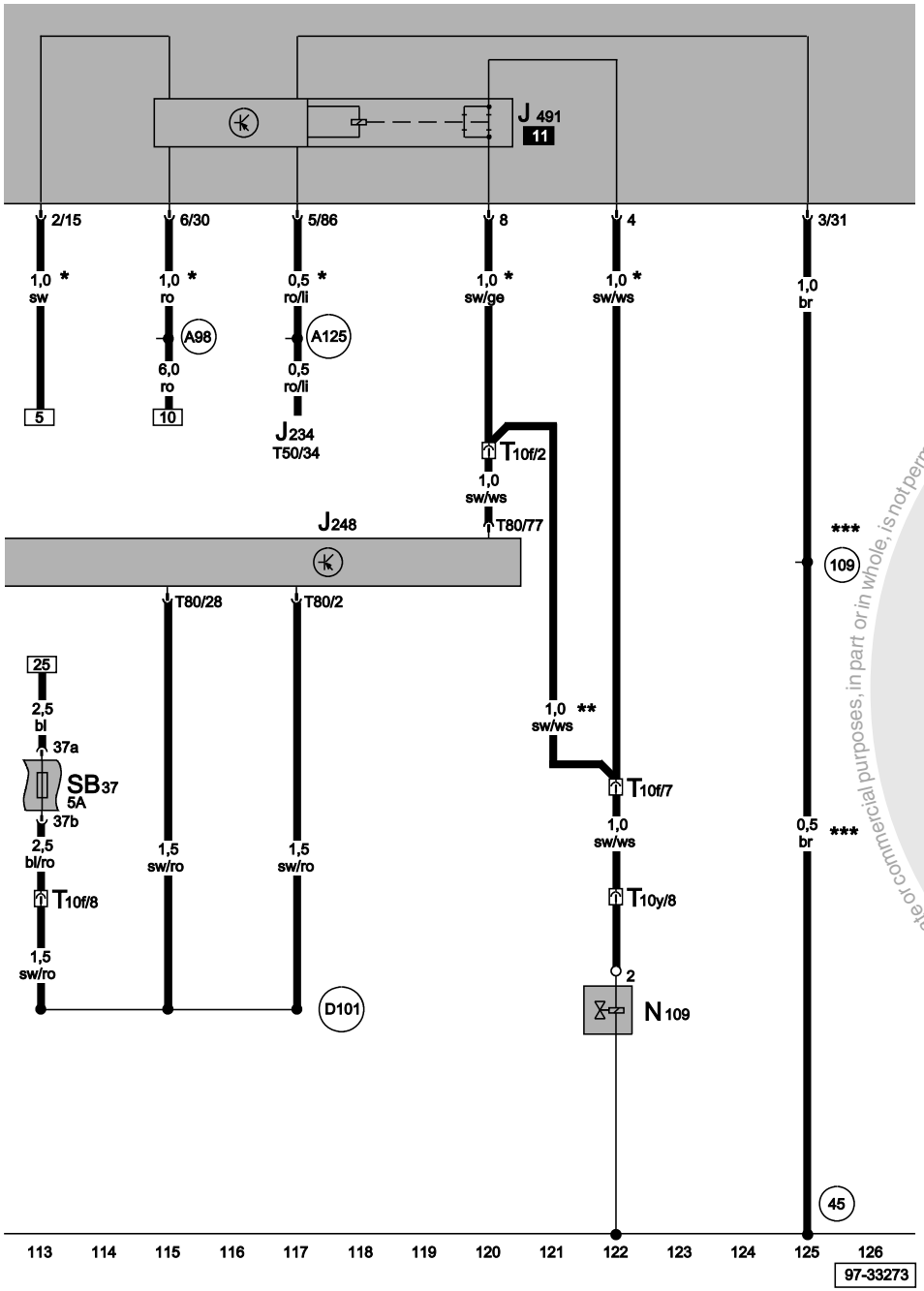

Diesel direct injection system control unit, fuel shut-off control unit (Crash), fuel shut-off valve

J234	Airbag control unit
J248	Diesel direct injection system control unit
J491	Fuel shut-off control unit (crash)
N109	Fuel shut-off valve
SB37	Fuse -37- on fuse box
T10f	10-pin connector, purple, coupling station under relay carrier, left
T10y	10-pin connector, blue, on part of left A-pillar
T50	50-pin connector
T80	80-pin connector
45	Earth point, behind dash panel - centre
109	Earth connection, in airbag wiring harness
A98	Positive (+) connection -4- (30), in dash panel wiring harness
A125	Connection (crash signal), in dash panel wiring harness
D101	Connection -1-, in engine compartment wiring harness
*	Only models with airbags
**	Only models without airbags
***	Does not models with driver airbag

ws	=	white
sw	=	black
ro	=	red
br	=	brown
gn	=	green
bl	=	blue
gr	=	grey
li	=	purple
ge	=	yellow
or	=	orange
rs	=	pink

Protected by copyright. Copying for private or commercial purposes, in part or in whole, is not permitted unless authorised by Volkswagen AG. Volkswagen AG does not guarantee or accept any liability with respect to the correctness of information in this document. Copyright by Volkswagen AG.
satelettronica

Oil pressure switch, fuel gauge sender, speedometer sender, radiator fan, radiator fan thermo-switch

G	Fuel gauge sender
G22	Speedometer sender (Hall sender, on gearbox)
F1	Oil pressure switch
F18	Radiator fan thermo-switch
SB28	Fuse -28- on fuse box
T3b	3-pin connector, on radiator fan
T10c	10-pin connector, brown, coupling station under relay carrier, left
T10e	10-pin connector, green, coupling station under relay carrier, left
T10i	10-pin connector, orange, coupling station under relay carrier, left
V7	Radiator fan
12	Earth point, left in engine compartment
269	Earth connection (sender earth) -1-, in dash panel wiring harness
608	Earth point, in centre of plenum chamber

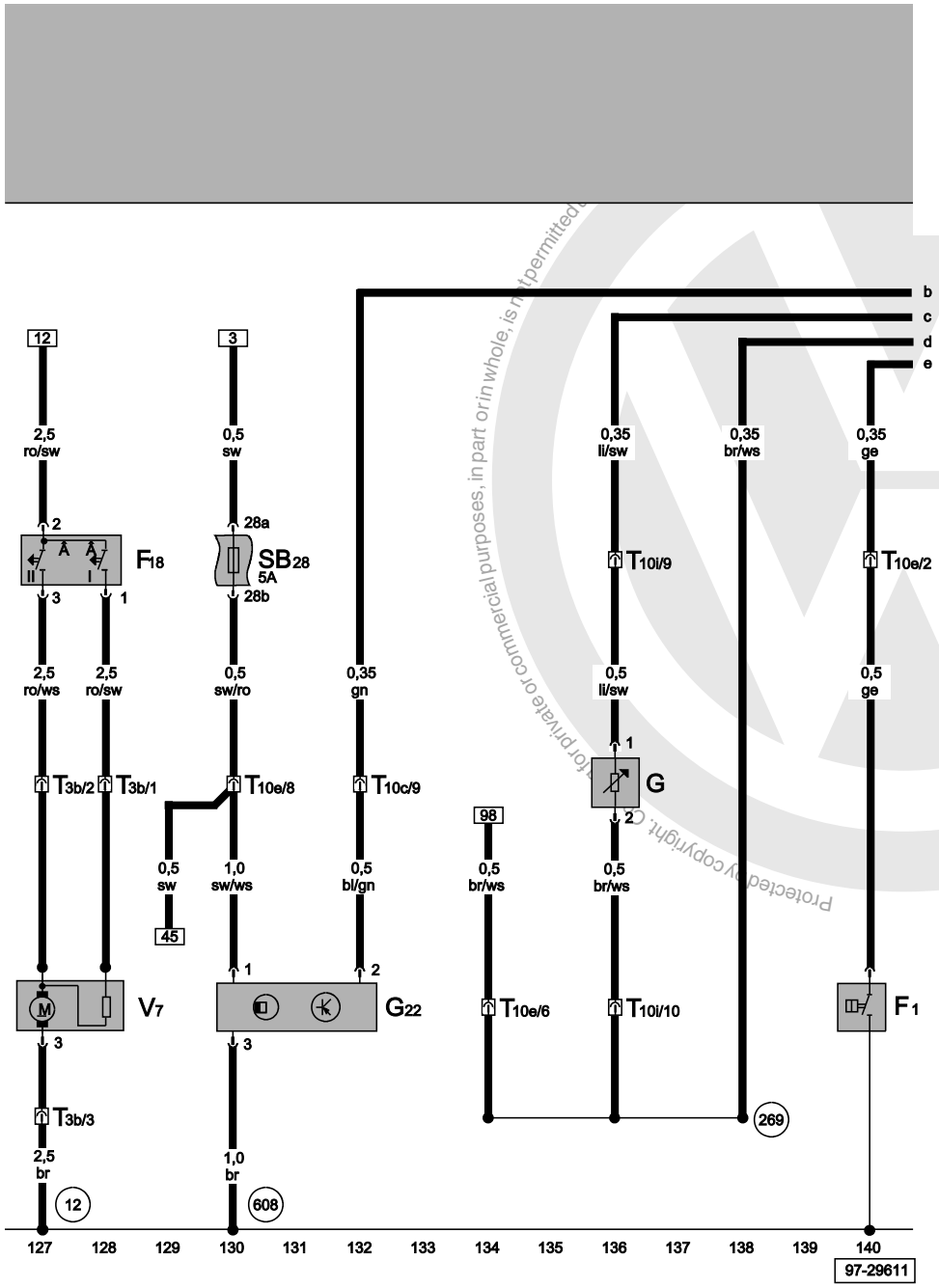

ws	=	white
sw	=	black
ro	=	red
br	=	brown
gn	=	green
bl	=	blue
gr	=	grey
li	=	purple
ge	=	yellow
or	=	orange
rs	=	pink

Protected by copyright. Copyright by Volkswagen AG. Volkswagen AG does not guarantee or accept any liability with respect to the correctness of information in this document. Copyright by Volkswagen AG. Not for private or commercial purposes, in part or in whole, is not permitted.
satelettronica

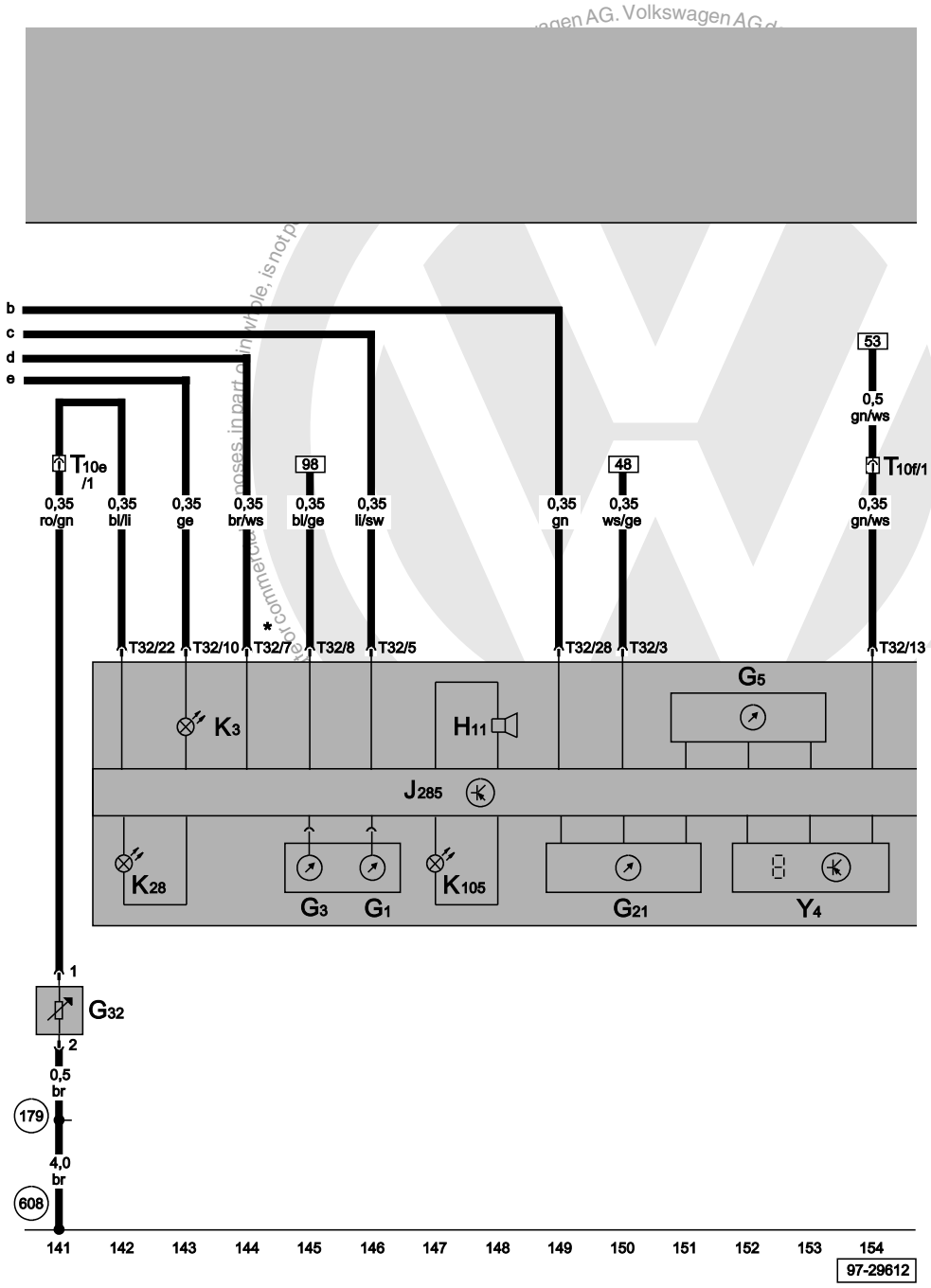

Control unit with display in dash panel insert, coolant shortage indicator sender, oil pressure warning lamp

G1	Fuel gauge
G3	Coolant temperature gauge
G5	Rev. counter
G21	Speedometer
G32	Coolant shortage indicator sender
H11	Oil pressure warning buzzer
J285	Control unit with display in dash panel insert
K3	Oil pressure warning lamp
K28	Coolant temperature/coolant shortage warning lamp
K105	Reserve fuel warning lamp
T10e	10-pin connector, green, coupling station under relay carrier, left
T10f	10-pin connector, purple, coupling station under relay carrier, left
T32	32-pin connector, blue, on dash panel insert
Y4	Odometer display
179	Earth connection, in left headlight wiring harness
608	Earth point, in centre of plenum chamber
*	Output for signal earth

ws	=	white
sw	=	black
ro	=	red
br	=	brown
gn	=	green
bl	=	blue
gr	=	grey
li	=	purple
ge	=	yellow
or	=	orange
rs	=	pink

satelettronica

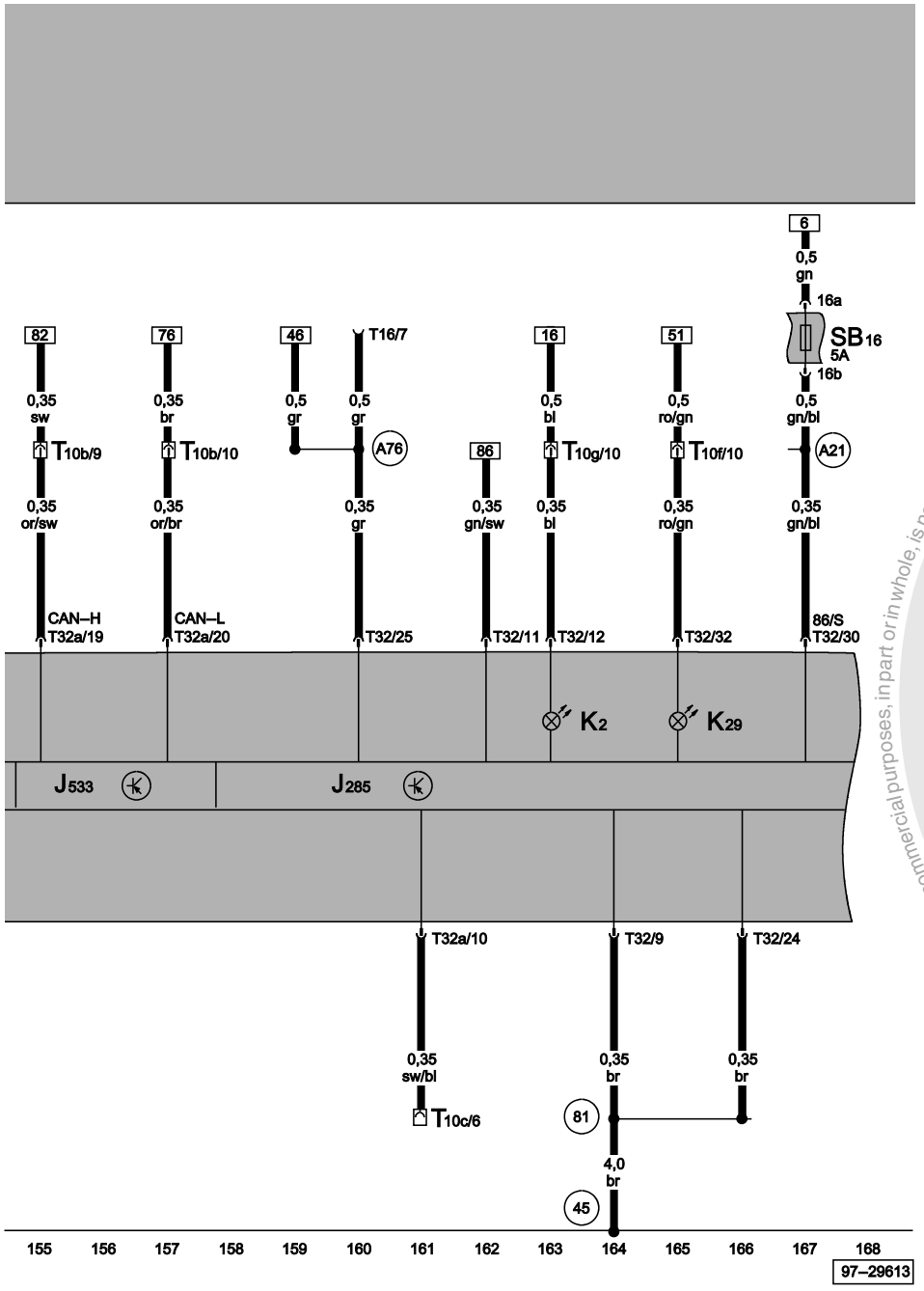

Control unit with display in dash panel insert, diagnostic connector, alternator warning lamp, glow period warning lamp

J285	Control unit with display in dash panel insert
J533	Data bus diagnostic interface
K2	Alternator warning lamp
K29	Glow period warning lamp
SB16	Fuse -16- on fuse box
T10b	10-pin connector, white, coupling station under relay carrier, left
T10c	10-pin connector, brown, coupling station under relay carrier, left
T10f	10-pin connector, purple, coupling station under relay carrier, left
T10g	10-pin connector, red, coupling station under relay carrier, left
T16	16-pin connector, diagnostic connector
T32	32-pin connector, blue, on dash panel insert
T32a	32-pin connector, green, on dash panel insert
45	Earth point, behind dash panel - centre
81	Earth connection -1-, in dash panel wiring harness
A21	Connection (86s), in dash panel wiring harness
A76	Connection (diagnosis wire K), in dash panel wiring harness

ws	=	white
sw	=	black
ro	=	red
br	=	brown
gn	=	green
bl	=	blue
gr	=	grey
li	=	purple
ge	=	yellow
or	=	orange
rs	=	pink

Protected by copyright. Copying for private or commercial purposes, in part or in whole, is not permitted unless authorised by Volkswagen AG. Volkswagen AG does not guarantee or accept any liability with respect to the correctness of information in this document. Copyright by Volkswagen AG.

satelettronica

1.9 l turbo-diesel engine/ 81 kW, engine codes ASK, ASV
From May 2001

1.9 l/66 kW turbo-diesel engine, engine codes AGR, ALH
From May 2001

1.9 l/66 kW turbo-diesel engine, engine codes ALH, From May 2001

1.9 l turbo-diesel engine/ 81 kW, engine codes ASK, From May 2001

For alternatives to relay and fuse positions as well as multi-pin connector wiring - see "Fitting locations" section.

Relay for coolant heater elements

Relay locations on relay plate:

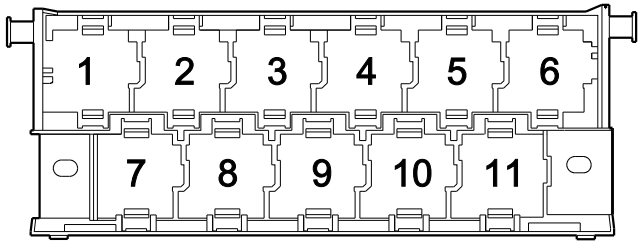

97-22850

1 - Radiator fan run-on control unit
2 - Glow plug relay (103)
7 - Terminal 30 voltage supply relay
11 - Fuel shut- off control unit

Note:

- *The number in brackets behind the part designation denotes the control number on the housing.*

Fuse colours

30 A - green
25 A - white
20 A - yellow

Protected by copyright. Copying for private or commercial purposes, in part or in whole, is not permitted unless authorised by Volkswagen AG. Volkswagen AG does not guarantee or accept any liability with respect to the correctness of information in this document. Copyright by Volkswagen AG.
satelettronica

15 A - blue
10 A - red
7.5 A - brown
5 A - beige
3 A - purple

Protected by copyright. Copying for private or commercial purposes, in part or in whole, is not permitted unless authorised by Volkswagen AG. Volkswagen AG does not guarantee or accept any liability with respect to the correctness of information in this document. Copyright by Volkswagen AG.

satelettronica

authorised by Volkswagen AG. Volkswagen AG does not guarantee the correctness of information in this document. Copyright by Volkswagen AG. Copying for commercial purposes, in part or in whole, is not permitted.

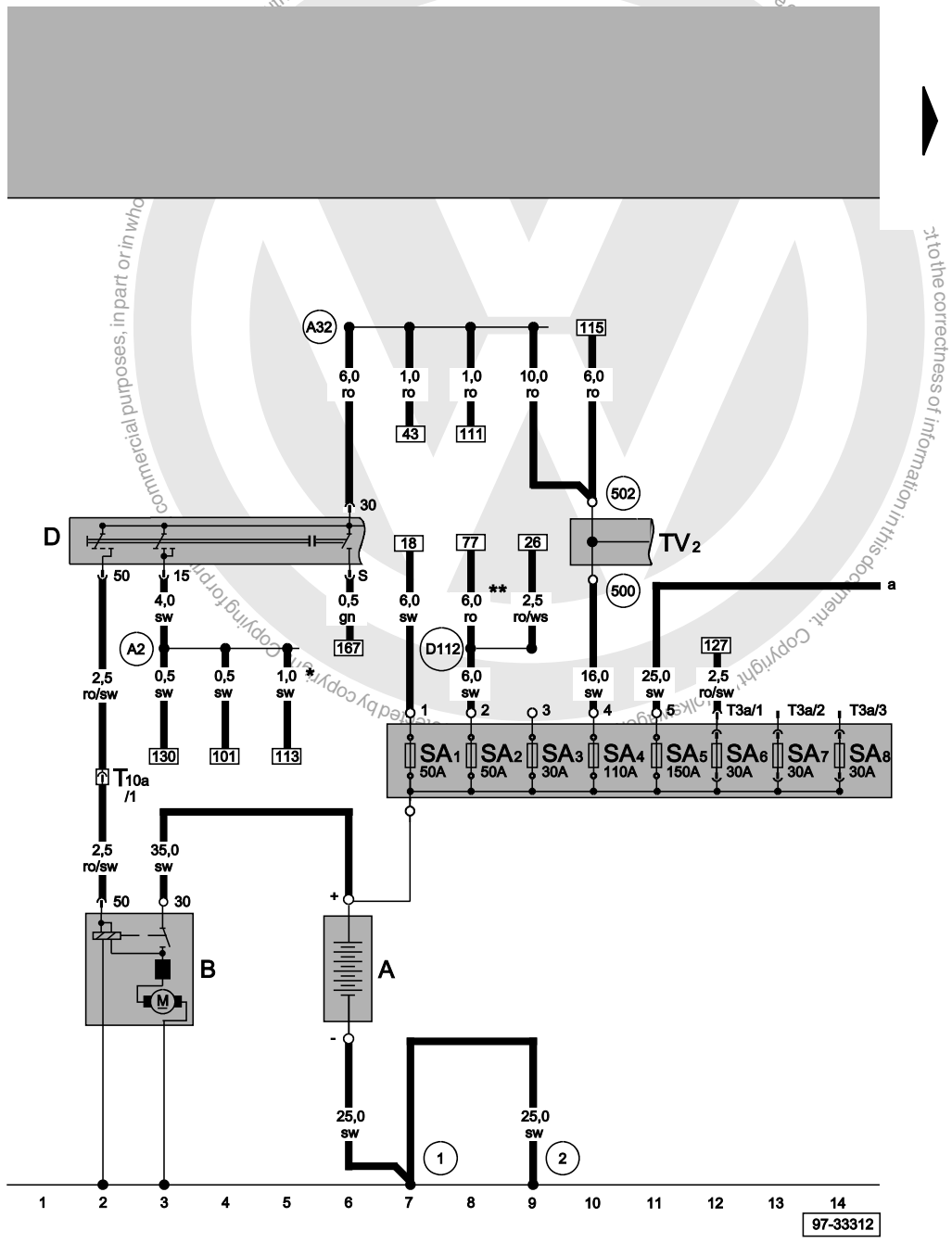

Starter, battery, ignition/starter switch, fuse box / battery

A	Battery
B	Starter
D	Ignition/starter switch
SA1	Fuse -1- on battery fuse box
SA2	Fuse -2- on battery fuse box
SA3	Fuse -3- on battery fuse box
SA4	Fuse -4- on battery fuse box
SA5	Fuse -5- on battery fuse box
SA6	Fuse -6- on battery fuse box
SA7	Fuse -7- on battery fuse box
SA8	Fuse -8- on battery fuse box
T3a	3-pin connector, on battery fuse box
T10a	10-pin connector, black, coupling station under relay carrier, left
TV2	Terminal 30 wiring junction
1	Earth strap, battery - body
2	Earth strap, gearbox - body
500	Screw connection -1- (30), on relay plate
502	Screw connection -1- (30a), on relay plate
A2	Positive (+) connection (15), in dash panel wiring harness
A32	Positive (+) connection (30), in dash panel wiring harness
D112	Connection -10-, in engine compartment wiring harness
*	Only models with airbags
**	Only models with heater for radiator

ws	=	white
sw	=	black
ro	=	red
br	=	brown
gn	=	green
bl	=	blue
gr	=	grey
li	=	purple
ge	=	yellow
or	=	orange
rs	=	pink

satelettronica

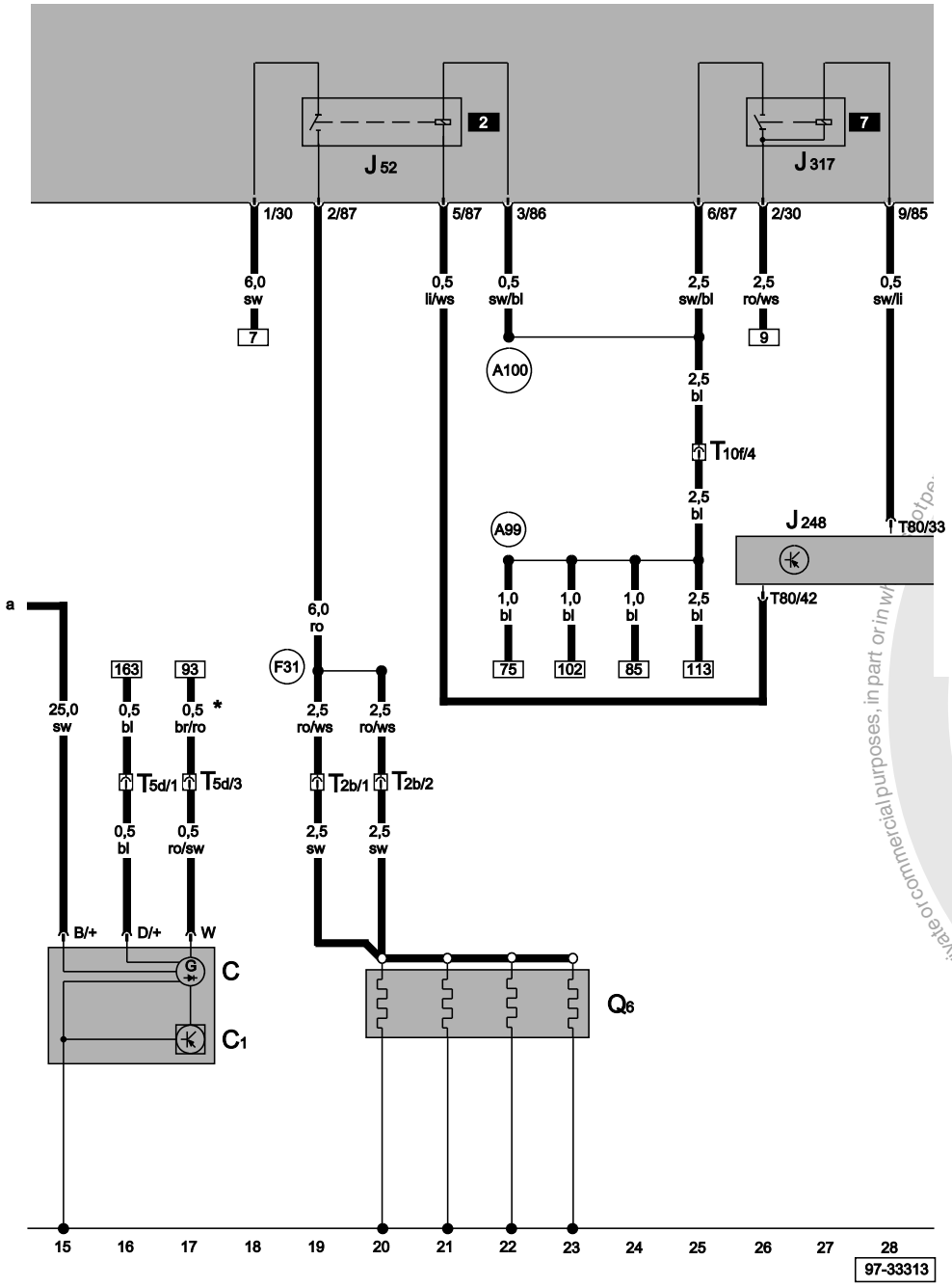

Diesel direct injection system control unit, alternator, voltage regulator, glow plugs (engine), relay for glow plugs, voltage supply relay

C	Alternator
C1	Voltage regulator
J52	Glow plug relay
J248	Diesel direct injection system control unit
J317	Terminal 30 voltage supply relay
Q6	Glow plugs - (engine)
T2b	2-pin connector, in engine compartment
T5d	5-pin connector, in engine compartment, near gearbox
T10f	10-pin connector, purple, coupling station under relay carrier, left
T80	80-pin connector
A99	Connection -1- (87), in dash panel wiring harness
A100	Connection -2- (87), in dash panel wiring harness
F31	Connection (glow plugs - engine) in diesel direct injection system wiring harness
*	Only models with heater for radiator

ws	=	white
sw	=	black
ro	=	red
br	=	brown
gn	=	green
bl	=	blue
gr	=	grey
li	=	purple
ge	=	yellow
or	=	orange
rs	=	pink

Protected by copyright. Copying for private or commercial purposes, in part or in whole, is not permitted unless authorised by Volkswagen AG. Volkswagen AG does not guarantee or accept any liability with respect to the correctness of information in this document. Copyright by Volkswagen AG.
satelettronica

Diesel direct injection system control unit, accelerator pedal position sender, intake manifold pressure sender, intake air temperature sender, kick-down switch, idling switch

F8	Kick-down switch
F60	Idling switch
G42	Intake air temperature sender
G71	Intake manifold pressure sender
G79	Accelerator pedal position sender
J248	Diesel direct injection system control unit
T6e	6-pin connector, near accelerator pedal position sender
T80	80-pin connector
167	Earth connection -4-, in engine compartment wiring harness

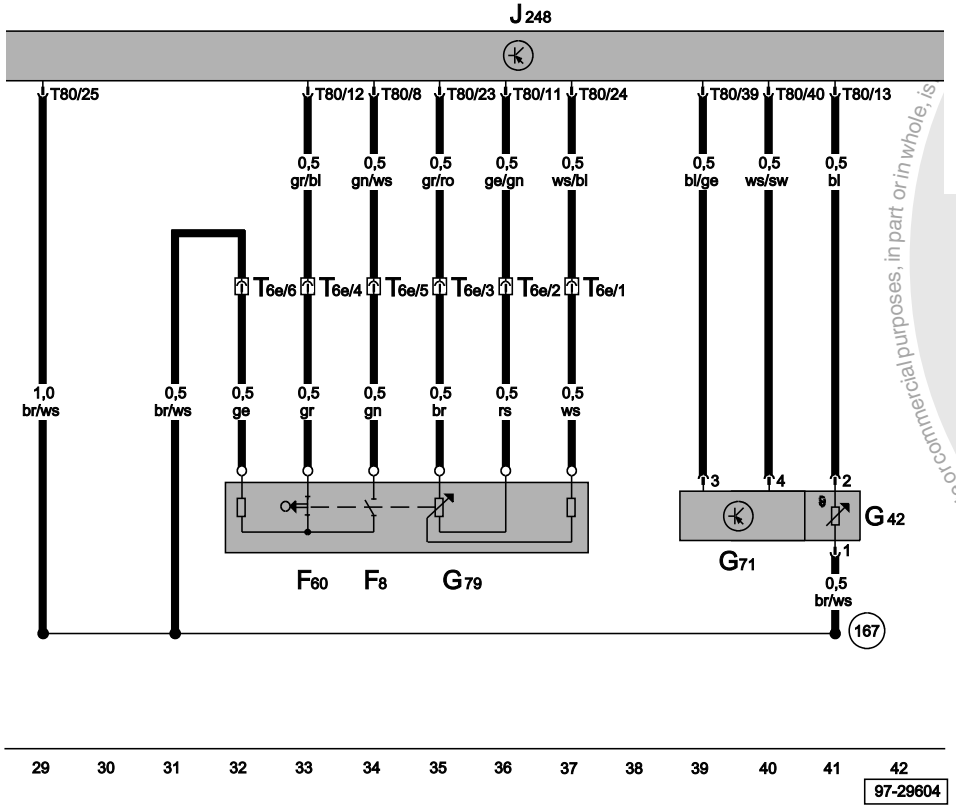

ws	=	white
sw	=	black
ro	=	red
br	=	brown
gn	=	green
bl	=	blue
gr	=	grey
li	=	purple
ge	=	yellow
or	=	orange
rs	=	pink

Protected by copyright. Copying for private or commercial purposes, in part or in whole, is unless authorised by Volkswagen AG. Volkswagen AG does not guarantee or accept any liability with respect to the correctness of information in this document. Copyright by Volkswagen AG.
satelettronica

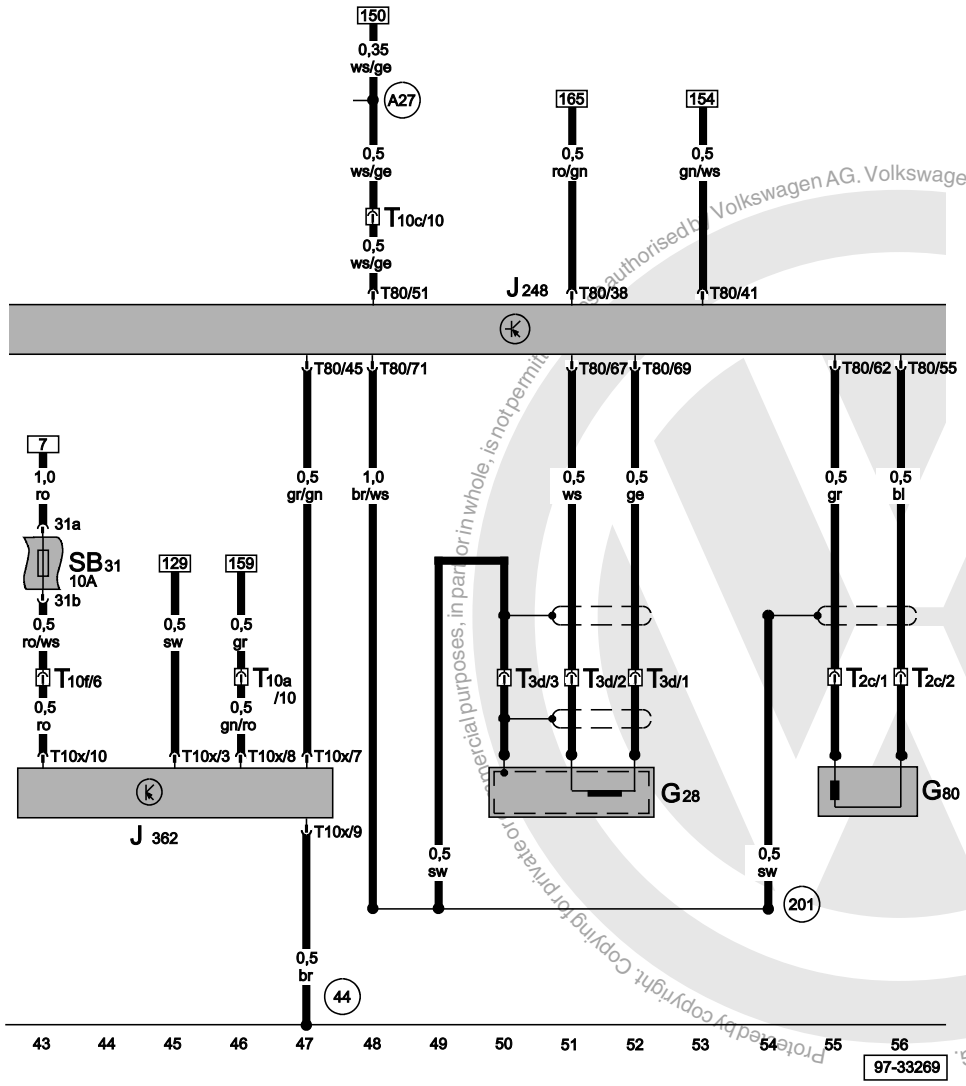

Diesel direct injection system control unit, engine speed sender, needle lift sender, immobilizer control unit

G28	Engine speed sender
G80	Needle lift sender
J248	Diesel direct injection system control unit
J362	Immobilizer control unit
SB31	Fuse -31- on fuse box
T2c	2-pin connector, near needle lift sender
T3d	3-pin connector, near engine speed sender
T10a	10-pin connector, black, coupling station under relay carrier, left
T10c	10-pin connector, brown, coupling station under relay carrier, left
T10f	10-pin connector, purple, coupling station under relay carrier, left
T10x	10-pin connector, on immobilizer control unit
T80	80-pin connector
44	Earth point, lower part of left A-pillar
201	Earth connection -5-, in engine compartment wiring harness
A27	Connection (speed signal), in dash panel wiring harness

ws	=	white
sw	=	black
ro	=	red
br	=	brown
gn	=	green
bl	=	blue
gr	=	grey
li	=	purple
ge	=	yellow
or	=	orange
rs	=	pink

Protected by copyright. Copying for private or commercial purposes, in part or in whole, is not permitted unless authorised by Volkswagen AG. Volkswagen AG does not guarantee or accept any liability with respect to the correctness of information in this document. Copyright by Volkswagen AG.

satelettronica

Diesel direct injection system control unit, metering adjuster, exhaust gas recirculation valve, intake manifold flap change-over valve, fuel temperature sender, modulating piston movement sender

G81	Fuel temperature sender
G149	Modulating piston movement sender
J248	Diesel direct injection system control unit
N18	Exhaust gas recirculation valve
N146	Metering adjuster
N239	Intake manifold flap change-over valve
T10y	10-pin connector, blue, on part of left A-pillar
T80	80-pin connector
E30	Connection (87a), in engine wiring harness
F25	Connection -1-, in diesel direct injection system wiring harness

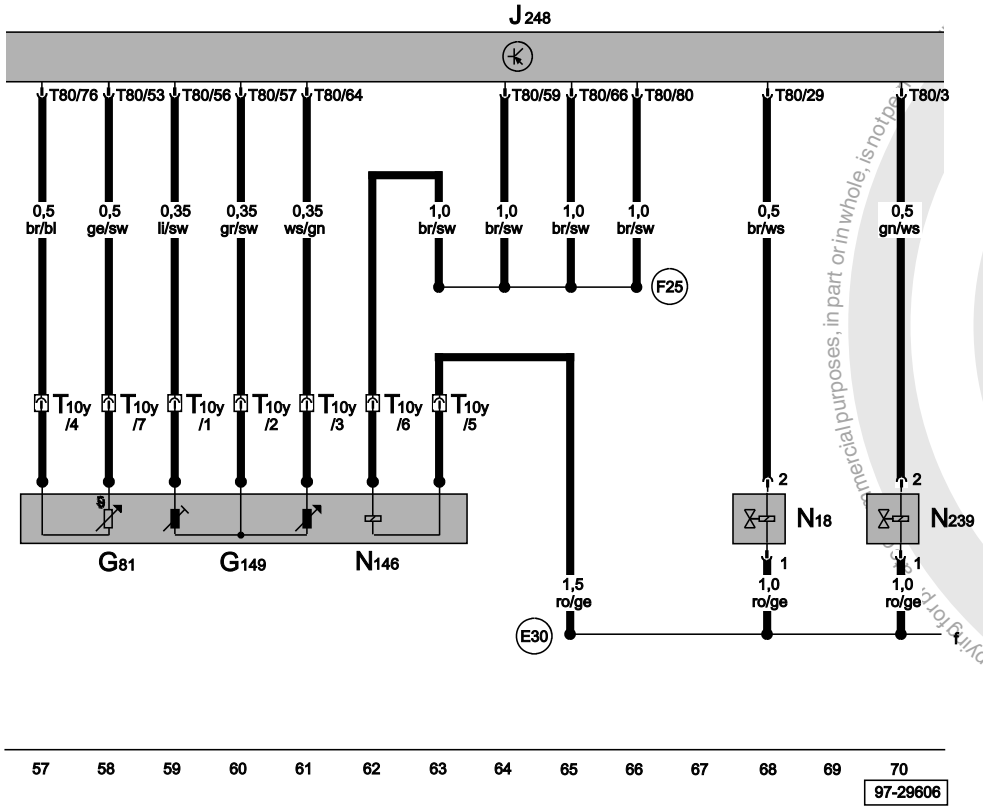

ws	=	white
sw	=	black
ro	=	red
br	=	brown
gn	=	green
bl	=	blue
gr	=	grey
li	=	purple
ge	=	yellow
or	=	orange
rs	=	pink

satelettronica

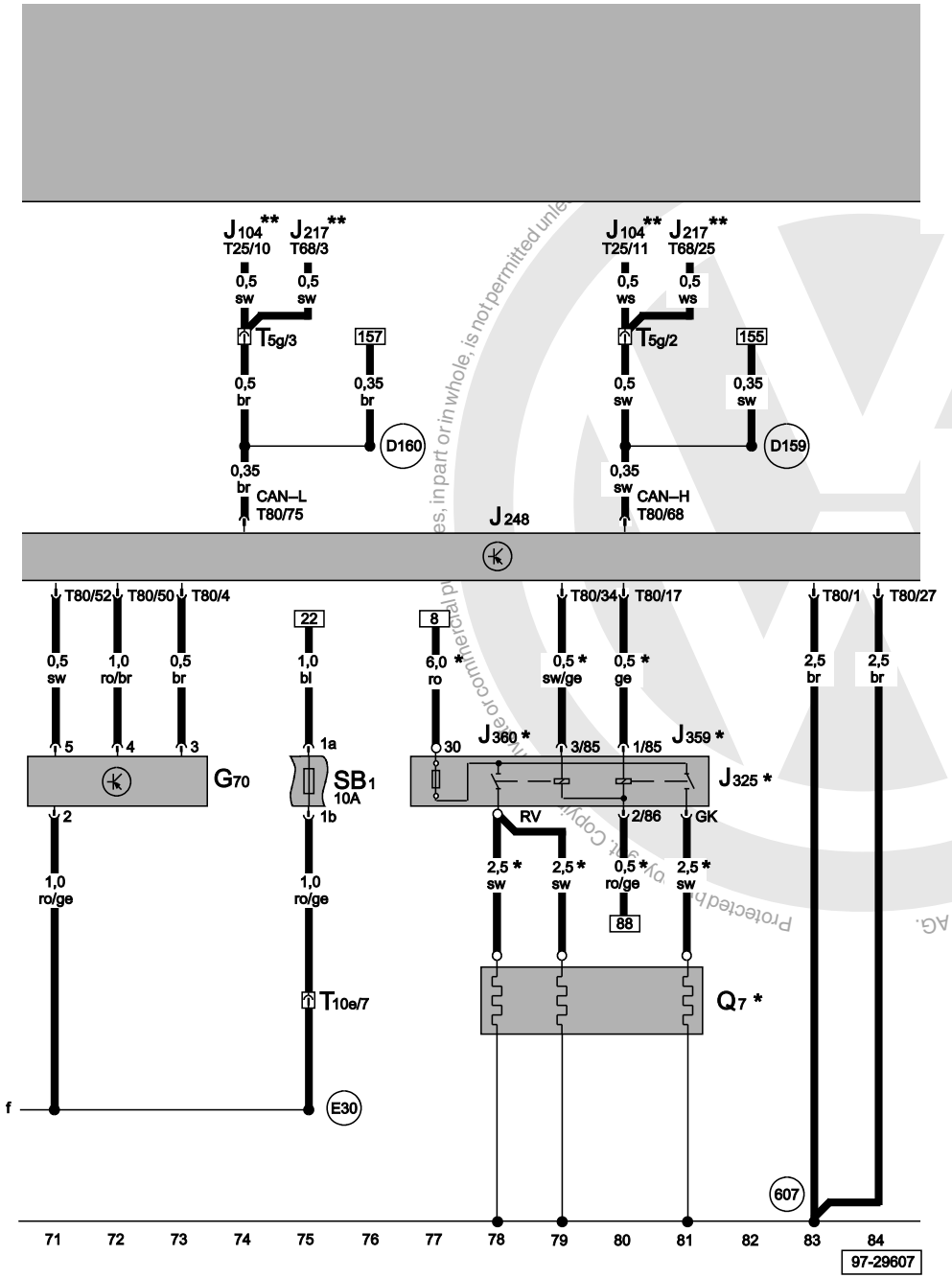

Diesel direct injection system control unit, air mass metercoolant, heater element relay, coolant heating elements

G70	Air mass meter
J104	ABS with EDL control unit
J217	Automatic gearbox control unit
J248	Diesel direct injection system control unit
J325	Relay for coolant heater elements, in engine
J359	Low heat output relay
J360	High heat output relay
Q7	Coolant heating elements
SB1	Fuse -1- on fuse box
T5g	5-pin connector, pink, coupling station under relay carrier, left
T10e	10-pin connector, green, coupling station under relay carrier, left
T25	25-pin connector
T68	68-pin connector
T80	80-pin connector
607	Earth point, on left in plenum chamber
E30	Connection (87a), in engine wiring harness
D159	Positive (+) connection (high bus), in interior wiring harness
D160	Positive (+) connection (low bus), in engine compartment wiring harness
*	Only models with heater for radiator
**	Depends on equipment

ws	=	white
sw	=	black
ro	=	red
br	=	brown
gn	=	green
bl	=	blue
gr	=	grey
li	=	purple
ge	=	yellow
or	=	orange
rs	=	pink

Protected by copyright. Copyright by Volkswagen AG. does not guarantee or accept any liability with respect to the correctness of information in this document. Copyright by Volkswagen AG. Reproduction, in part or in whole, is not permitted unless authorized. Use for commercial purposes is prohibited.
satelettronica

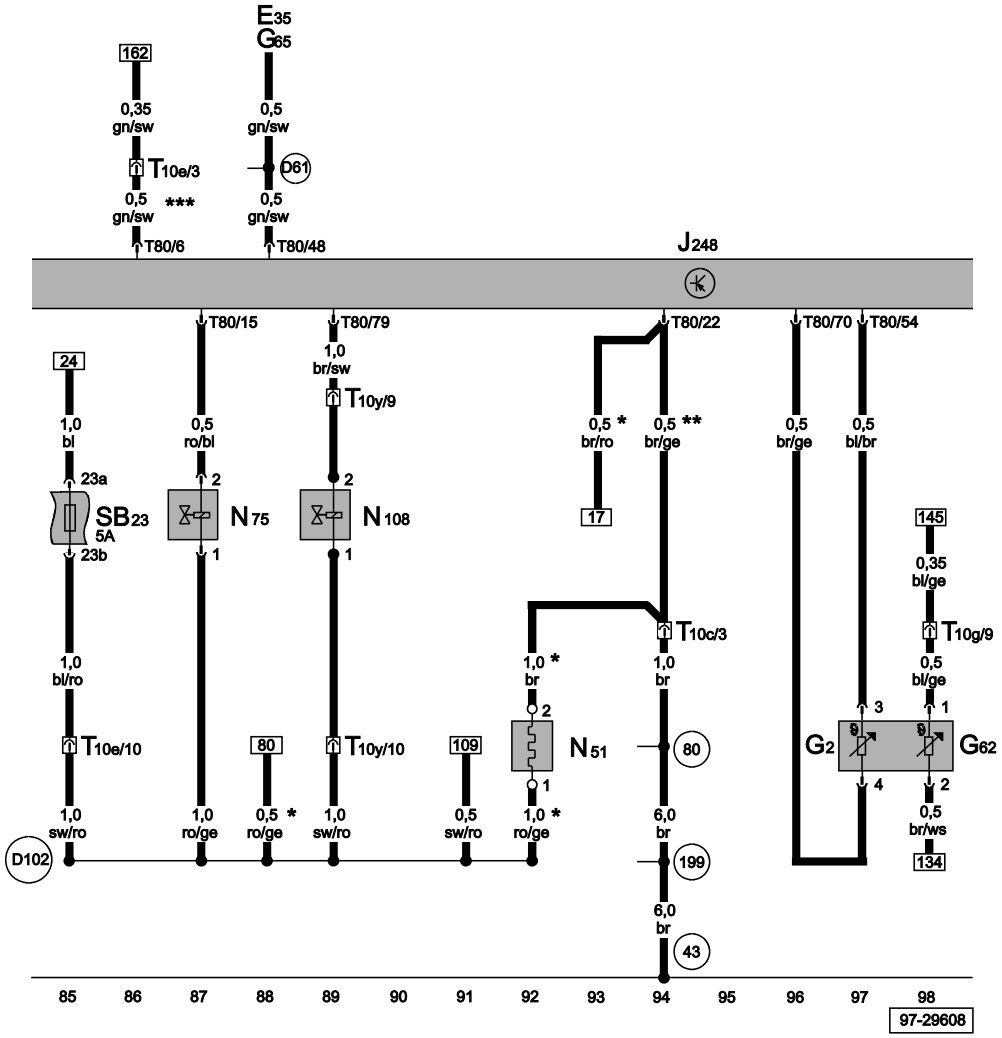

Diesel direct injection system control unit, coolant temperature sender, intake manifold preheating heater element, charge pressure control solenoid valve, commencement of injection valve

E35	Air conditioner switch
G2	Coolant temperature sender
G62	Coolant temperature sender
G65	High pressure sender
J248	Diesel direct injection system control unit
N51	Intake manifold preheating heater element
N75	Charge pressure control solenoid valve
N108	Commencement of injection valve
SB23	Fuse -23- on fuse box
T10c	10-pin connector, brown, coupling station under relay carrier, left
T10e	10-pin connector, green, coupling station under relay carrier, left
T10g	10-pin connector, red, coupling station under relay carrier, left
T10y	10-pin connector, blue, on part of left A-pillar
T80	80-pin connector
43	Earth point, lower part of right A-pillar
80	Earth connection -1-, in instruments wiring harness
199	Earth connection -3-, in dash panel wiring harness
D61	Connection (air conditioner), in engine compartment wiring harness
D102	Connection -2-, in engine compartment wiring harness
*	Only models with heater for radiator
**	Only models without heater for radiator
***	Engine speed signal from engine control unit

ws	=	white
sw	=	black
ro	=	red
br	=	brown
gn	=	green
bl	=	blue
gr	=	grey
li	=	purple
ge	=	yellow
or	=	orange
rs	=	pink

Protected by copyright. Copying for private or commercial purposes, in part or in whole, is not permitted unless authorised by Volkswagen AG. Volkswagen AG does not guarantee or accept any liability with respect to the correctness of information in this document.
satelettronica

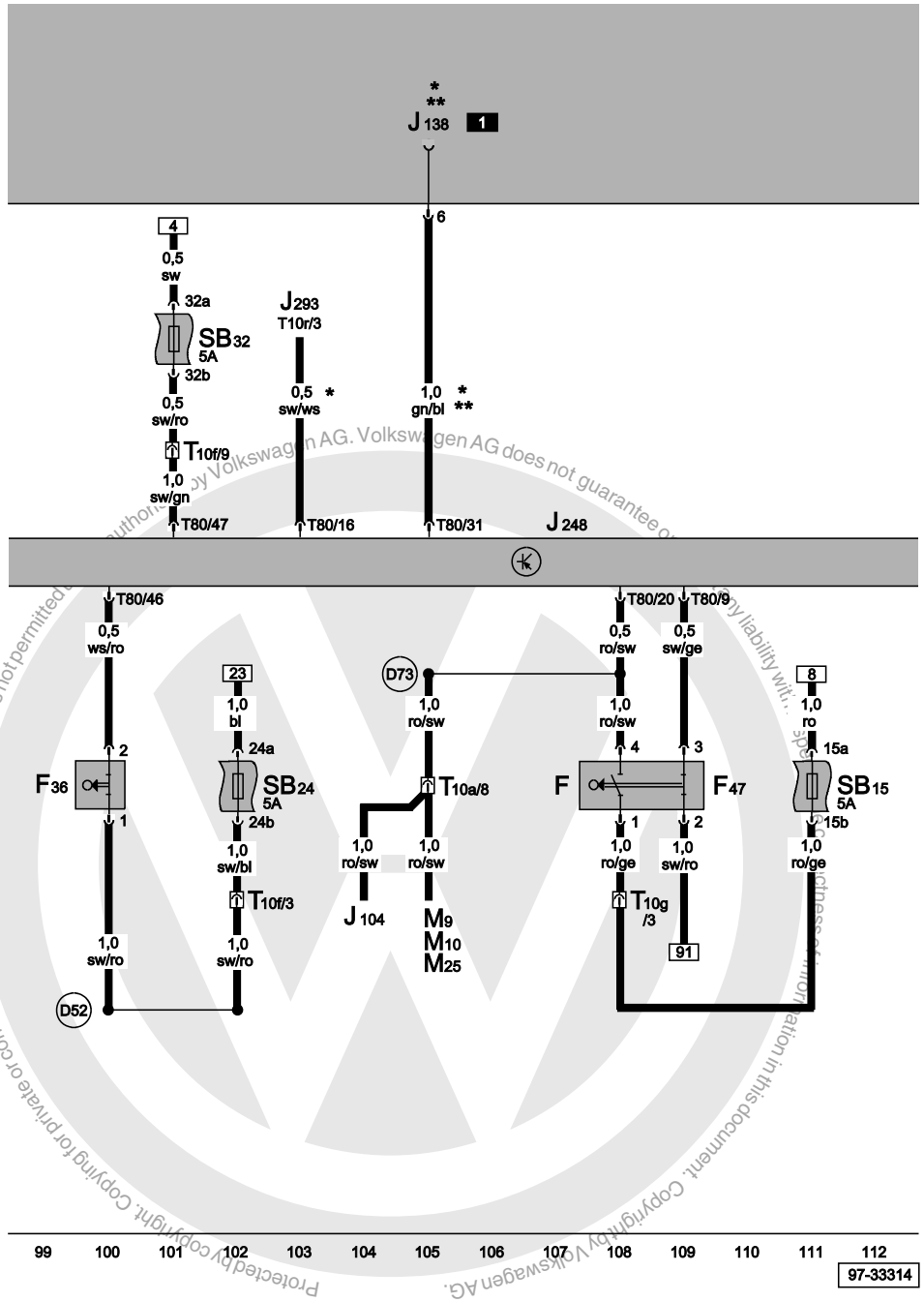

Diesel direct injection system control unit, brake light switch, clutch pedal switch, cruise control system brake pedal switch/diesel direct inj. system

F	Brake light switch
F36	Clutch pedal switch
F47	Cruise control system brake pedal switch (diesel direct injection system)
J104	ABS with EDL control unit
J138	Radiator fan run-on control unit
J248	Diesel direct injection system control unit
J293	Radiator fan control unit
M9	Brake light bulb, left
M10	Brake light bulb, right
M25	High level brake light bulb
SB15	Fuse -15- on fuse box
SB24	Fuse -24- on fuse box
SB32	Fuse -32- on fuse box
T10a	10-pin connector, black, coupling station under relay carrier, left
T10f	10-pin connector, purple, coupling station under relay carrier, left
T10g	10-pin connector, red, coupling station under relay carrier, left
T80	80-pin connector
D52	Positive (+) connection (15a), in engine compartment wiring harness
D73	Positive (+) connection (54), in engine compartment wiring harness
*	Only models with air conditioner
**	Only for engine codes ASK, ASV

ws	=	white
sw	=	black
ro	=	red
br	=	brown
gn	=	green
bl	=	blue
gr	=	grey
li	=	purple
ge	=	yellow
or	=	orange
rs	=	pink

satelettronica

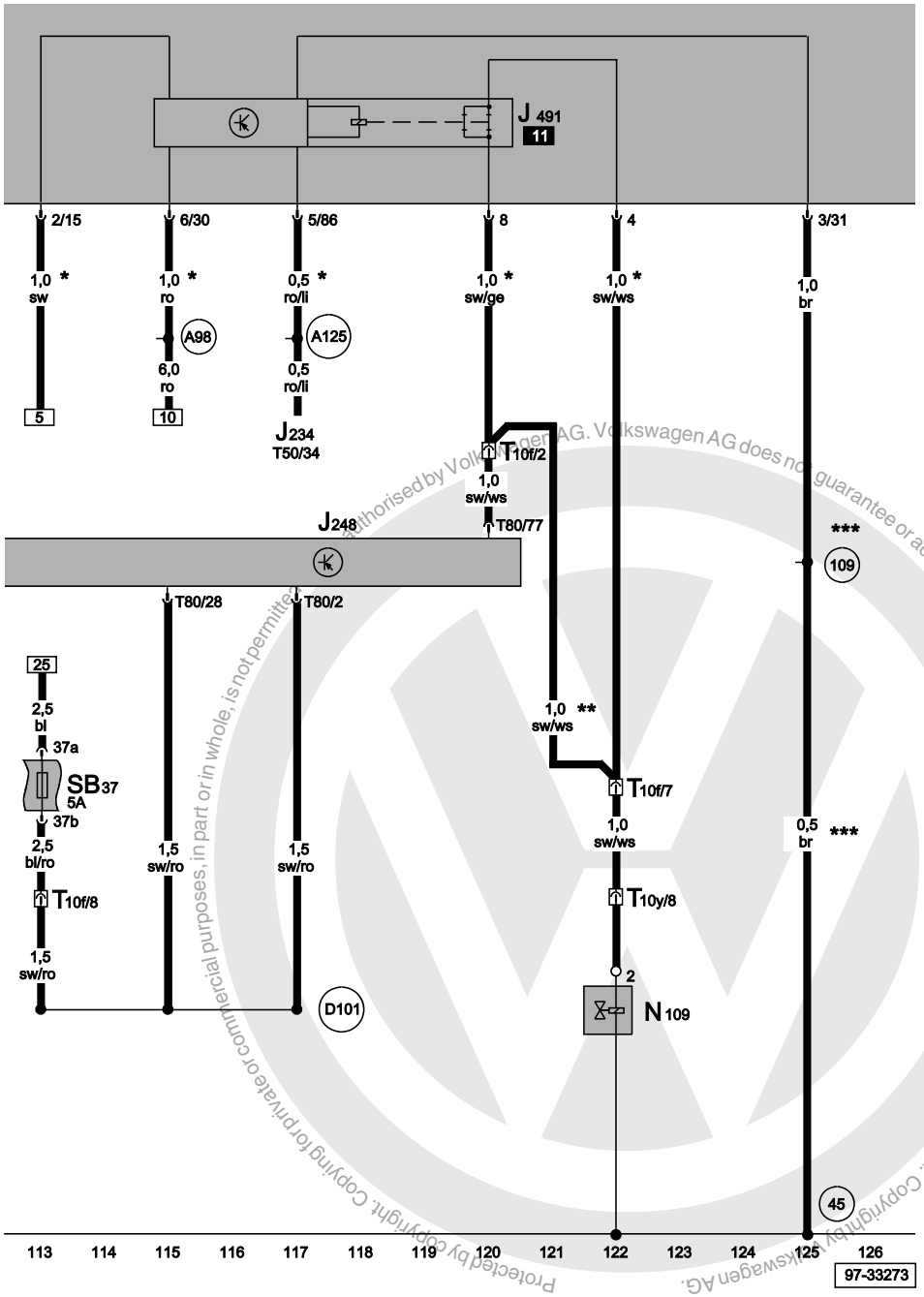

Diesel direct injection system control unit, fuel shut-off control unit (Crash), fuel shut-off valve

J234	Airbag control unit
J248	Diesel direct injection system control unit
J491	Fuel shut-off control unit (crash)
N109	Fuel shut-off valve
SB37	Fuse -37- on fuse box
T10f	10-pin connector, purple, coupling station under relay carrier, left
T10y	10-pin connector, blue, on part of left A-pillar
T50	50-pin connector
T80	80-pin connector
45	Earth point, behind dash panel - centre
109	Earth connection, in airbag wiring harness
A98	Positive (+) connection -4- (30), in dash panel wiring harness
A125	Connection (crash signal), in dash panel wiring harness
D101	Connection -1-, in engine compartment wiring harness
*	Only models with airbags
**	Only models without airbags
***	Does not models with driver airbag

ws	=	white
sw	=	black
ro	=	red
br	=	brown
gn	=	green
bl	=	blue
gr	=	grey
li	=	purple
ge	=	yellow
or	=	orange
rs	=	pink

Protected by copyright. Copying for private or commercial purposes, in part or in whole, is not permitted unless authorised by Volkswagen AG. Volkswagen AG does not guarantee or accept any liability with respect to the correctness of information in this document. Copyright by Volkswagen AG.

satelettronica

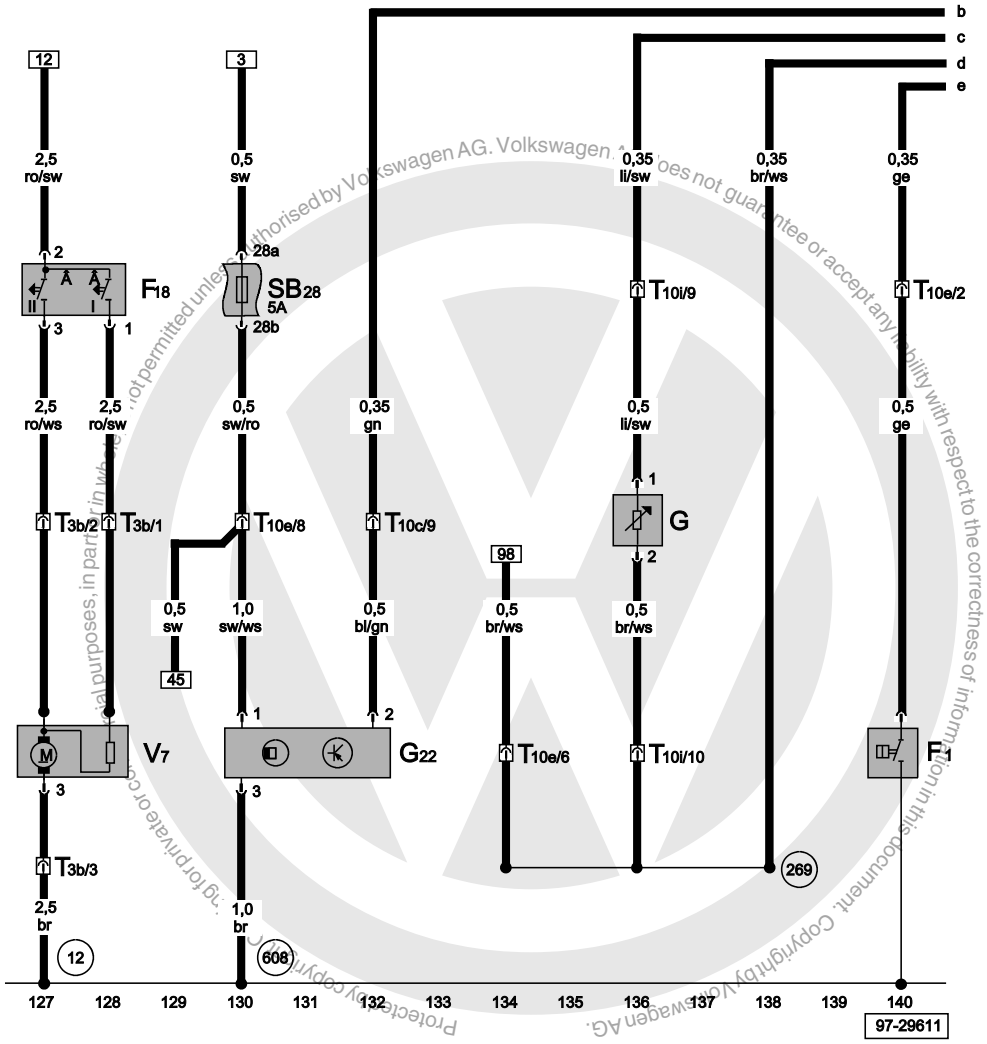

Oil pressure switch, fuel gauge sender, speedometer sender, radiator fan, radiator fan thermo-switch

G	Fuel gauge sender
G22	Speedometer sender (Hall sender, on gearbox)
F1	Oil pressure switch
F18	Radiator fan thermo-switch
SB28	Fuse -28- on fuse box
T3b	3-pin connector, on radiator fan
T10c	10-pin connector, brown, coupling station under relay carrier, left
T10e	10-pin connector, green, coupling station under relay carrier, left
T10i	10-pin connector, orange, coupling station under relay carrier, left
V7	Radiator fan
12	Earth point, left in engine compartment
269	Earth connection (sender earth) -1-, in dash panel wiring harness
608	Earth point, in centre of plenum chamber

ws	=	white
sw	=	black
ro	=	red
br	=	brown
gn	=	green
bl	=	blue
gr	=	grey
li	=	purple
ge	=	yellow
or	=	orange
rs	=	pink

Protected by copyright. Copyright by Volkswagen AG. Volkswagen AG does not guarantee or accept any liability with respect to the correctness of information in this document. Copying for private or commercial purposes, in part or in whole, is not permitted unless authorised by Volkswagen AG.

satelettronica

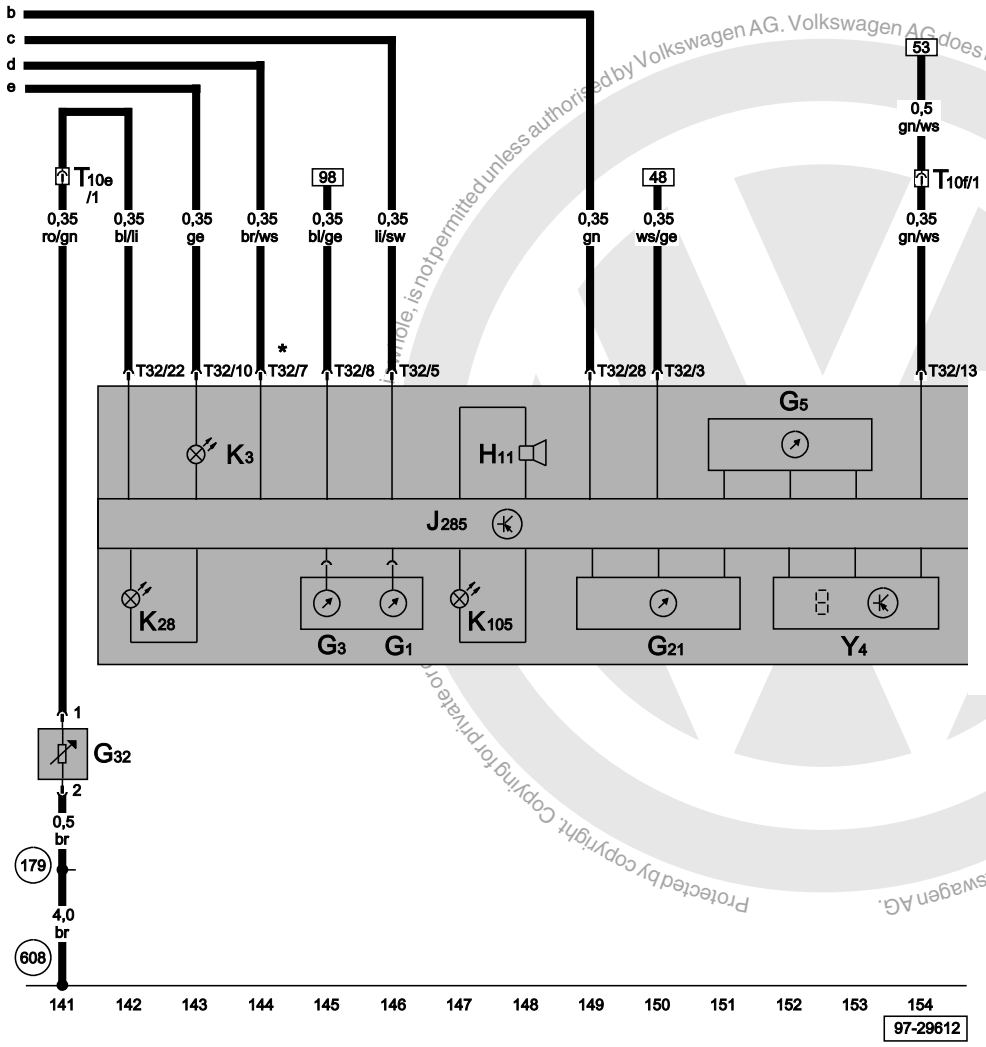

Control unit with display in dash panel insert, coolant shortage indicator sender, oil pressure warning lamp

G1	Fuel gauge
G3	Coolant temperature gauge
G5	Rev. counter
G21	Speedometer
G32	Coolant shortage indicator sender
H11	Oil pressure warning buzzer
J285	Control unit with display in dash panel insert
K3	Oil pressure warning lamp
K28	Coolant temperature/coolant shortage warning lamp
K105	Reserve fuel warning lamp
T10e	10-pin connector, green, coupling station under relay carrier, left
T10f	10-pin connector, purple, coupling station under relay carrier, left
T32	32-pin connector, blue, on dash panel insert
Y4	Odometer display
179	Earth connection, in left headlight wiring harness
608	Earth point, in centre of plenum chamber
*	Output for signal earth

ws	=	white
sw	=	black
ro	=	red
br	=	brown
gn	=	green
bl	=	blue
gr	=	grey
li	=	purple
ge	=	yellow
or	=	orange
rs	=	pink

Protected by copyright. Copying for private or commercial purposes, in whole, is not permitted unless authorised by Volkswagen AG. Volkswagen AG does not guarantee or accept any liability with respect to the correctness of information in this document. Copyright by Volkswagen AG.

satelettronica

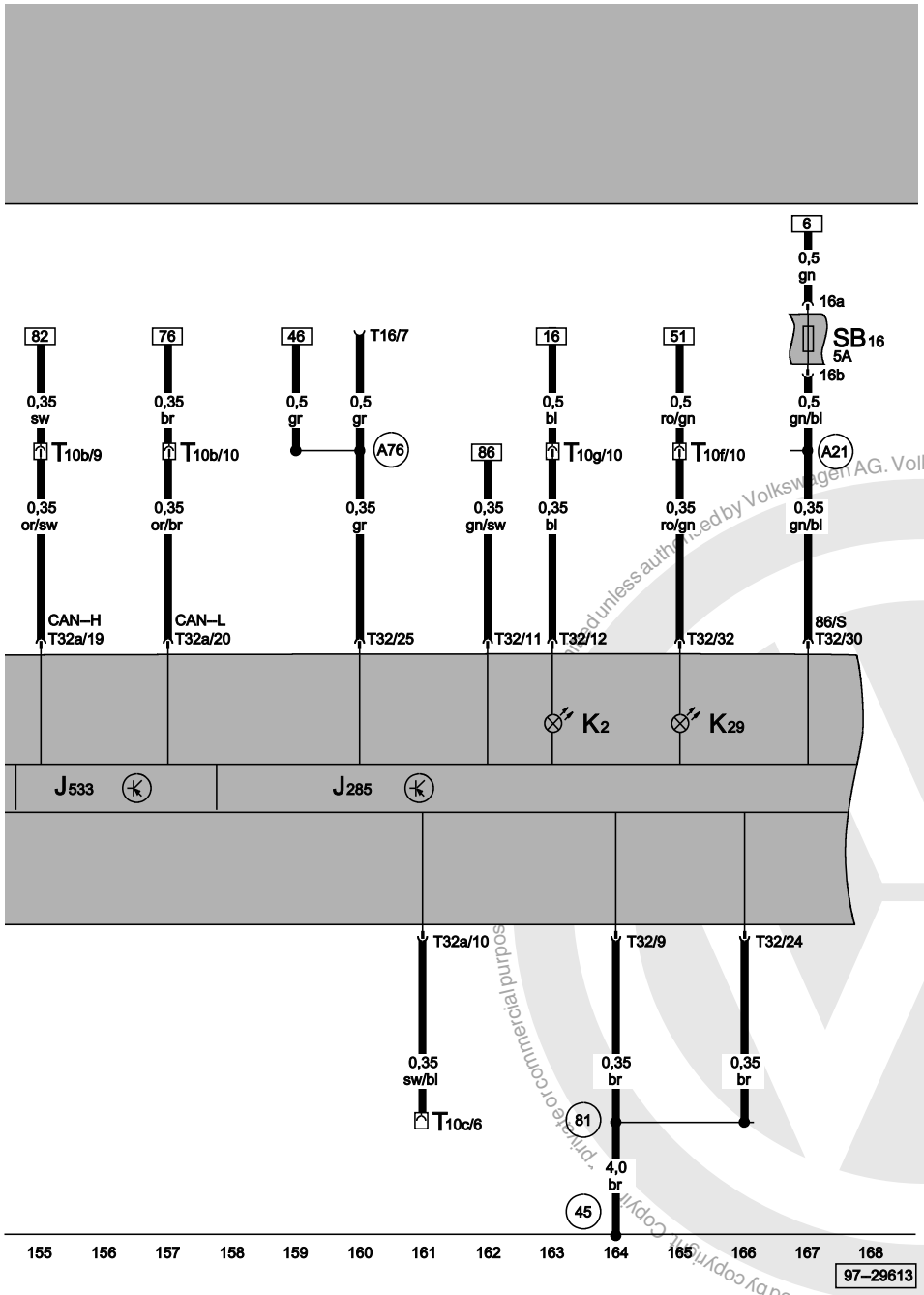

Control unit with display in dash panel insert, diagnostic connector, alternator warning lamp, glow period warning lamp

J285	Control unit with display in dash panel insert
J533	Data bus diagnostic interface
K2	Alternator warning lamp
K29	Glow period warning lamp
SB16	Fuse -16- on fuse box
T10b	10-pin connector, white, coupling station under relay carrier, left
T10c	10-pin connector, brown, coupling station under relay carrier, left
T10f	10-pin connector, purple, coupling station under relay carrier, left
T10g	10-pin connector, red, coupling station under relay carrier, left
T16	16-pin connector, diagnostic connector
T32	32-pin connector, blue, on dash panel insert
T32a	32-pin connector, green, on dash panel insert
45	Earth point, behind dash panel - centre
81	Earth connection -1-, in dash panel wiring harness
A21	Connection (86s), in dash panel wiring harness
A76	Connection (diagnosis wire K), in dash panel wiring harness

ws	=	white
sw	=	black
ro	=	red
br	=	brown
gn	=	green
bl	=	blue
gr	=	grey
li = purple
ge = yellow
or = orange
rs = pink

Protected by copyright. Copyright by Volkswagen AG. Volkswagen AG does not guarantee unless authorised by Volkswagen AG. Volkswagen AG does not guarantee or accept any liability with respect to the correctness of information in this document. Copyright by Volkswagen AG. Protected by copyright. Copying for private or commercial purposes, in part or in whole, is not permitted unless authorised by Volkswagen AG.

satelettronica

1.6 l Simos/74 kW, engine codes AUR

From May 2001

For alternatives to relay and fuse positions as well as multi-pin connector wiring - see "Fitting locations" section.

Relay locations on relay plate:

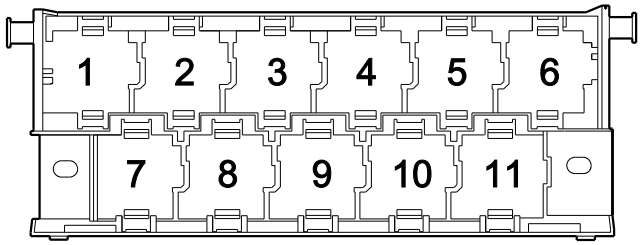

97-22850

2 - Fuel pump relay (167)
5 - Secondary air pump relay (100)
7 - Current supply relay for Simos control unit (30)
11 - Fuel shut- off control unit (405)

Note:

- *The number in brackets behind the part designation denotes the control number on the housing.*

Fuse colours

30 A - green
25 A - white
20 A - yellow
15 A - blue
10 A - red
7.5 A - brown
5 A - beige
3 A - purple

Protected by copyright. Copying for private or commercial purposes, in part or in whole, is not permitted unless authorised by Volkswagen AG. Volkswagen AG does not guarantee or accept any liability with respect to the correctness of information in this document. Copyright by Volkswagen AG.

satelettronica

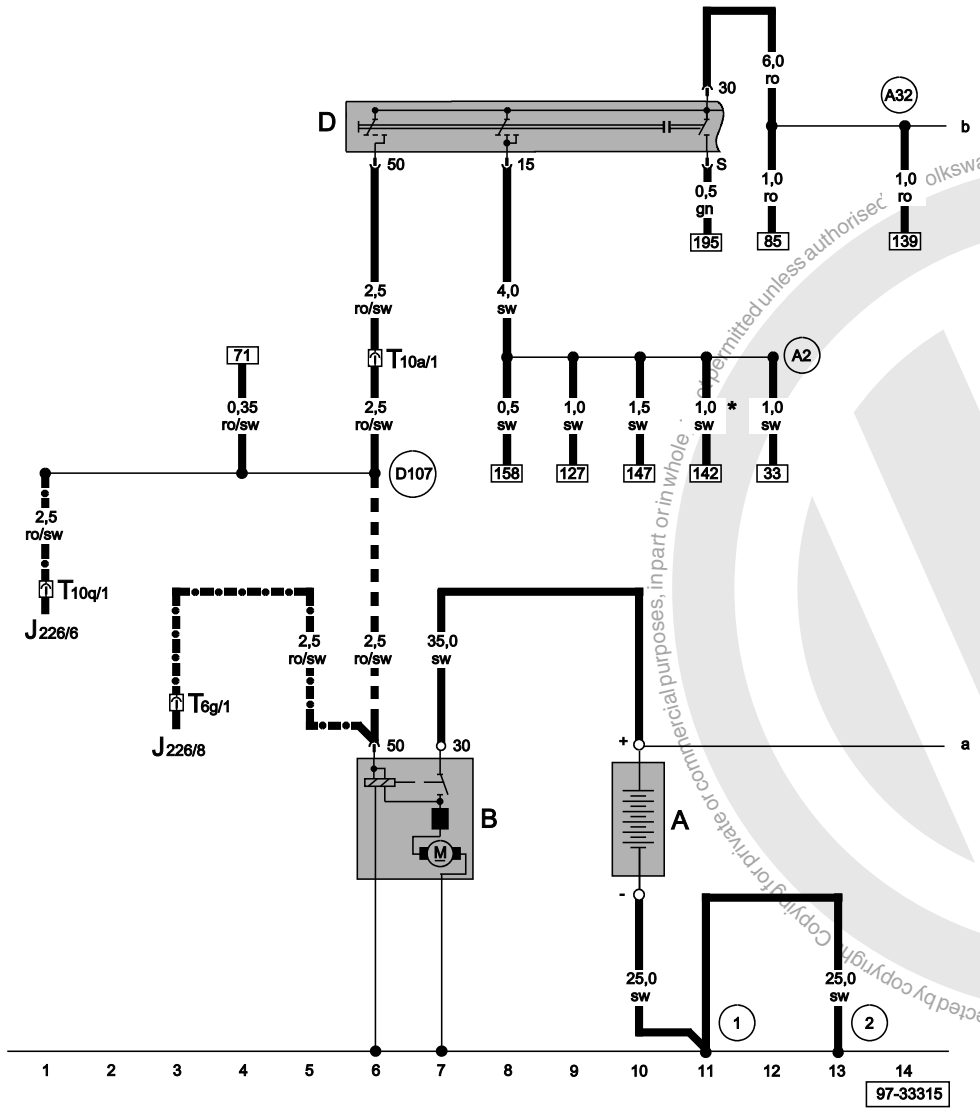

Starter, battery, ignition/starter switch

A	Battery
B	Starter
D	Ignition/starter switch
J226	Starter inhibitor and reversing light relay
T6g	6-pin connector, coupling station under relay carrier, left
T10a	10-pin connector, black, coupling station under relay carrier, left
T10q	10-pin connector, coupling station under relay carrier, left
1	Earth strap, battery - body
2	Earth strap, gearbox - body
A2	Positive (+) connection (15), in dash panel wiring harness
A32	Positive (+) connection (30), in dash panel wiring harness
D107	Connection -5-, in engine compartment wiring harness
*	Only models with airbags
<fo:external-graphic src="/../PDOC/samba/tools/png-convert/out//slp/ft_icons/m_m_m.png" content-width="20pt" scaling="uniform"/>	Only models with manual gearbox
<fo:external-graphic src="/../PDOC/samba/tools/png-convert/out//slp/	Only models with automatic gearbox

ws = white

Protected by copyright. Copying for private or commercial purposes, in part or in whole, is not permitted unless authorised. Volkswagen AG. Volkswagen AG does not guarantee or accept any liability with respect to the correctness of information in this document. Copyright by Volkswagen AG.

satelettronica

sw	=	black	ft_icons/
ro	=	red	m_k_m.p
br	=	brown	ng"
gn	=	green	content-
bl	=	blue	width="2
gr	=	grey	0pt"
li	=	purple	scaling="
ge	=	yellow	uniform"/
or	=	orange	>
rs	=	pink	

Protected by copyright. Copying for private or commercial purposes, in part or in whole, is not permitted unless authorised by Volkswagen AG. Volkswagen AG does not guarantee or accept any liability with respect to the correctness of information in this document. Copyright by Volkswagen AG.

satelettronica

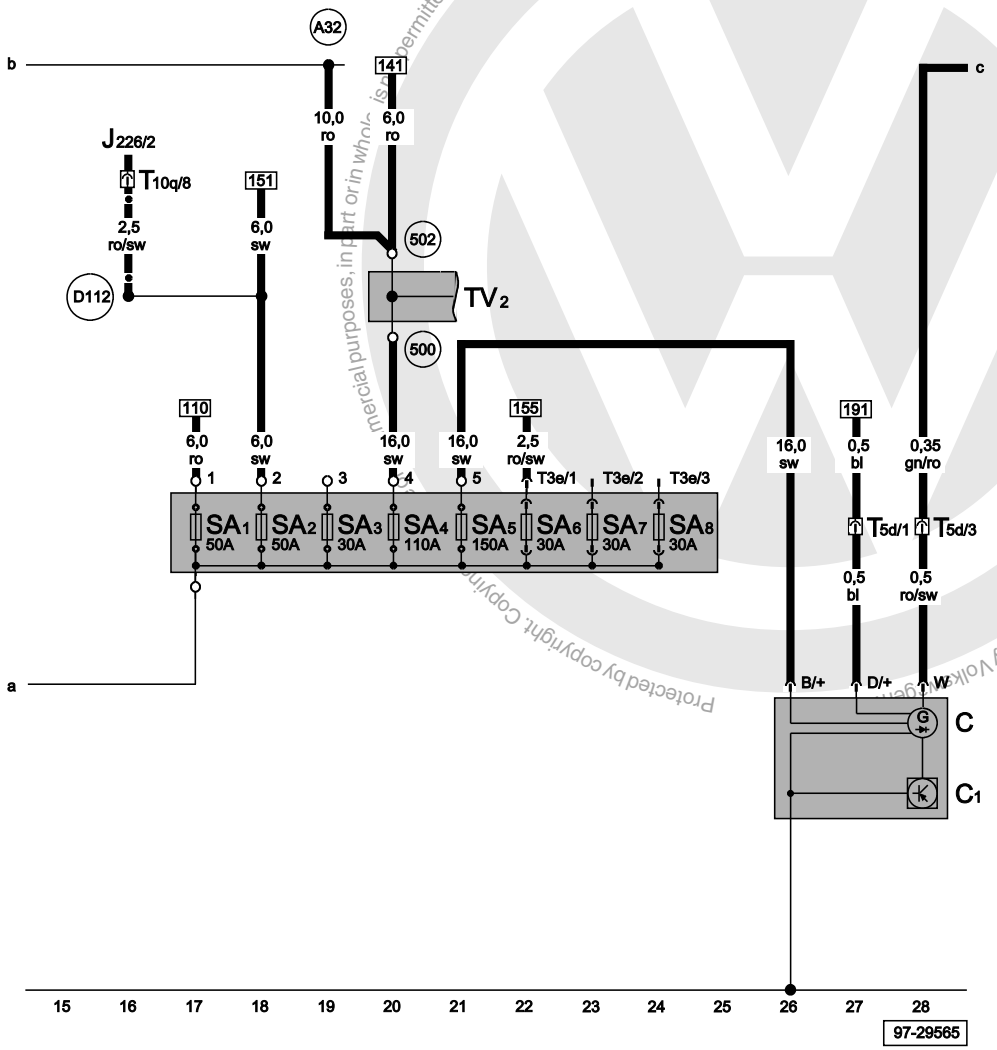

ws	=	white
sw	=	black
ro	=	red
br	=	brown
gn	=	green
bl	=	blue
gr	=	grey
li	=	purple
ge	=	yellow
or	=	orange
rs	=	pink

Alternator, ignition/starter switch, fuse box/battery

C	Alternator
C1	Voltage regulator
J226	Starter inhibitor and reversing light relay
SA1	Fuse -1- on battery fuse box
SA2	Fuse -2- on battery fuse box
SA3	Fuse -3- on battery fuse box
SA4	Fuse -4- on battery fuse box
SA5	Fuse -5- on battery fuse box
SA6	Fuse -6- on battery fuse box
SA7	Fuse -7- on battery fuse box
SA8	Fuse -8- on battery fuse box
T3e	3-pin connector, on battery fuse box
T5d	5-pin connector, in engine compartment, near gearbox
T10q	10-pin connector, coupling station under relay carrier, left
TV2	Terminal 30 wiring junction
500	Screw connection -1- (30), on relay plate
502	Screw connection -1- (30a), on relay plate
A32	Positive (+) connection (30), in dash panel wiring harness
D112	Connection -10-, in engine compartment wiring harness
<fo:external-graphic src="/../PDOC/samba/tools/png-convert/out//slp/ft_icons/m_k_m.png" content-width="20pt" scaling="uniform"/>	Only models with automatic gearbox

satelettronica

Simos control unit, ignition transformer

J361	Simos control unit
N152	Ignition transformer
P	Spark plug connector
Q	Spark plugs
SB34	Fuse -34- on fuse box
T4m	4-pin connector, yellow, on ignition transformer
T10g	10-pin connector, red, coupling station under relay carrier, left
T121	121-pin connector
241	Earth connection -2-, engine earth, in engine wiring harness
607	Earth point, on left in plenum chamber

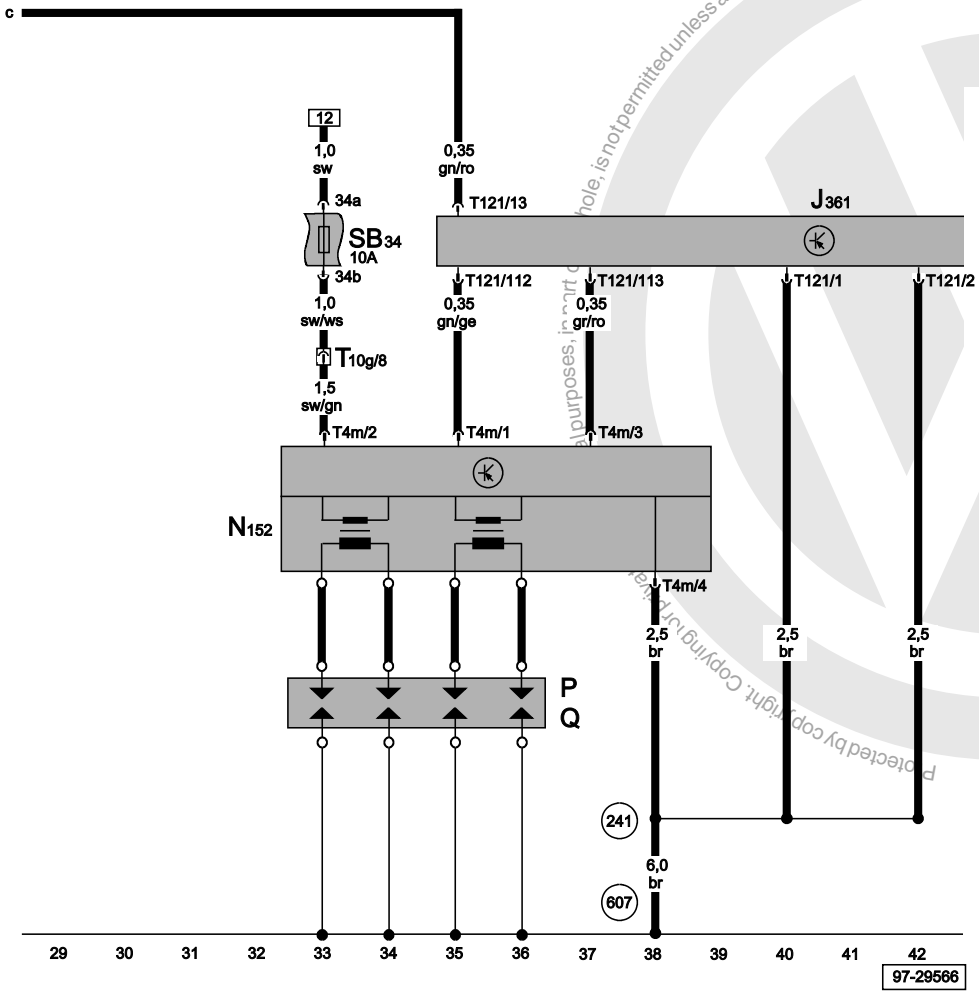

ws	=	white
sw	=	black
ro	=	red
br	=	brown
gn	=	green
bl	=	blue
gr	=	grey
li	=	purple
ge	=	yellow
or	=	orange
rs	=	pink

Protected by copyright. Copying for private and commercial purposes, in part or in whole, is not permitted unless authorised by Volkswagen AG. Volkswagen AG does not guarantee or accept any liability with respect to the correctness of information in this document. Copyright by Volkswagen AG.

satelettronica

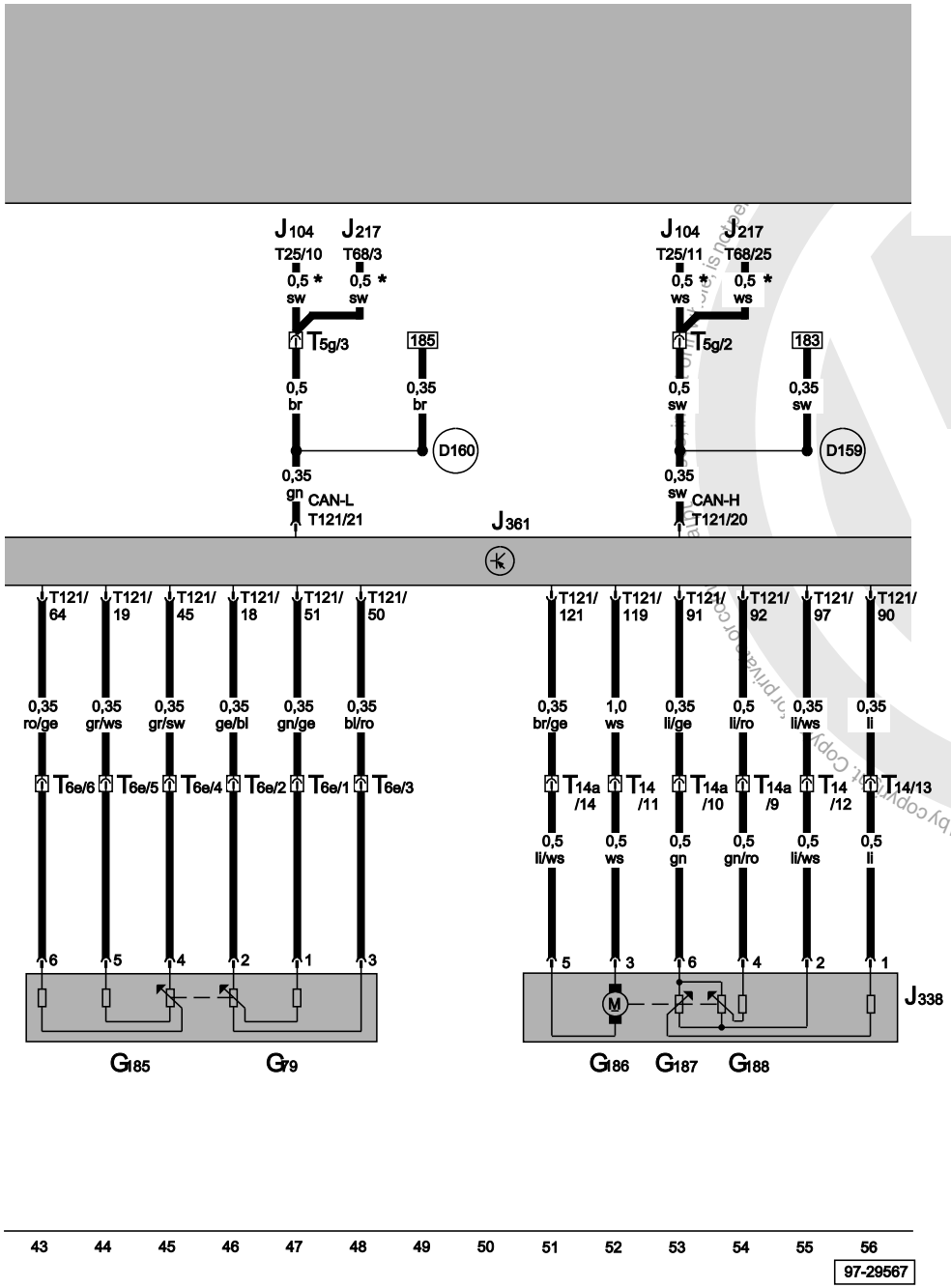

Simos control unit, accelerator pedal position sender, throttle valve control unit

G79	Accelerator pedal position sender
G185	Accelerator pedal position sender -2-
G186	Throttle valve drive (electric throttle operation)
G187	Throttle valve drive angle sender -1- (electric throttle operation)
G188	Throttle valve drive angle sender -2- (electric throttle operation)
J104	ABS with EDL control unit
J217	Automatic gearbox control unit
J338	Throttle valve control unit
J361	Simos control unit
T5g	5-pin connector, pink, coupling station under relay carrier, left
T6e	6-pin connector, near accelerator pedal position sender
T14	14-pin connector, in engine compartment
T14a	14-pin connector, in engine compartment
T25	25-pin connector
T68	68-pin connector
T121	121-pin connector
D159	Connection (high bus), in interior wiring harness
D160	Connection (low bus), in engine compartment wiring harness
*	Depends on equipment

ws	=	white
sw	=	black
ro	=	red
br	=	brown
gn	=	green
bl	=	blue
gr	=	grey
li	=	purple
ge	=	yellow
or	=	orange
rs	=	pink

Protected by copyright. Copyright by Volkswagen AG.
Volkswagen AG. Volkswagen AG does not guarantee the accuracy, completeness, reliability and currentness of the information in this document. Copyright by Volkswagen AG.
satelettronica

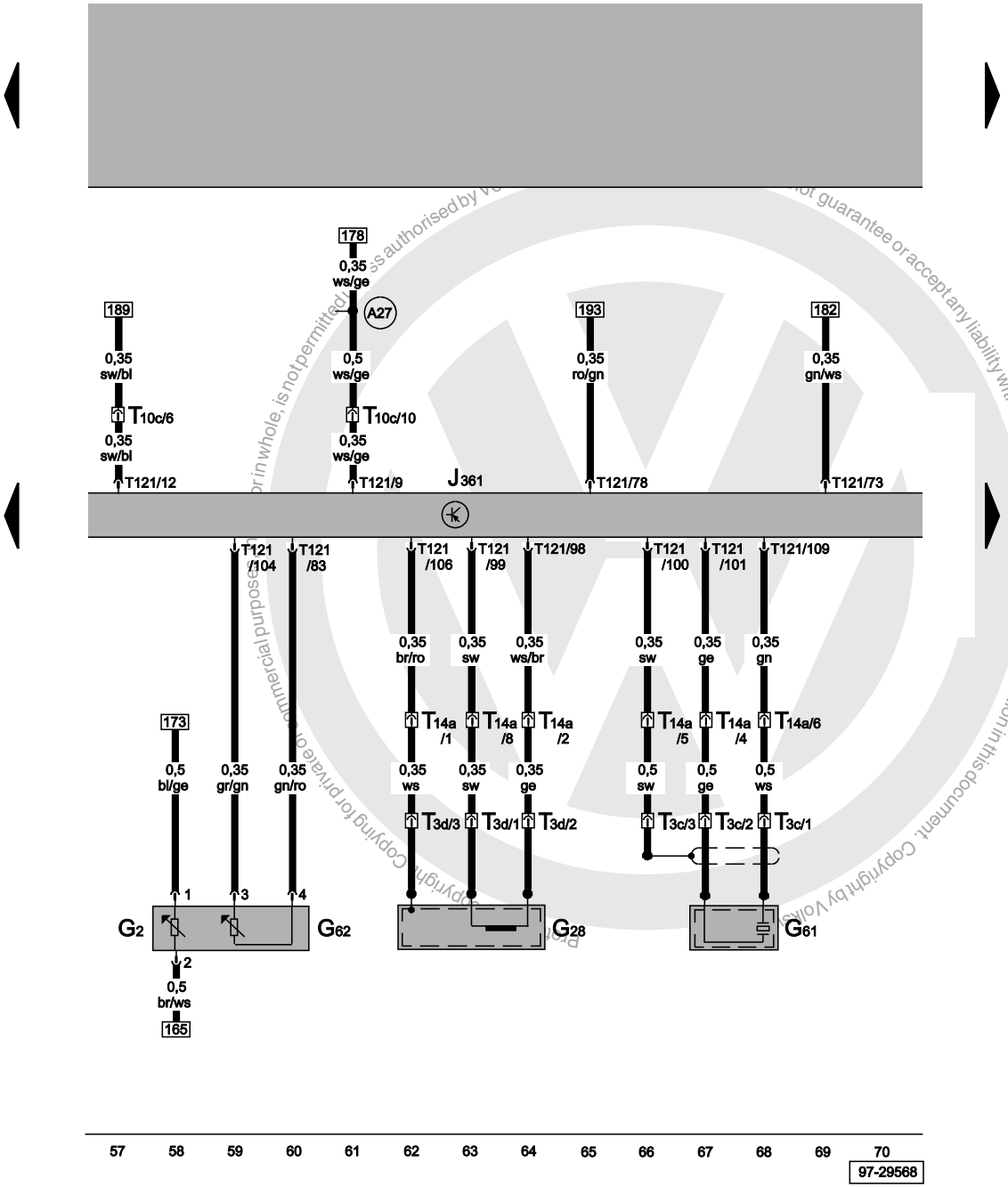

Simos control unit, coolant temperature sender, engine speed sender, knock sensor I

G2	Coolant temperature sender
G28	Engine speed sender
G61	Knock sensor I
G62	Coolant temperature sender
J361	Simos control unit
T3c	3-pin connector, near knock sensor I
T3d	3-pin connector, near engine speed sender
T10c	10-pin connector, brown, coupling station under relay carrier, left
T14a	14-pin connector, in engine compartment
T121	121-pin connector, on Motronic control unit
A27	Connection (speed signal), in dash panel wiring harness

ws	=	white
sw	=	black
ro	=	red
br	=	brown
gn	=	green
bl	=	blue
gr	=	grey
li	=	purple
ge	=	yellow
or	=	orange
rs	=	pink

satelettronica

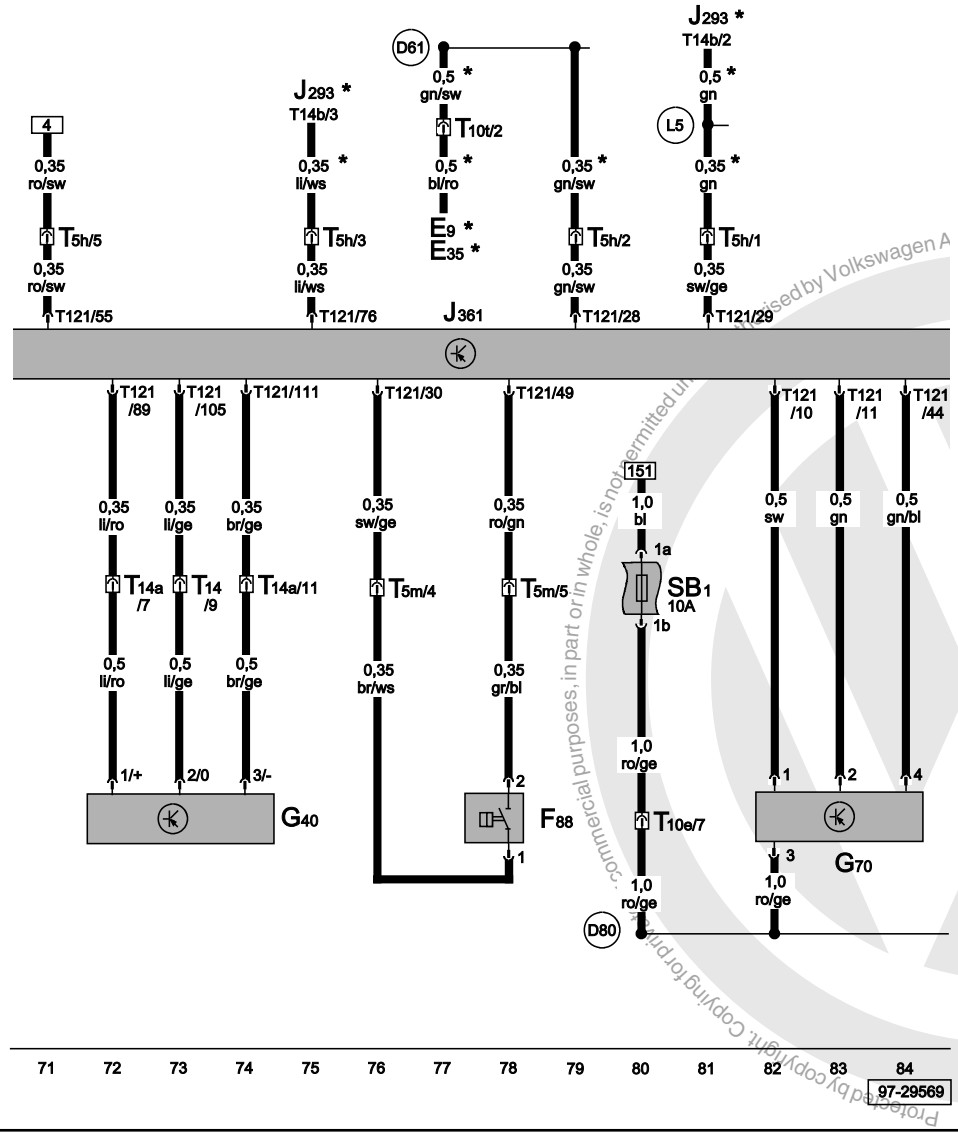

Simos control unit, Hall sender, power assisted steering pressure switch, air mass meter

E9	Fresh air blower switch
E35	Air conditioner switch
F88	Power assisted steering pressure switch
G40	Hall sender
G70	Air mass meter
J293	Radiator fan control unit
J361	Simos control unit
SB1	Fuse -1- on fuse box
T5h	5-pin connector, brown, coupling station under relay carrier, left
T5m	5-pin connector, in engine compartment
T10e	10-pin connector, green, coupling station under relay carrier, left
T10t	10-pin connector, coupling station under relay carrier, left
T14	14-pin connector, in engine compartment
T14a	14-pin connector, in engine compartment
T14b	14-pin connector, on radiator fan control unit
T121	121-pin connector
D61	Connection (air conditioner), in engine compartment wiring harness
D80	Positive (+) connection (87a - for activated charcoal filter system solenoid valve), in engine compartment wiring harness
L5	Connection -1-, in air conditioner wiring harness
*	Only models with air conditioner

ws	=	white
sw	=	black
ro	=	red
br	=	brown
gn	=	green
bl	=	blue
gr	=	grey
li	=	purple
ge	=	yellow
or	=	orange
rs	=	pink

Protected by copyright. Copying for private or commercial purposes, in part or in whole, is not permitted unless authorised by Volkswagen AG. Volkswagen AG does not guarantee or assume any liability with respect to the correctness of information in this document. Copyright by Volkswagen AG.

satelettronica

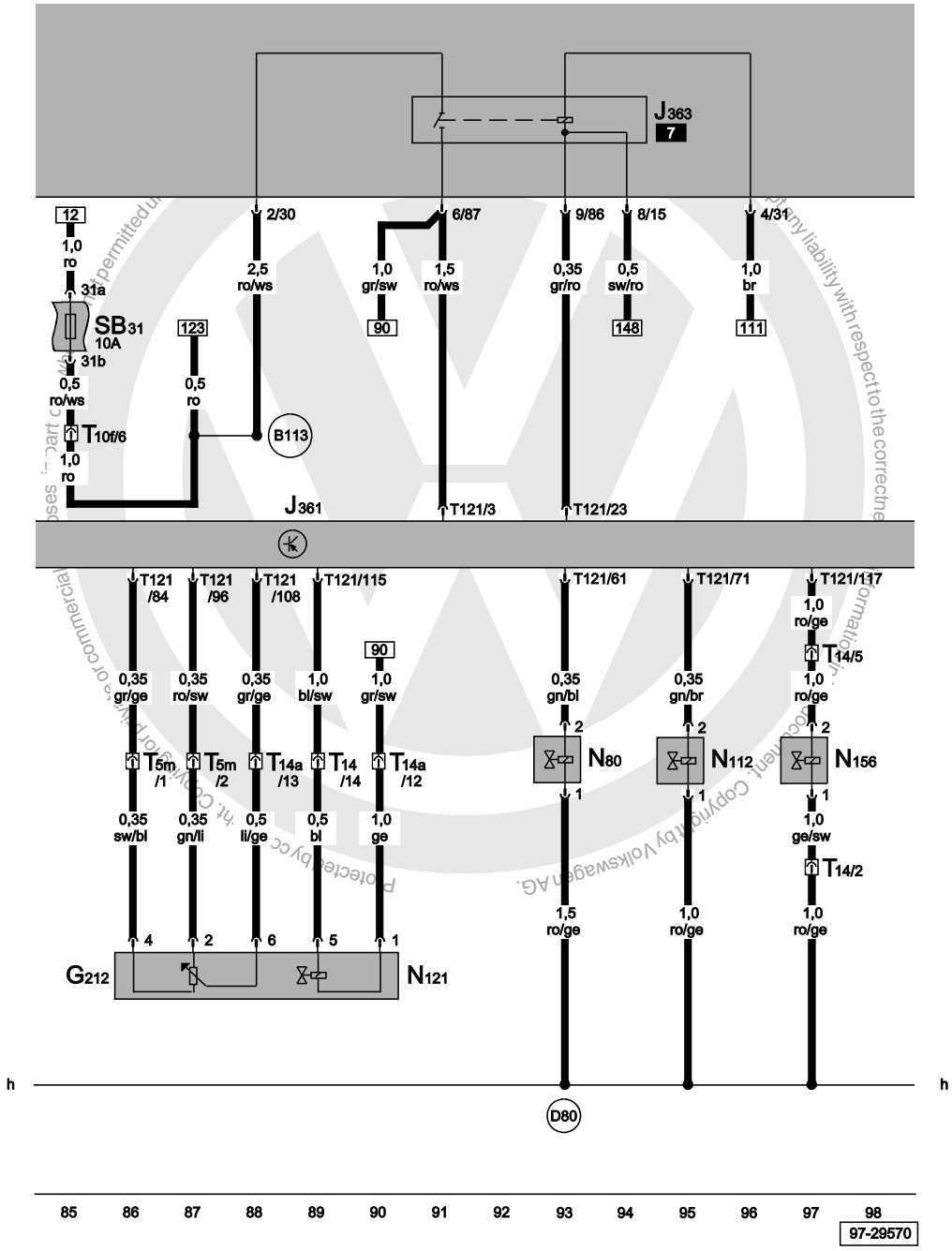

Exhaust gas recirculation potentiometer, exhaust gas recirculation frequency valve, activated charcoal filter system solenoid valve 1, secondary air inlet valve, Intake manifold change-over valve

G212	Exhaust gas recirculation potentiometer
J361	Simos control unit
J363	Current supply relay for Simos control unit
N80	Activated charcoal filter system solenoid valve 1 (pulsed)
N112	Secondary air inlet valve
N121	Exhaust gas recirculation frequency valve
N156	Intake manifold change-over valve
SB31	Fuse -31- on fuse box
T5m	5-pin connector
T10f	10-pin connector, purple, coupling station under relay carrier, left
T14	14-pin connector, in engine compartment
T14a	14-pin connector, in engine compartment
T121	121-pin connector
B113	Positive (+) connection (30a), in left interior wiring harness
D80	Positive (+) connection (87a - for activated charcoal filter system solenoid valve), in engine compartment wiring harness

ws	=	white
sw	=	black
ro	=	red
br	=	brown
gn	=	green
bl	=	blue
gr	=	grey
li	=	purple
ge	=	yellow
or	=	orange
rs	=	pink

satelettronica

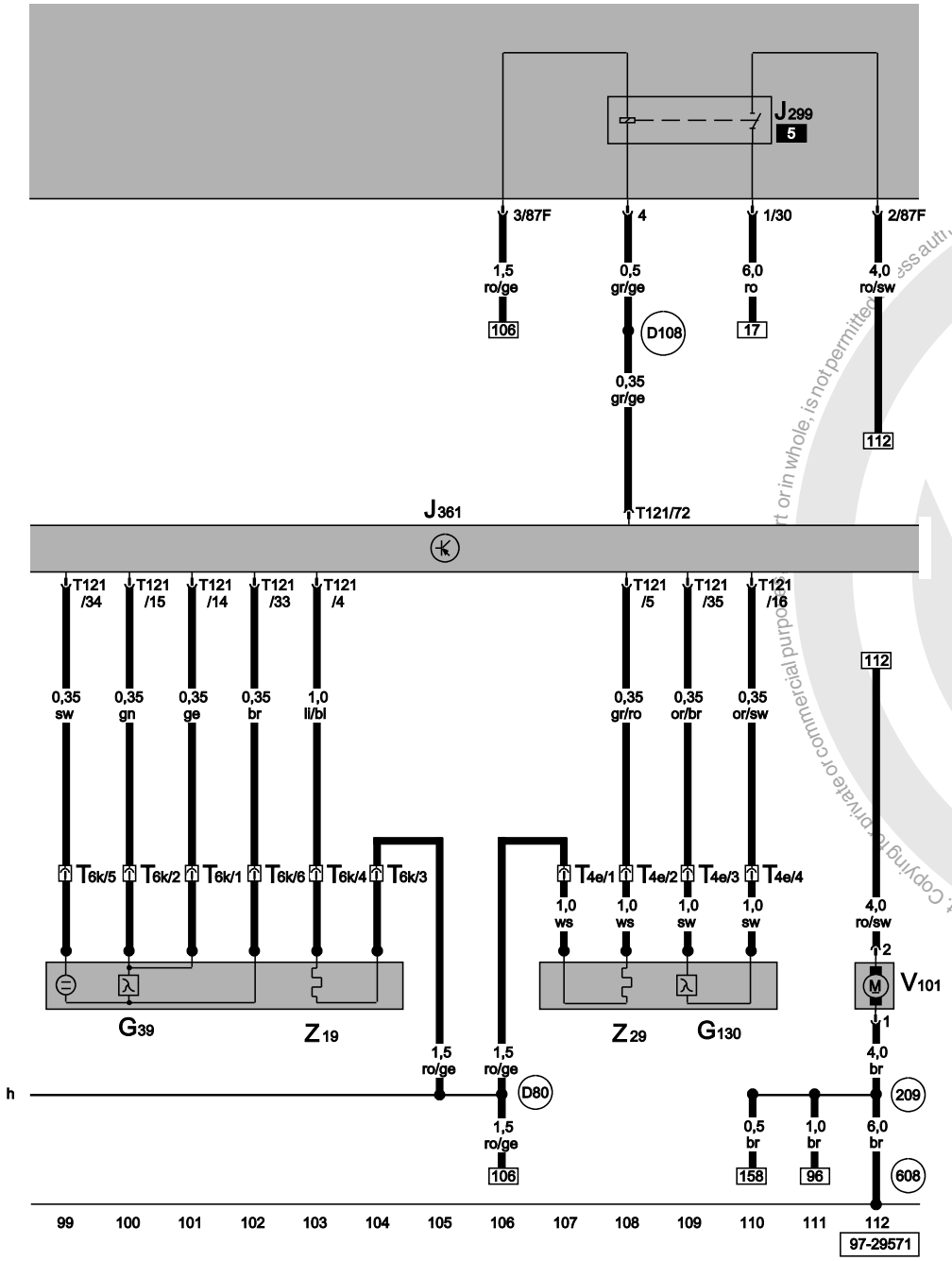

Simos control unit, lambda probe, lambda probe after catalyst, activated charcoal filter system solenoid valve 1, secondary air pump motor

G39	Lambda probe
G130	Lambda probe after catalyst
J299	Secondary air pump relay
J361	Simos control unit
T4e	4-pin connector, near lambda probe
T6k	6-pin connector, near lambda probe
T121	121-pin connector
V101	Secondary air pump motor
Z19	Lambda probe heater
Z29	Lambda probe 1 heater, after catalyst
209	Earth connection -6-, in engine compartment wiring harness
608	Earth point, in centre of plenum chamber
D80	Positive (+) connection (87a - for activated charcoal filter system solenoid valve), in engine compartment wiring harness
D108	Connection -6-, in engine compartment wiring harness

ws	=	white
sw	=	black
ro	=	red
br	=	brown
gn	=	green
bl	=	blue
gr	=	grey
li	=	purple
ge	=	yellow
or	=	orange
rs	=	pink

Protected by copyright. Copying for private or commercial purposes, in whole or in part, is not permitted unless authorised by Volkswagen AG. Volkswagen AG does not guarantee or accept any liability with respect to the correctness of information in this document. Copyright by Volkswagen AG.

satelettronica

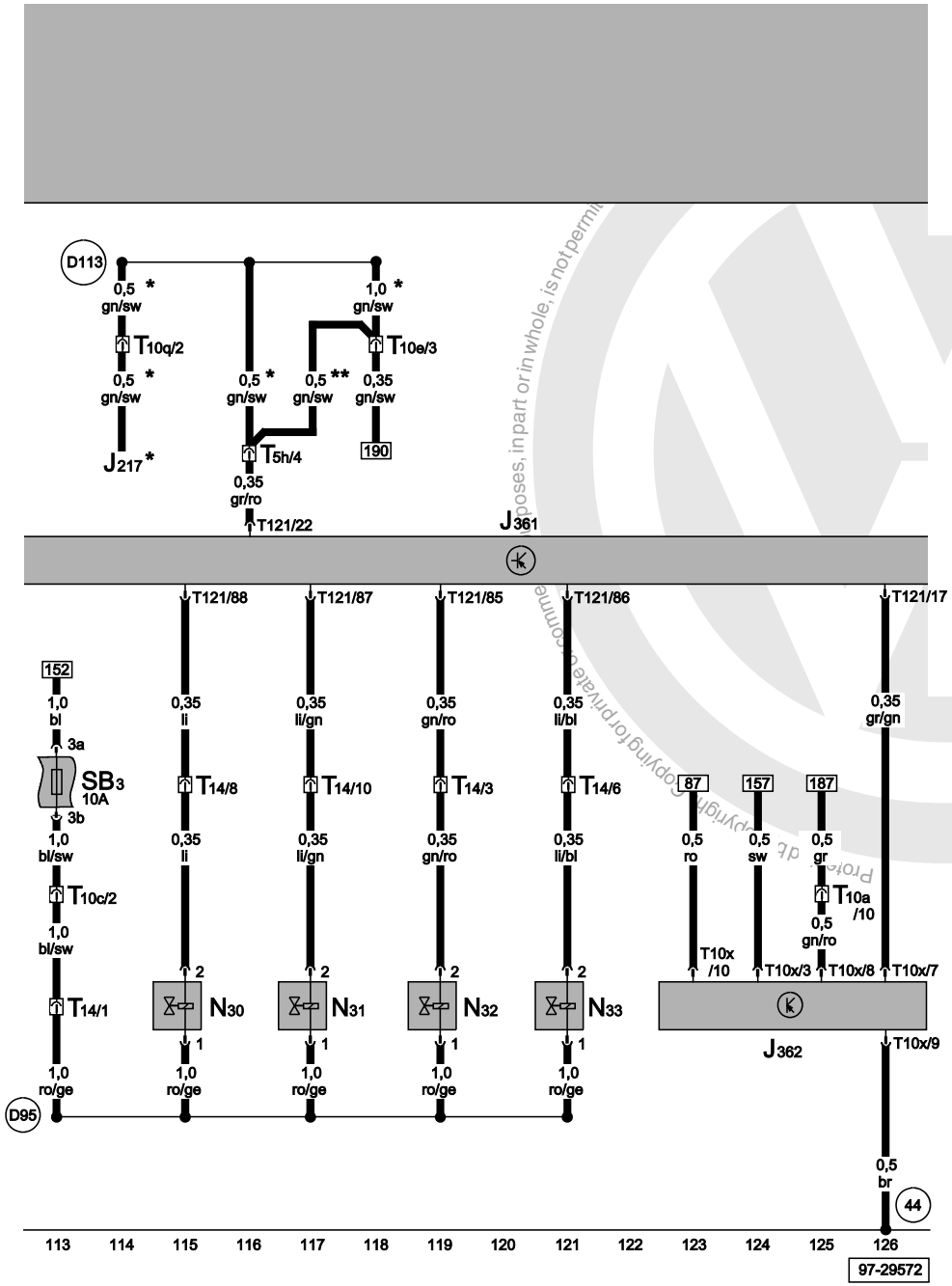

Simos control unit, injectors, immobilizer control unit

J217	Automatic gearbox control unit
J361	Simos control unit
J362	Immobilizer control unit
N30	Injector, cylinder 1
N31	Injector, cylinder 2
N32	Injector, cylinder 3
N33	Injector, cylinder 4
SB3	Fuse -3- on fuse box
T5h	5-pin connector, brown, coupling station under relay carrier, left
T10a	10-pin connector, black, coupling station under relay carrier, left
T10c	10-pin connector, brown, coupling station under relay carrier, left
T10e	10-pin connector, green, coupling station under relay carrier, left
T10q	10-pin connector, blue, coupling station under relay carrier, left
T10x	10-pin connector, on immobilizer control unit
T14	14-pin connector, in engine compartment
T121	121-pin connector
44	Earth point, lower part of left A-pillar
D95	Connection (injectors), in engine compartment wiring harness
D113	Connection -11-, in engine compartment wiring harness
*	Only models with automatic gearbox
**	Only models with manual gearbox

ws	=	white
sw	=	black
ro	=	red
br	=	brown
gn	=	green
bl	=	blue
gr	=	grey
li	=	purple
ge	=	yellow
or	=	orange
rs	=	pink

satelettronica

Simos control unit, brake pedal switch, brake light switch, clutch pedal switch

F	Brake light switch
F36	Clutch pedal switch
F63	Brake pedal switch
J104	ABS with EDL control unit
J361	Simos control unit
M9	Brake light bulb, left
M10	Brake light bulb, right
M25	High level brake light bulb
SB15	Fuse -15- on fuse box
SB24	Fuse -24- on fuse box
T10a	10-pin connector, black, coupling station under relay carrier, left
T10f	10-pin connector, purple, coupling station under relay carrier, left
T10g	10-pin connector, red, coupling station under relay carrier, left
T121	121-pin connector
D52	Positive (+) connection (15a), in engine compartment wiring harness
D73	Positive (+) connection (54), in engine compartment wiring harness
D109	Connection -7-, in engine compartment wiring harness

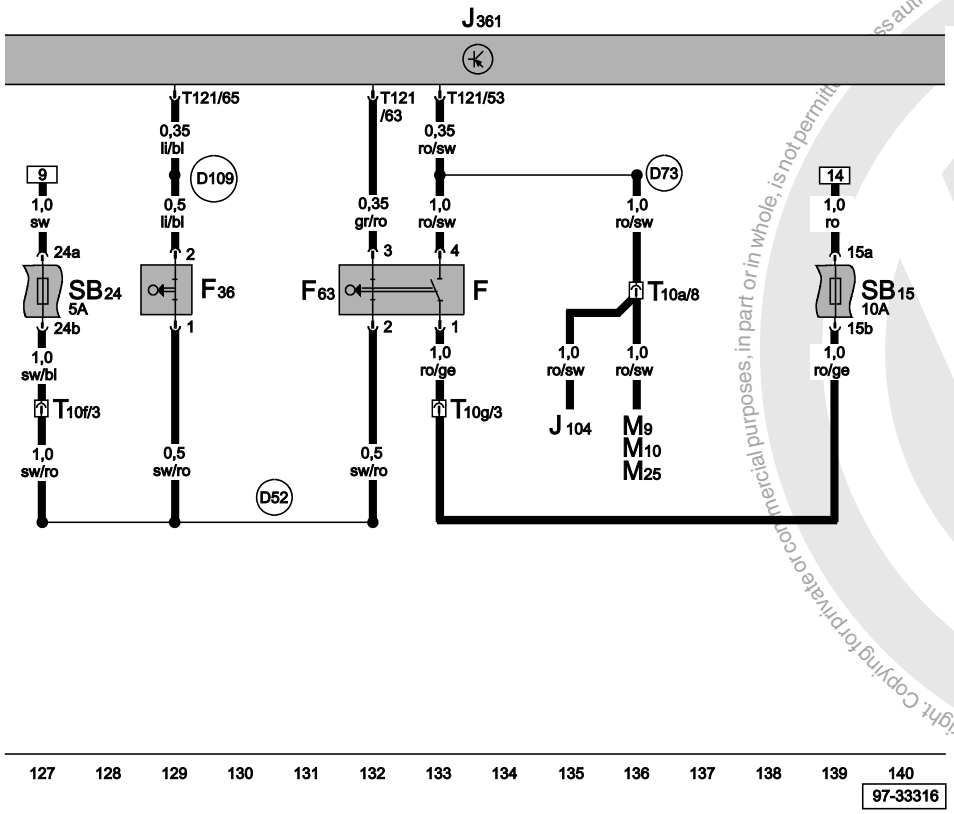

ws	=	white
sw	=	black
ro	=	red
br	=	brown
gn	=	green
bl	=	blue
gr	=	grey
li	=	purple
ge	=	yellow
or	=	orange
rs	=	pink

Protected by copyright. Copying for private or commercial purposes, in part or in whole, is not permitted unless authorised by Volkswagen AG. Volkswagen AG does not guarantee or accept any liability with respect to the correctness of information in this document. Copyright by Volkswagen AG.
satelettronica

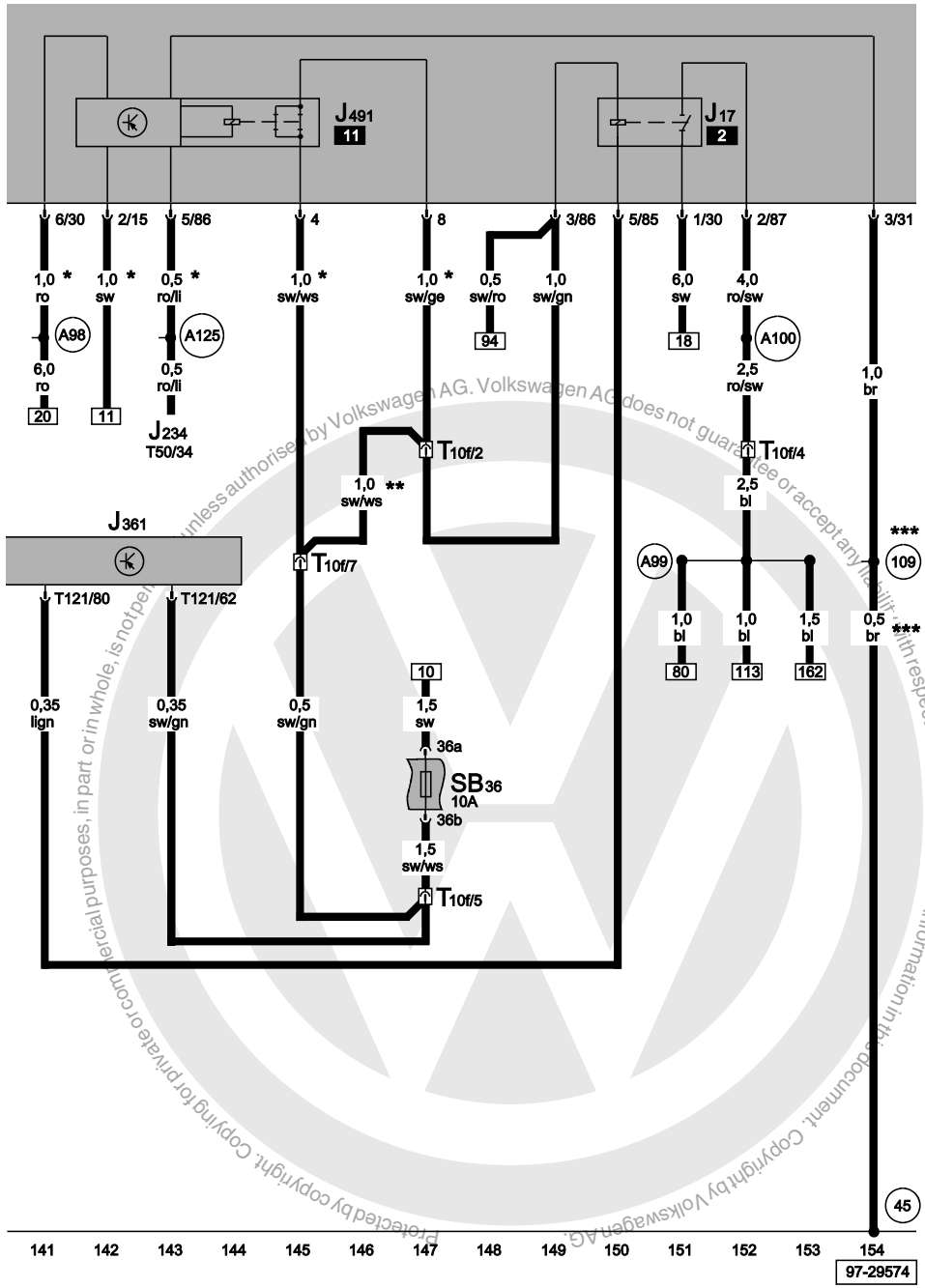

Simos control unit, fuel pump relay, fuel shut-off control unit (Crash)

J17	Fuel pump relay
J361	Simos control unit
J234	Airbag control unit
J491	Fuel shut-off control unit (crash)
SB36	Fuse -36- on fuse box
T10f	10-pin connector, purple, coupling station under relay carrier, left
T50	50-pin connector, on airbag control unit
T121	121-pin connector
45	Earth point, behind dash panel - centre
109	Earth connection, in airbag wiring harness
A98	Positive (+) connection -4- (30), in dash panel wiring harness
A99	Connection -1- (87), in dash panel wiring harness
A100	Connection -2- (87), in dash panel wiring harness
A125	Connection (crash signal), in dash panel wiring harness
*	Only models with airbags
**	Only models without airbags
***	Does not models with driver airbag

ws	=	white
sw	=	black
ro	=	red
br	=	brown
gn	=	green
bl	=	blue
gr	=	grey
li	=	purple
ge	=	yellow
or	=	orange
rs	=	pink

Protected by copyright. Copying for private or commercial purposes, in part or in whole, is not permitted unless authorised by Volkswagen AG. Volkswagen AG does not guarantee or accept any liability with respect to the correctness of information in this document. Copyright by Volkswagen AG.

satelettronica

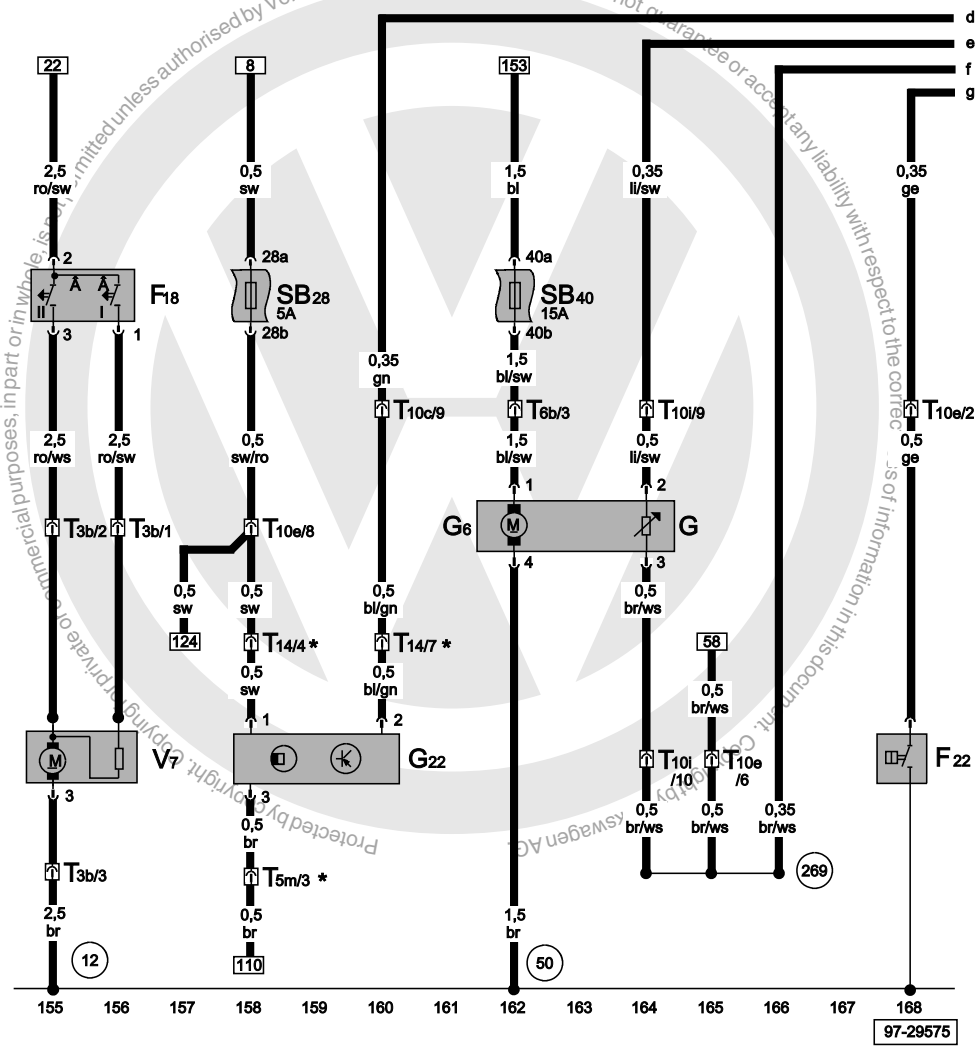

Oil pressure switch, fuel pump, speedometer sender, radiator fan, radiator fan thermo-switch, fuel gauge sender

F18	Radiator fan thermo-switch
F22	Oil pressure switch (0,3 bar)
G	Fuel gauge sender
G6	Fuel pump (pre-supply pump)
G22	Speedometer sender (Hall sender, on gearbox)
SB28	Fuse -28- on fuse box
SB40	Fuse -40- on fuse box
T3b	3-pin connector, on radiator fan
T5m	5-pin connector
T6b	6-pin connector, grey, coupling station under relay carrier, left
T10c	10-pin connector, brown, coupling station under relay carrier, left
T10e	10-pin connector, green, coupling station under relay carrier, left
T10i	10-pin connector, orange, coupling station under relay carrier, left
T14	14-pin connector, in engine compartment
V7	Radiator fan
12	Earth point, left in engine compartment
50	Earth point, on left luggage compartment
269	Earth connection (sender earth) -1-, in dash panel wiring harness
*	Only models with automatic gearbox

ws	=	white
sw	=	black
ro	=	red
br	=	brown
gn	=	green
bl	=	blue
gr	=	grey
li = purple
ge = yellow
or = orange
rs = pink

Protected by copyright. Copying for private or commercial purposes, in part or in whole, is not permitted unless authorised by Volkswagen AG. Volkswagen AG does not guarantee or accept any liability with respect to the correctness of information in this document. Copyright by Volkswagen AG.

satelettronica

authorised by Volkswagen AG. Volkswagen AG does not guarantee or accept any liability with respect to the correctness of information in this document. Copying for private or commercial purposes, in part or in whole, is not permitted.

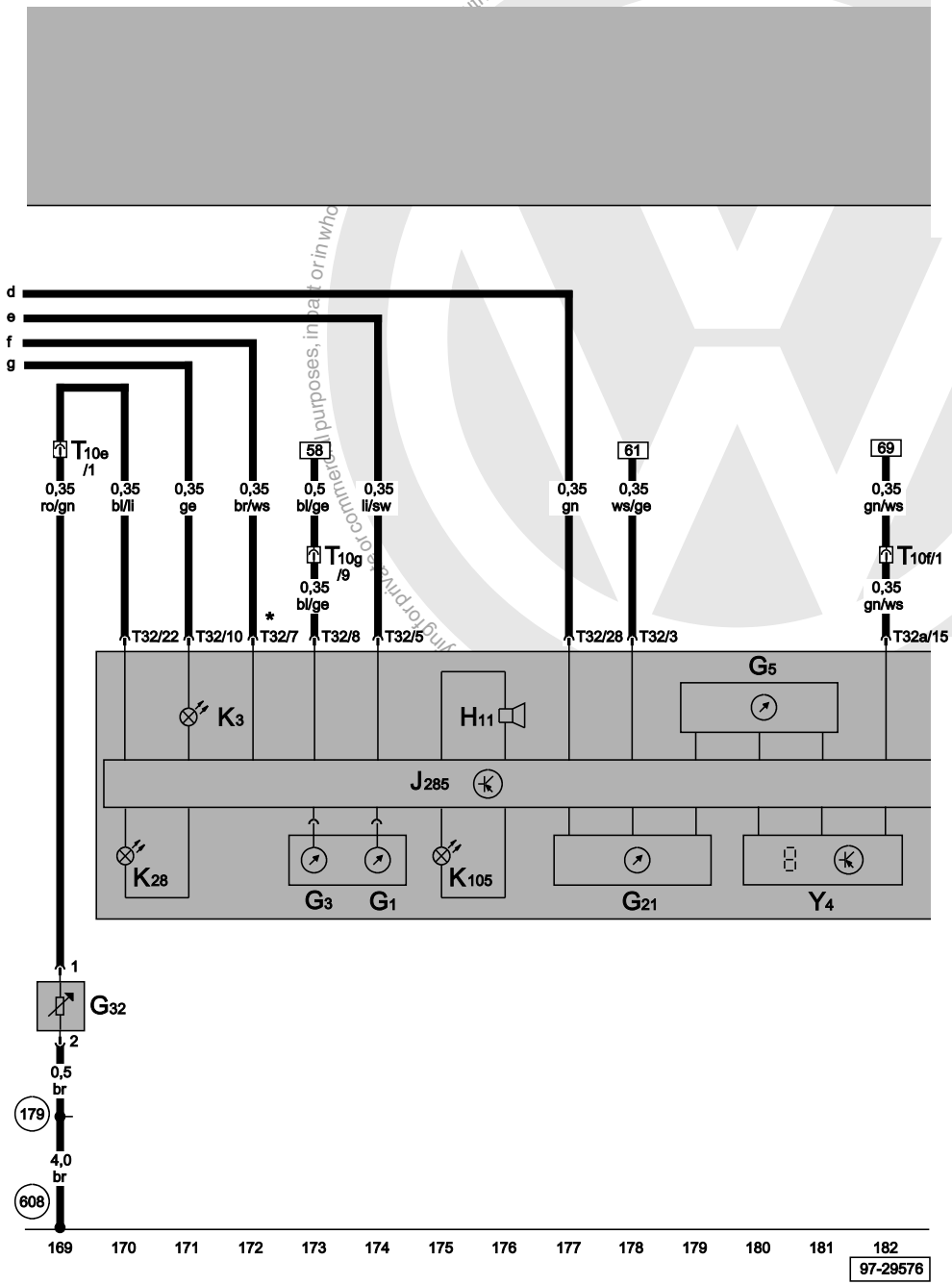

Control unit with display in dash panel insert, coolant shortage indicator sender, oil pressure warning lamp, rev. counter, speedometer, odometer display

G1	Fuel gauge
G3	Coolant temperature gauge
G5	Rev. counter
G21	Speedometer
G32	Coolant shortage indicator sender
H11	Oil pressure warning buzzer
J285	Control unit with display in dash panel insert
K3	Oil pressure warning lamp
K28	Coolant temperature/coolant shortage warning lamp
K105	Reserve fuel warning lamp
T10e	10-pin connector, green, coupling station under relay carrier, left
T10f	10-pin connector, purple, coupling station under relay carrier, left
T10g	10-pin connector, red, coupling station under relay carrier, left
T32	32-pin connector, blue, on dash panel insert
T32a	32-pin connector, green, on dash panel insert
Y4	Odometer display
179	Earth connection, in left headlight wiring harness
608	Earth point, in centre of plenum chamber
*	Output for signal earth

ws	=	white
sw	=	black
ro	=	red
br	=	brown
gn	=	green
bl	=	blue
gr	=	grey
li	=	purple
ge	=	yellow
or	=	orange
rs	=	pink

satelettronica

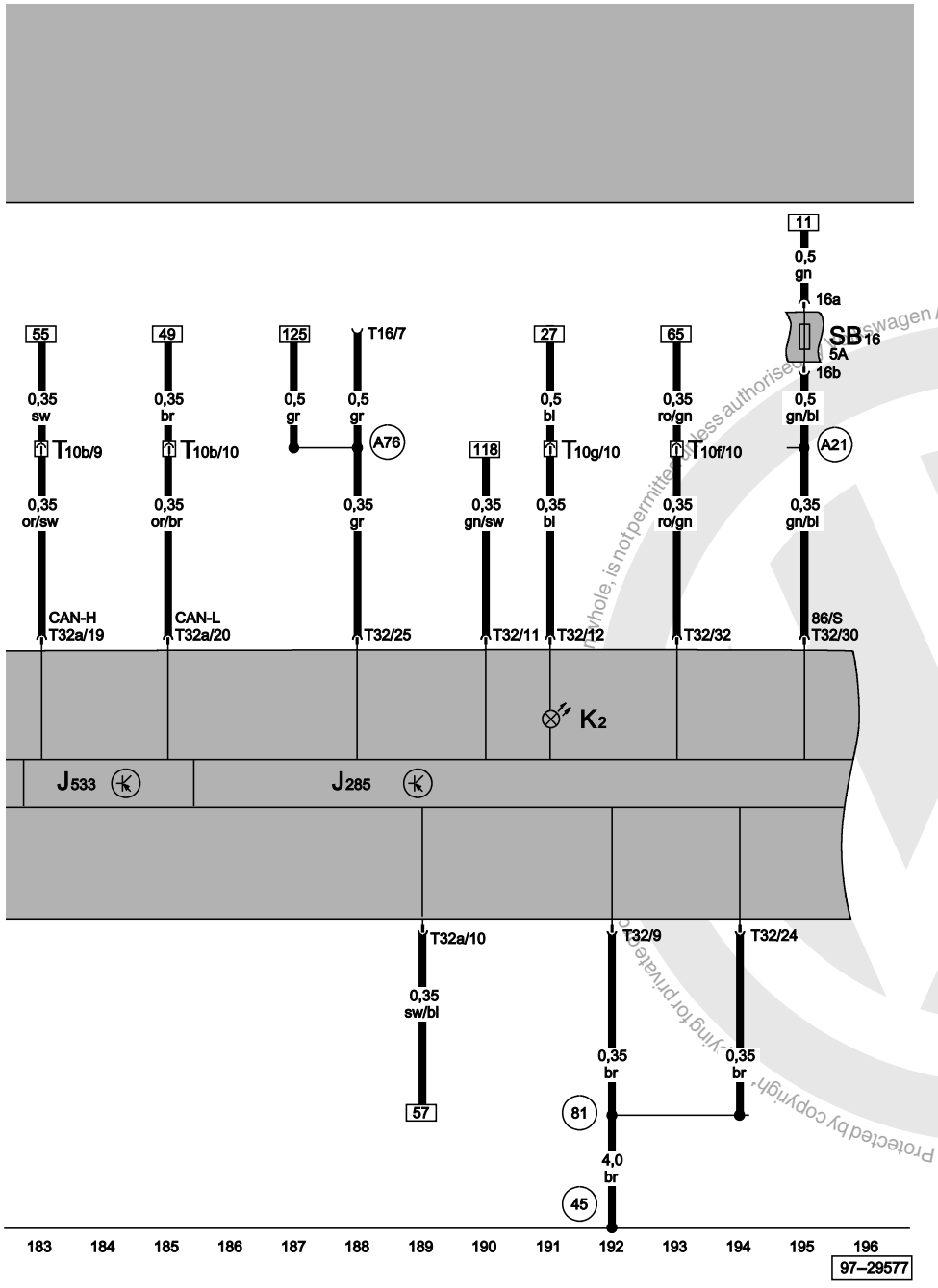

Control unit with display in dash panel insert, diagnostic connector, alternator warning lamp, data bus diagnostic interface

J285	Control unit with display in dash panel insert
J533	Data bus diagnostic interface
K2	Alternator warning lamp
SB16	Fuse -16- on fuse box
T10b	10-pin connector, white, coupling station under relay carrier, left
T10f	10-pin connector, purple, coupling station under relay carrier, left
T10g	10-pin connector, red, coupling station under relay carrier, left
T16	16-pin connector, diagnostic connector
T32	32-pin connector, blue, on dash panel insert
T32a	32-pin connector, green, on dash panel insert
45	Earth point, behind dash panel - centre
81	Earth connection -1-, in dash panel wiring harness
A21	Connection (86s), in dash panel wiring harness
A76	Connection (diagnosis wire K), in dash panel wiring harness

ws	=	white
sw	=	black
ro	=	red
br	=	brown
gn	=	green
bl	=	blue
gr	=	grey
li = purple
ge = yellow
or = orange
rs = pink

Protected by copyright. Copying for private or commercial purposes, in whole or in part, is not permitted unless authorised by Volkswagen AG. Volkswagen AG does not give any guarantee or accept any liability with respect to the correctness of information in this document. Copyright by Volkswagen AG.

satelettronica

Basic equipment

From May 2001

For alternatives to relay and fuse positions as well as multi-pin connector wiring - see "Fitting locations" section.

Relay locations on relay plate:

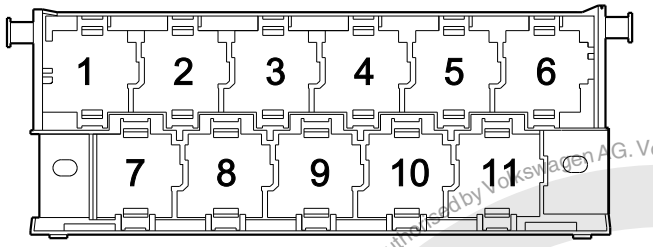

97-22850

4 - Dual tone horn relay (404)
5 - X contact relief relay (100)
8 - Automatic intermittent wash/wipe relay (19)
9 - Rear window wiper/washer relay (174)

Note:

- *The number in brackets behind the part designation denotes the control number on the housing.*

Fuse colours

30 A - green
25 A - white
20 A - yellow
15 A - blue
10 A - red
7.5 A - brown
5 A - beige
3 A - purple

Protected by copyright. Copying for private or commercial purposes, in part or in whole, is not permitted unless authorised by Volkswagen AG. Volkswagen AG does not guarantee or accept any liability with respect to the correctness of information in this document. Copyright by Volkswagen AG.

satelettronica

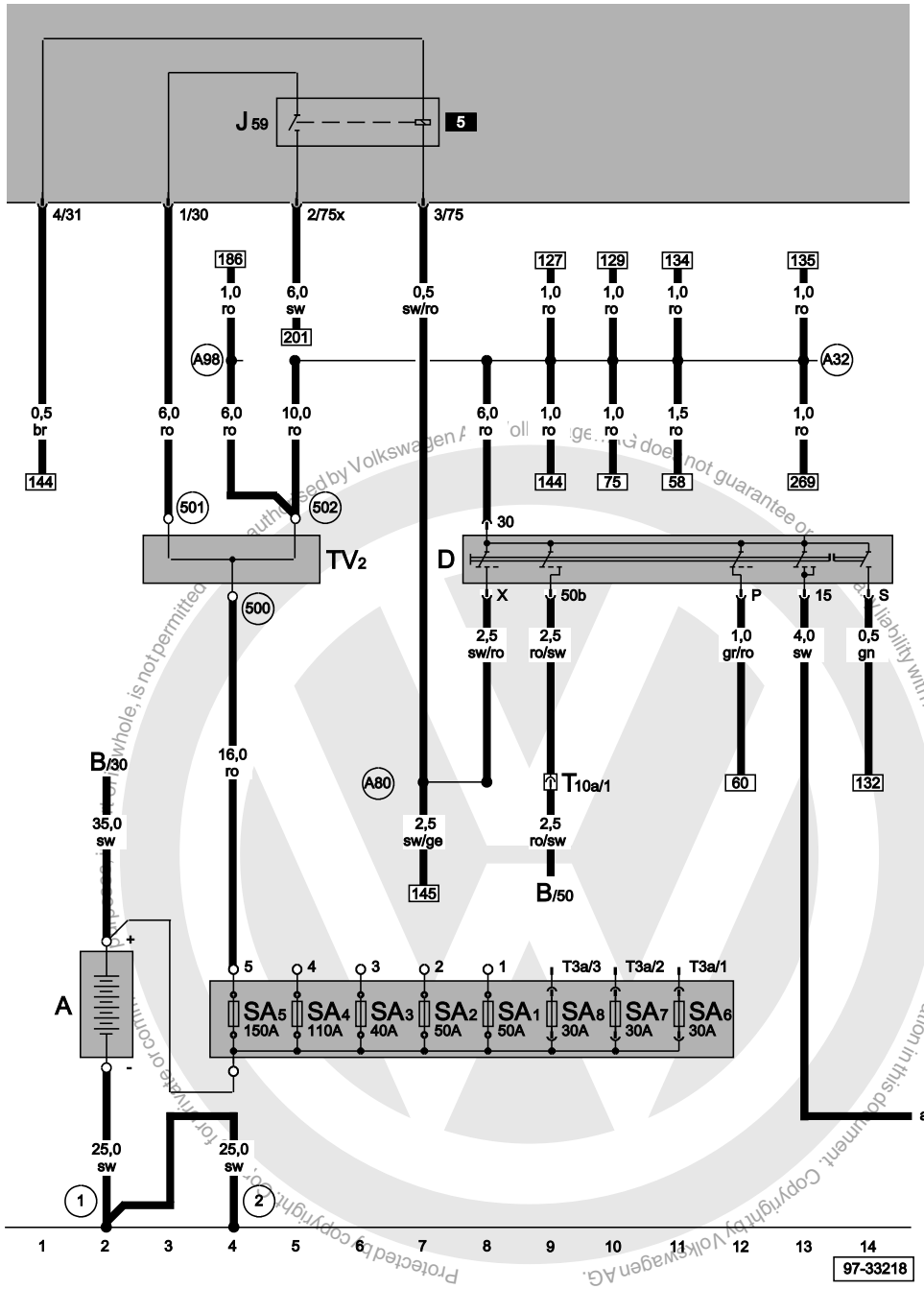

Fuses, battery, ignition/starter switch, X contact relief relay

A	Battery
B	Starter
D	Ignition/starter switch
J59	X contact relief relay
SA1	Fuse -1- on battery fuse box
SA2	Fuse -2- on battery fuse box
SA3	Fuse -3- on battery fuse box
SA4	Fuse -4- on battery fuse box
SA5	Fuse -5- on battery fuse box
SA6	Fuse -6- on battery fuse box
SA7	Fuse -7- on battery fuse box
SA8	Fuse -8- on battery fuse box
T3a	3-pin connector, on battery fuse box
T10a	10-pin connector, black, coupling station under relay carrier, left
TV2	Terminal 30 junction box
1	Earth strap, battery - body
2	Earth strap, gearbox - body
500	Screw connection -1- (30), on relay plate
501	Screw connection -2- (30), on relay plate
502	Screw connection -1- (30a), on relay plate
A32	Positive (+) connection (30), in dash panel wiring harness
A80	Connection -1- (X), in dash panel wiring harness
A98	Positive (+) connection -4- (30), in dash panel wiring harness

ws	=	white
sw	=	black
ro	=	red
br	=	brown
gn	=	green
bl	=	blue
gr	=	grey
li	=	purple
ge	=	yellow
or	=	orange
rs	=	pink

satelettronica

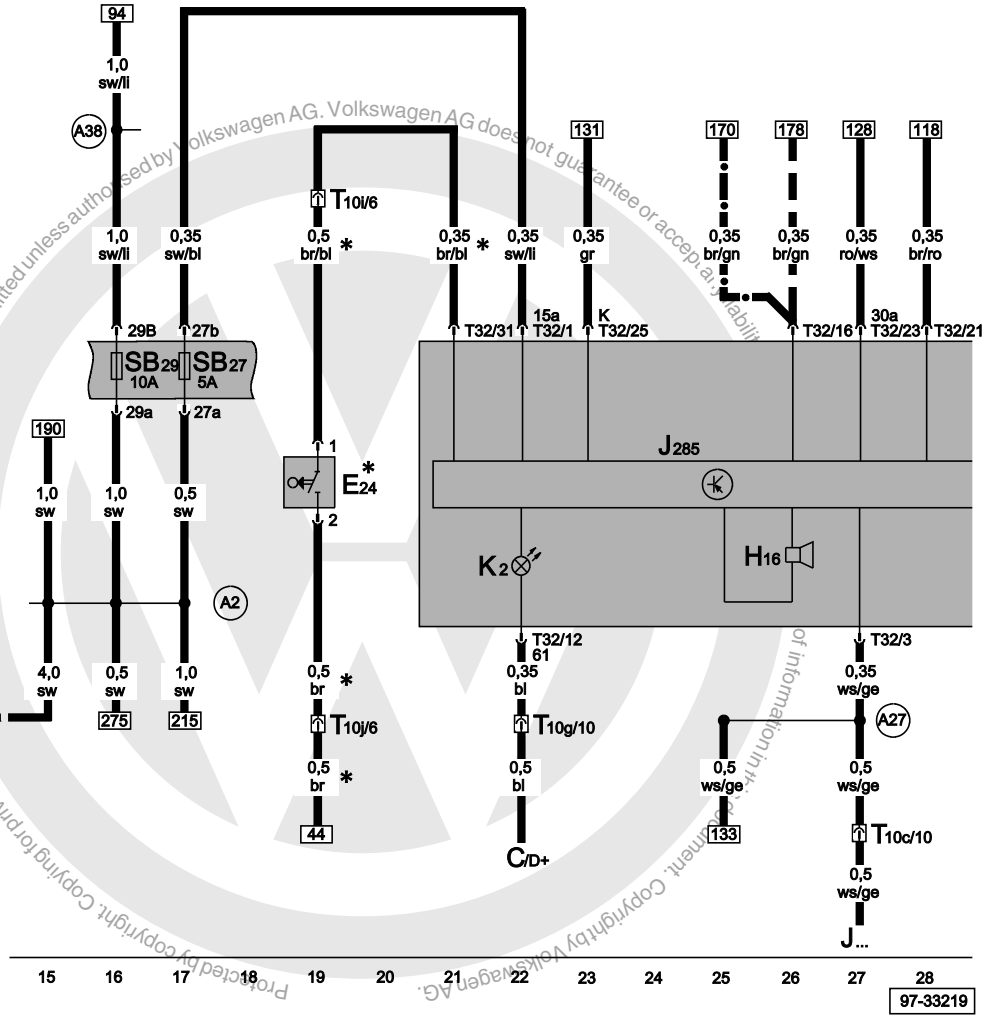

Fuses, belt switch, driver's side, dash panel insert

C	Alternator
E24	Belt switch, driver's side
H16	Lights switched on warning buzzer
J...	Engine control units
J285	Control unit with display in dash panel insert
K2	Alternator warning lamp
SB27	Fuse -27- on fuse box
SB29	Fuse -29- on fuse box
T10c	10-pin connector, brown, coupling station under relay carrier, left
T10g	10-pin connector, red, coupling station under relay carrier, left
T10i	10-pin connector, orange, coupling station under relay carrier, left
T10j	10-pin connector, grey, coupling station under relay carrier, left
T32	32-pin connector, blue, on dash panel insert
A2	Positive (+) connection (15), in dash panel wiring harness
A27	Connection (speed signal), in dash panel wiring harness
A38	Positive (+) connection -2- (15a), in dash panel wiring harness
*	Only models with seat belt warning
<fo:external-graphic src="/../PDOC/samba/tools/png-convert/out//slp/ft_icons/m_m_m.png" content-width="20pt" scaling="uniform"/>	Only Polo Variant
<fo:external-graphic src="/../PDOC/	Only Polo Classic

ws = white

Protected by copyright. Copying for private or commercial purposes, in part or in whole, is not permitted unless authorised by Volkswagen AG. Volkswagen AG does not guarantee or accept any liability of information in this document. Copyright by Volkswagen AG.

satelettronica

sw	=	black
ro	=	red
br	=	brown
gn	=	green
bl	=	blue
gr	=	grey
li	=	purple
ge	=	yellow
or	=	orange
rs	=	pink

samba/
tools/
png-
convert/
out//slp/
ft_icons/
m_k_m.p
ng"
content-
width="2
0pt"
scaling="
uniform"/
>

Protected by copyright. Copying for private or commercial purposes, in part or in whole, is not permitted unless authorised by Volkswagen AG. Volkswagen AG does not guarantee or accept any liability with respect to the correctness of information in this document. Copyright by Volkswagen AG.

satelettronica

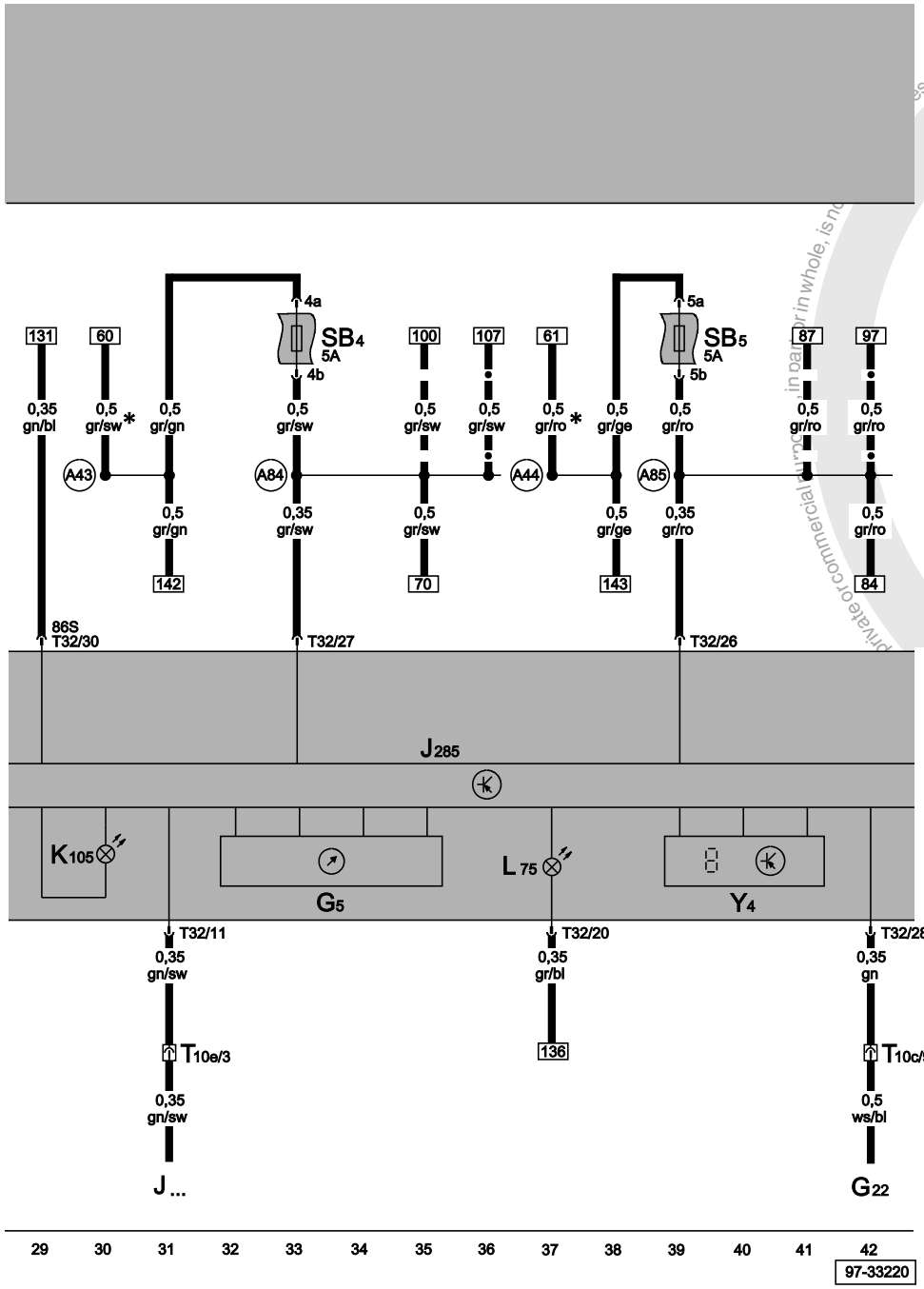

Fuses, speedometer sender, dash panel insert

G5	Rev. counter
G22	Speedometer sender (Hall sender, on gearbox)
J...	Engine control units
J285	Control unit with display in dash panel insert
K105	Reserve fuel warning lamp
L75	Digital display illumination
SB4	Fuse -4- on fuse box
SB5	Fuse -5- on fuse box
T10c	10-pin connector, brown, coupling station under relay carrier, left
T10e	10-pin connector, green, coupling station under relay carrier, left
T32	32-pin connector, blue, on dash panel insert
Y4	Odometer display
A43	Connection (57L), in dash panel wiring harness
A44	Connection (57R), in dash panel wiring harness
A84	Connection (58L), in dash panel wiring harness
A85	Connection (58R), in dash panel wiring harness
*	Only models without daytime driving lights
<fo:external-graphic src="/../PDOC/samba/tools/png-convert/out//slp/ft_icons/m_m_m.png" content-width="20pt" scaling="uniform"/>	Only Polo Variant
<fo:external-graphic src="/../PDOC/	Only Polo Classic

ws = white

Protected by copyright. Copy, in part or in whole, is not permitted without the express authorised by Volkswagen AG. Volkswagen AG does not guarantee or accept any liability with respect to the correctness of information in this document. Copyright by Volkswagen AG.
Private or commercial use, in part or in whole, is not permitted without the express authorised by Volkswagen AG. Volkswagen AG does not guarantee or accept any liability with respect to the correctness of information in this document. Copyright by Volkswagen AG.
satelettronica

sw	=	black
ro	=	red
br	=	brown
gn	=	green
bl	=	blue
gr	=	grey
li	=	purple
ge	=	yellow
or	=	orange
rs	=	pink

samba/
tools/
png-
convert/
out//slp/
ft_icons/
m_k_m.p
ng"
content-
width="2
0pt"
scaling="
uniform"/
>

Protected by copyright. Copying for private or commercial purposes, in part or in whole, is not permitted unless authorised by Volkswagen AG. Volkswagen AG does not guarantee or accept any liability with respect to the correctness of information in this document. Copyright by Volkswagen AG.
satelettronica

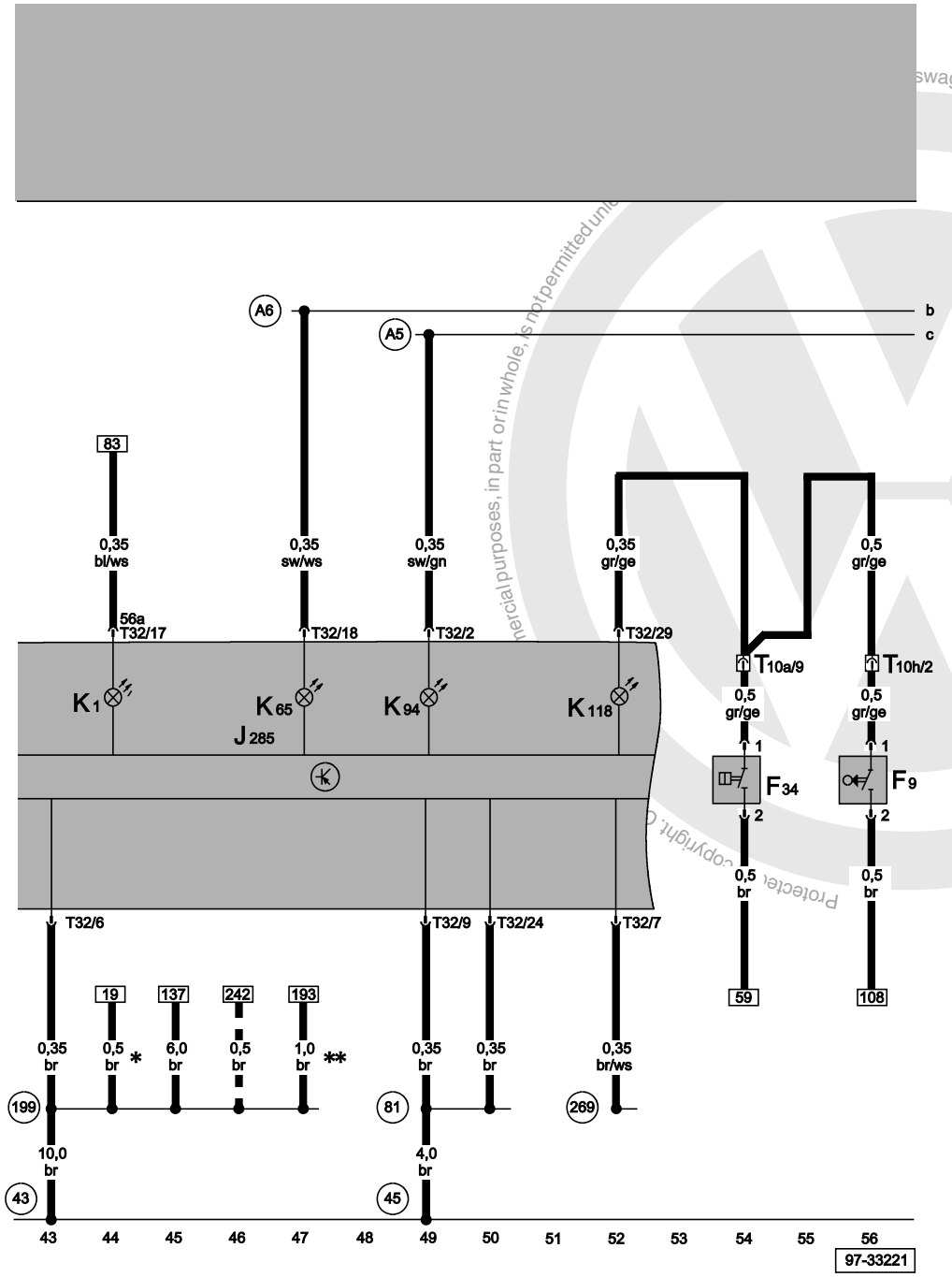

ws = white

Handbrake warning switch, brake fluid level warning contact, dash panel insert

F9	Handbrake warning switch
F34	Brake fluid level warning contact
J285	Control unit with display in dash panel insert
K1	Main beam warning lamp
K65	Left turn signal warning lamp
K94	Right turn signal warning lamp
K118	Brake system warning lamp
T10a	10-pin connector, black, coupling station under relay carrier, left
T10h	10-pin connector, light green, coupling station under relay carrier, left
T32	32-pin connector, blue, on dash panel insert
43	Earth point, lower part of right A-pillar
45	Earth point, behind dash panel - centre
81	Earth connection -1-, in dash panel wiring harness
199	Earth connection -3-, in dash panel wiring harness
269	Earth connection (sender earth) -1-, in dash panel wiring harness
A5	Positive (+) connection (right turn signal), in dash panel wiring harness
A6	Positive (+) connection (left turn signal), in dash panel wiring harness
*	Only models with seat belt warning
**	Only models with dual tone horn
<fo:external-graphic src="/../PDOC/samba/tools/png-convert/out//slp/ft_icons/m_m_m.png" content-width="20pt"	Only Polo Variant

Protected copyright. Copyright by Volkswagen AG.
Volkswagen AG does not guarantee or accept any liability with respect to the correctness of information.
Reproduction, in part or in whole, is not permitted unless for commercial purposes.
satelettronica

sw	=	black	scaling="
ro	=	red	uniform"/
br	=	brown	>
gn	=	green	
bl	=	blue	
gr	=	grey	
li	=	purple	
ge	=	yellow	
or	=	orange	
rs	=	pink	

Protected by copyright. Copying for private or commercial purposes, in part or in whole, is not permitted unless authorised by Volkswagen AG. Volkswagen AG does not guarantee or accept any liability with respect to the correctness of information in this document. Copyright by Volkswagen AG.

satelettronica

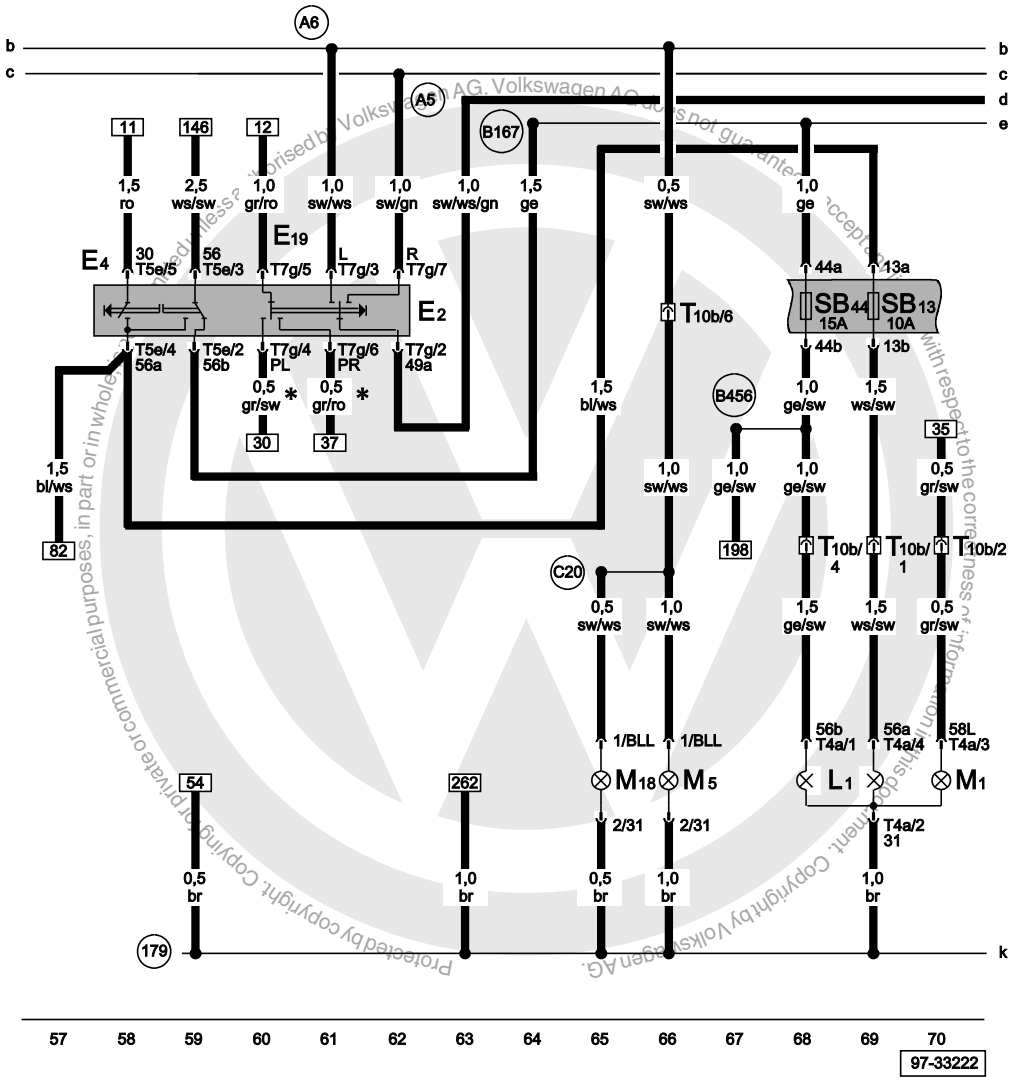

Fuses, turn signal switch, parking light switch, headlight, left, turn signal front left

E2	Turn signal switch
E4	Headlight dipper/flasher switch
E19	Parking light switch
L1	Twin filament bulb for headlight, left
M1	Side light bulb, left
M5	Turn signal bulb, front left
M18	Side turn signal bulb, left
SB13	Fuse -13- on fuse box
SB44	Fuse -44- on fuse box
T4a	4-pin connector, in headlight, left
T5e	5-pin connector
T7g	7-pin connector
T10b	10-pin connector, white, coupling station under relay carrier, left
179	Earth connection, in left headlight wiring harness
A5	Positive (+) connection (right turn signal), in dash panel wiring harness
A6	Positive (+) connection (left turn signal), in dash panel wiring harness
B167	Connection (56b), in interior wiring harness
B456	Connection (56b), in main wiring harness
C20	Connection (turn signal, left), in headlight wiring harness
*	Only models without daytime driving lights

ws	=	white
sw	=	black
ro	=	red
br	=	brown
gn	=	green
bl	=	blue
gr	=	grey
li	=	purple
ge	=	yellow
or	=	orange
rs	=	pink

satelettronica

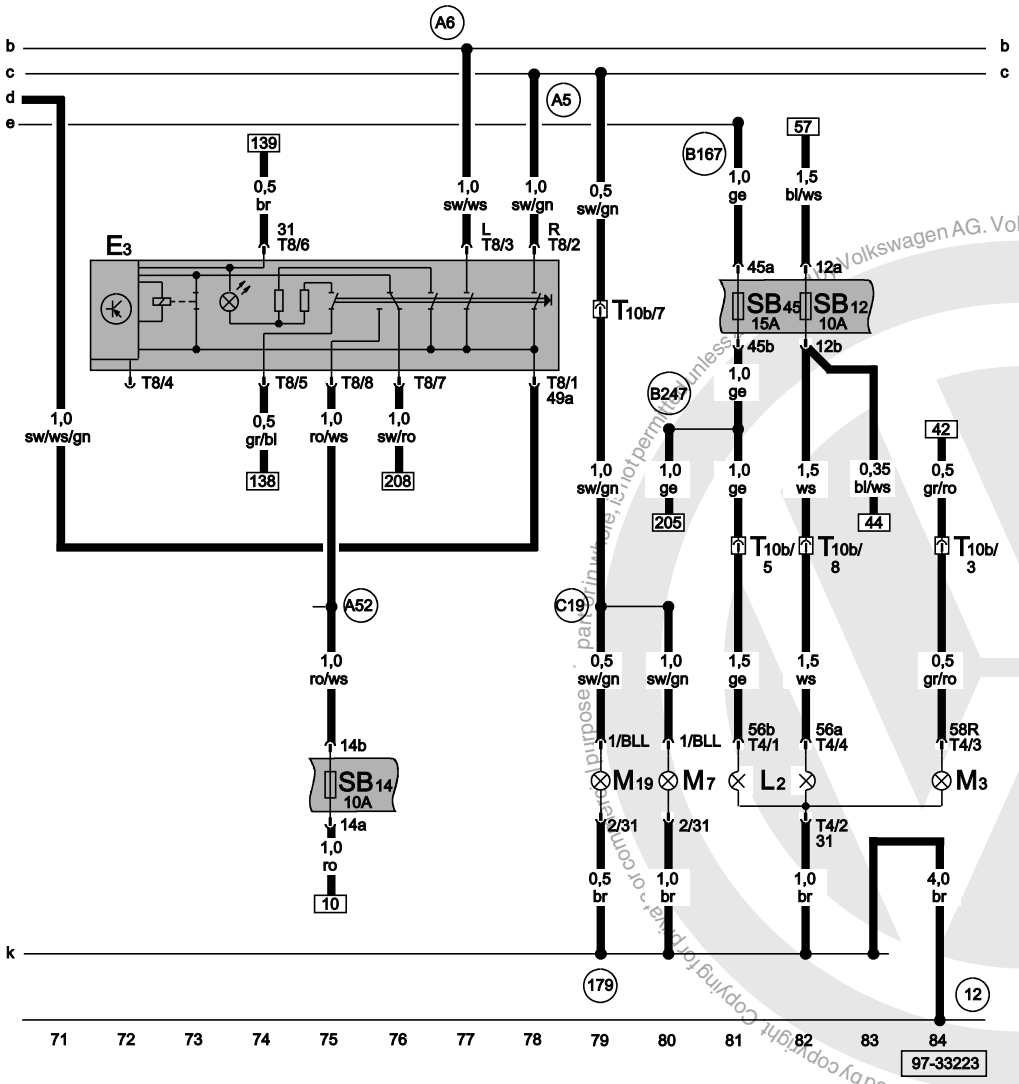

ws = white
sw = black
ro = red
br = brown
gn = green
bl = blue
gr = grey
li = purple
ge = yellow
or = orange
rs = pink

Fuses, hazard warning light switch, headlight right, turn signal front right

E3	Hazard warning light switch
L2	Twin filament bulb for headlight, right
M3	Side light bulb, right
M7	Turn signal bulb, front right
M19	Side turn signal bulb, right
SB12	Fuse -12- on fuse box
SB14	Fuse -14- on fuse box
SB45	Fuse -45- on fuse box
T4	4-pin connector, in headlight, right
T8	8-pin connector
T10b	10-pin connector, white, coupling station under relay carrier, left
12	Earth point, left in engine compartment
179	Earth connection, in left headlight wiring harness
A5	Positive (+) connection (right turn signal), in dash panel wiring harness
A6	Positive (+) connection (left turn signal), in dash panel wiring harness
A52	Positive (+) connection -2- (30), in dash panel wiring harness
B167	Connection (56b), in interior wiring harness
B247	Connection -2- (56b), in interior wiring harness
C19	Connection -1- (turn signal, right), in headlight wiring harness

Protected by copyright. Copyright by Volkswagen AG. Volkswagen AG does not guarantee or assume any liability with respect to the correctness of information in this document. Copyright by Volkswagen AG. For personal use only, but not permitted for commercial purposes, or commercial purposes, or commercial purposes.

satelettronica

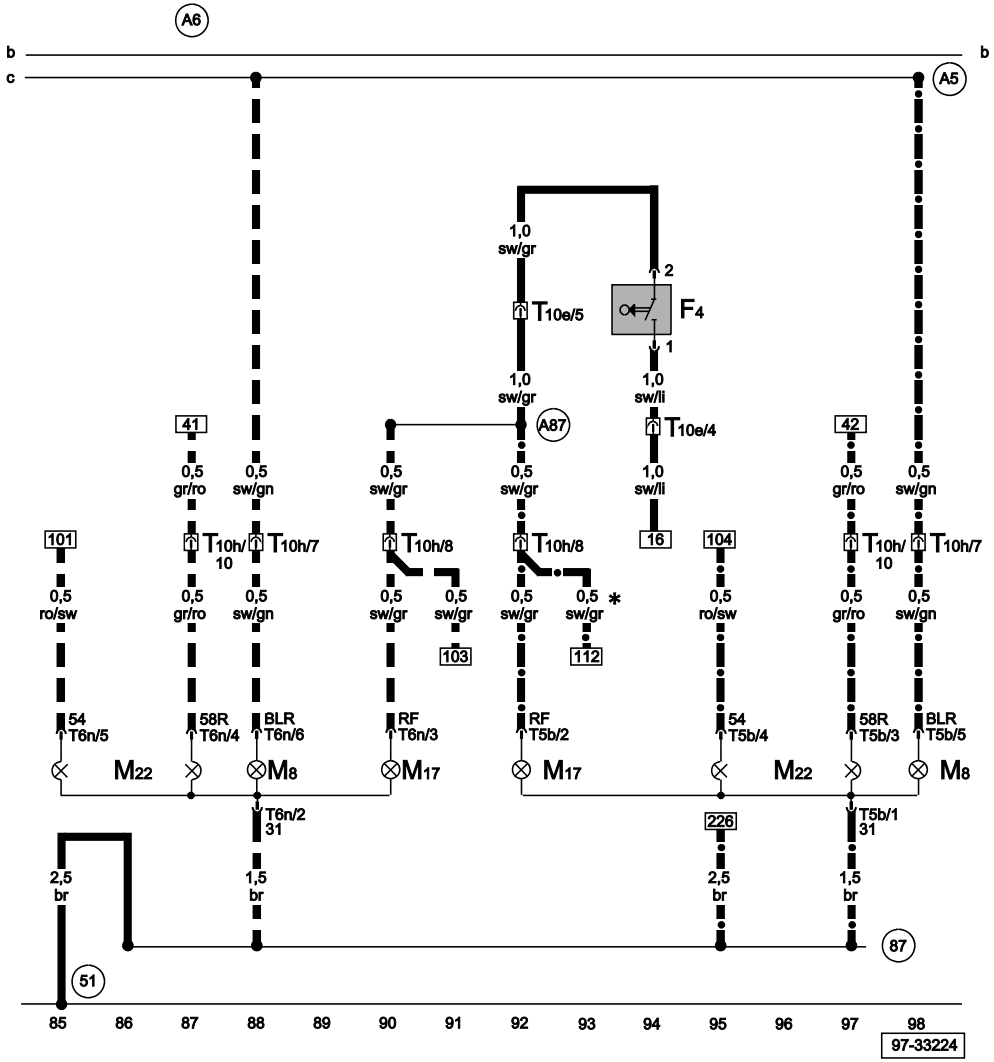

Reversing light switch, brake and tail light bulb, right

F4	Reversing light switch
M8	Turn signal bulb, rear right
M17	Reversing light bulb, right
M22	Brake and tail light bulb, right
T5b	5-pin connector, on right tail light
T6n	6-pin connector, on right tail light
T10e	10-pin connector, green, coupling station under relay carrier, left
T10h	10-pin connector, light green, coupling station under relay carrier, left
51	Earth point, right luggage compartment
87	Earth connection -2-, in rear wiring harness
A5	Positive (+) connection (right turn signal), in dash panel wiring harness
A6	Positive (+) connection (left turn signal), in dash panel wiring harness
A87	Connection (reversing light), in dash panel wiring harness
*	Only models without rear fog light
<fo:external-graphic src="/../PDOC/samba/tools/png-convert/out//slp/ft_icons/m_m_m.png" content-width="20pt" scaling="uniform"/>	Only Polo Variant
<fo:external-graphic src="/../PDOC/samba/tools/	Only Polo Classic

ws = white

satelettronica
Protected by copyright. Copying for private or commercial purposes, in part or in whole, is not permitted unless authorised by Volkswagen AG. Volkswagen AG does not guarantee or accept any liability with respect to the correctness of information in this document. Copyright by Volkswagen AG.

sw	=	black	
ro	=	red	
br	=	brown	
gn	=	green	
bl	=	blue	
gr	=	grey	
li	=	purple	
ge	=	yellow	
or	=	orange	
rs	=	pink	

png-
convert/
out//slp/
ft_icons/
m_k_m.p
ng"
content-
width="2
0pt"
scaling="
uniform"/
>

Protected by copyright. Copying for private or commercial purposes, in part or in whole, is not permitted unless authorised by Volkswagen AG. Volkswagen AG does not guarantee or accept any liability with respect to the correctness of information in this document. Copyright by Volkswagen AG.

satelettronica

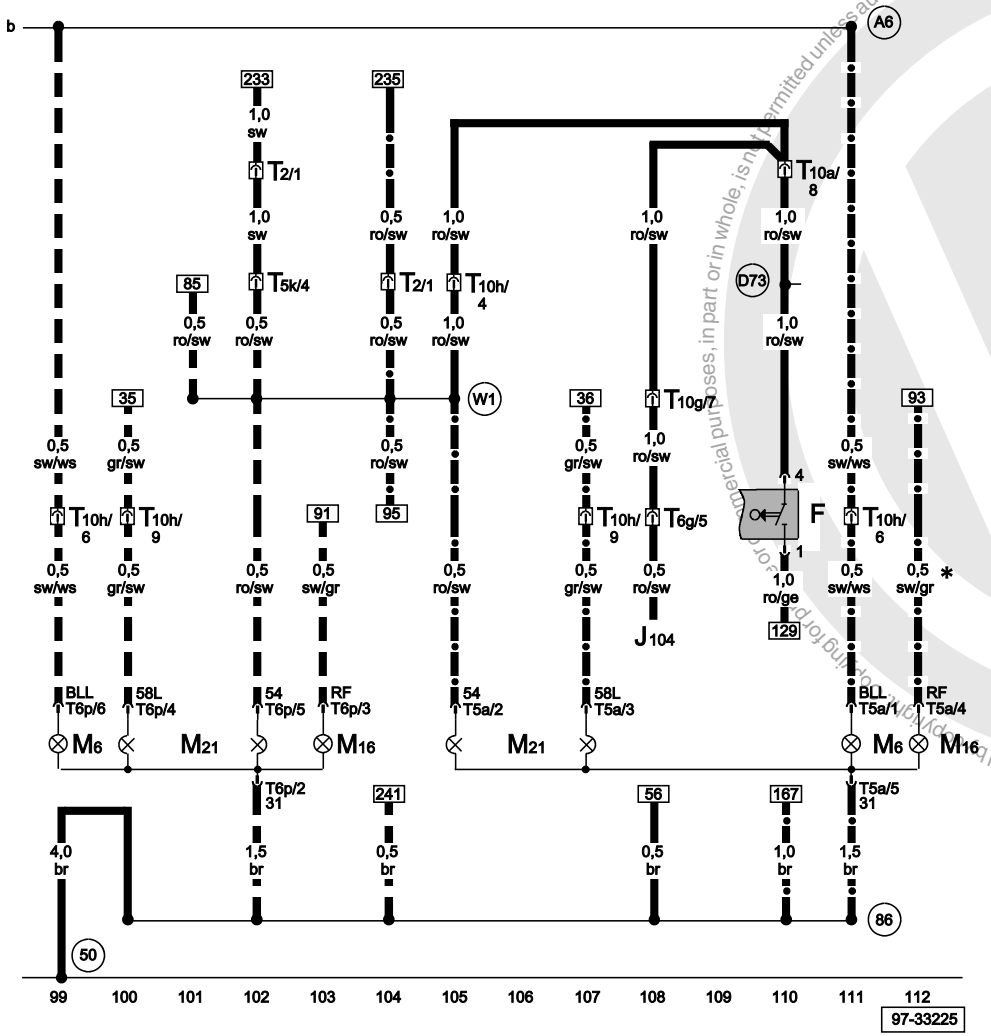

Brake light switch, brake and tail light bulb, left

F	Brake light switch
J104	ABS with EDL control unit
M6	Turn signal bulb, rear left
M16	Reversing light bulb, left
M21	Brake and tail light bulb, left
T2	2-pin connector
T5a	5-pin connector, on left tail light
T5k	5-pin connector, on right C-pillar
T6g	6-pin connector, black, coupling station under relay carrier, left
T6p	6-pin connector, on left tail light
T10a	10-pin connector, black, coupling station under relay carrier, left
T10g	10-pin connector, red, coupling station under relay carrier, left
T10h	10-pin connector, light green, coupling station under relay carrier, left
50	Earth point, on left luggage compartment
86	Earth connection -1-, in rear wiring harness
A6	Positive (+) connection (left turn signal), in dash panel wiring harness
D73	Positive (+) connection (54), in engine compartment wiring harness
W1	Positive (+) connection -1- (54), in rear wiring harness
*	Only models without rear fog light
<fo:external-graphic src="/../PDOC/samba/tools/png-convert/out//slp/ft_icons/m_m_m.png" content-width="20pt" scaling="uniform"/>	Only Polo Variant

ws = white

Protected by copyright. Copying for private or commercial purposes, in part or in whole, is not permitted unless authorised by Volkswagen AG. Volkswagen AG does not guarantee or accept any liability with respect to the correctness of information in this document. Copyright by Volkswagen AG.

satelettronica

sw	=	black
ro	=	red
br	=	brown
gn	=	green
bl	=	blue
gr	=	grey
li	=	purple
ge	=	yellow
or	=	orange
rs	=	pink


```
<fo:external-graphic
src="/../PDOC/samba/tools/png-convert/out//slp/ft_icons/m_k_m.png"
content-width="20pt"
scaling="uniform"/>
```


Only Polo Classic

Protected by copyright. Copying for private or commercial purposes, in part or in whole, is not permitted unless authorised by Volkswagen AG. Volkswagen AG does not guarantee or accept any liability with respect to the correctness of information in this document. Copyright by Volkswagen AG.
satelettronica

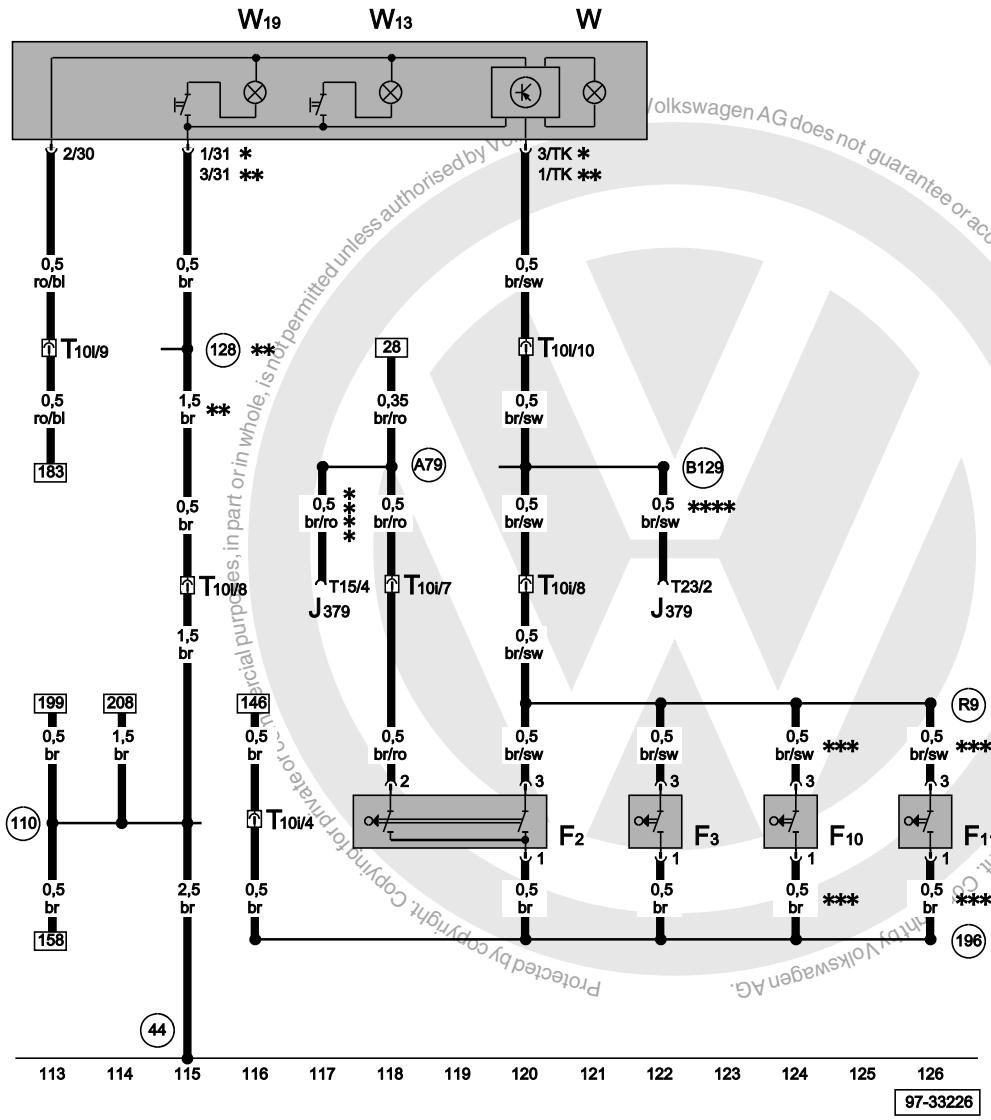

Interior light, door contact switch

F2	Door contact switch, driver's side
F3	Door contact switch, front passenger's side
F10	Rear left door contact switch
F11	Rear right door contact switch
J379	Central locking and anti-theft alarm system control unit
T10i	10-pin connector, orange, coupling station under relay carrier, left
T10l	10-pin connector, on part of left A-pillar
T15	15-pin connector
T23	23-pin connector
W	front interior light
W13	Front passenger reading light
W19	Reading light, driver's side
44	Earth point, lower part of left A-pillar
110	Earth connection -2-, in instruments wiring harness
128	Earth connection -1-, in interior light wiring harness
196	Earth connection -3-, in rear wiring harness
A79	Connection (hot light switch), in dash panel wiring harness
B129	Connection (interior light, 311), in interior wiring harness
R9	Connection (door contact switch), in rear wiring harness
*	Only models with reading light
**	Only models with sliding sunroof
***	Only 4-door models
****	Only models with radio-operated remote control

ws	=	white
sw	=	black
ro	=	red
br	=	brown
gn	=	green
bl	=	blue
gr	=	grey
li	=	purple
ge	=	yellow
or	=	orange
rs	=	pink

Volkswagen AG does not guarantee or accept any liability with respect to the correctness of information in this document. Copyright by Volkswagen AG. Protected by copyright. Copying for private or commercial purposes, in part or in whole, is not permitted unless authorised by Volkswagen AG.

satelettronica

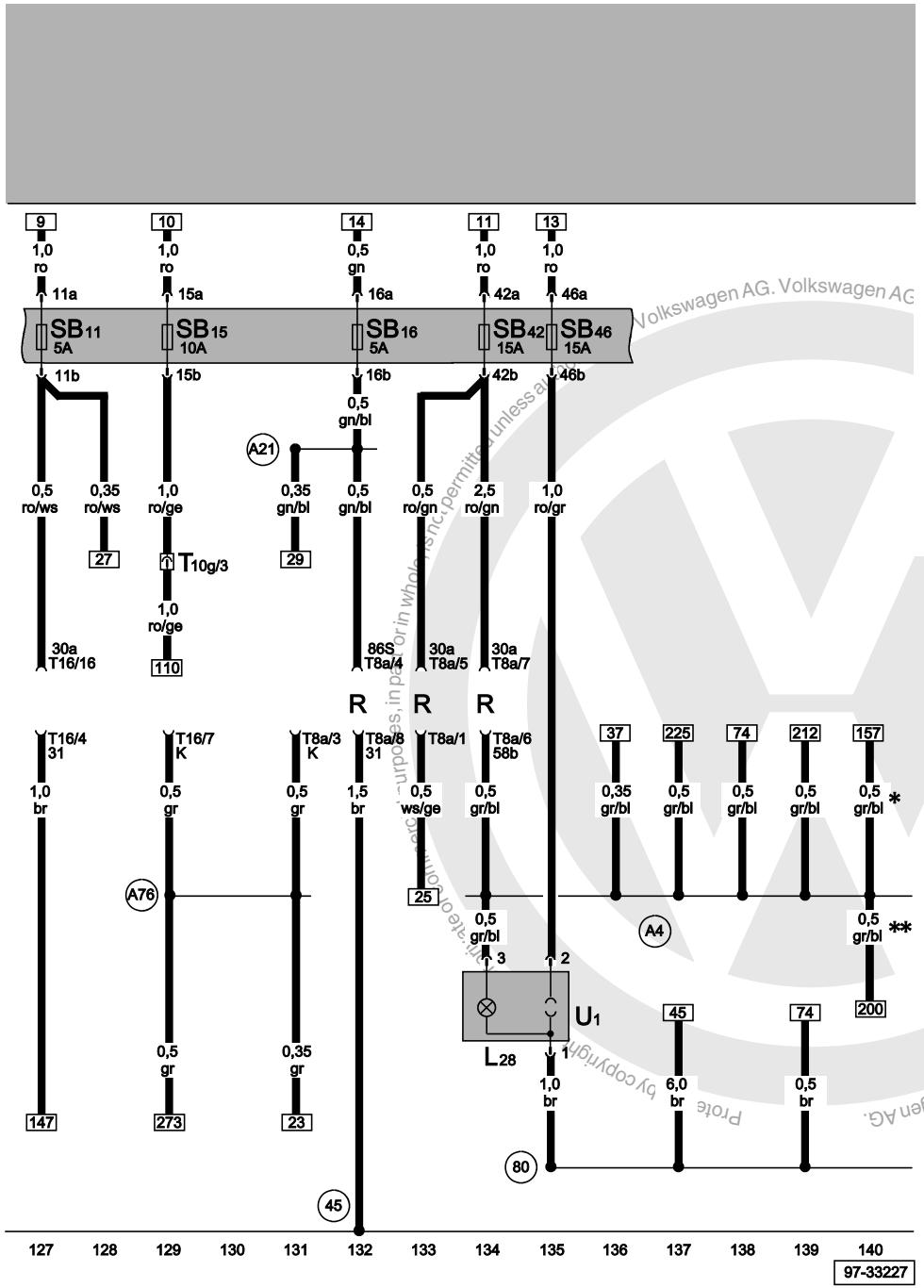

Fuses, cigarette lighter, connection for radio, diagnostic connector

L28	Cigarette lighter light bulb
R	Radio
SB11	Fuse -11- on fuse box
SB15	Fuse -15- on fuse box
SB16	Fuse -16- on fuse box
SB42	Fuse -42- on fuse box
SB46	Fuse -46- on fuse box
T8a	8-pin connector
T10g	10-pin connector, red, coupling station under relay carrier, left
T16	16-pin connector, diagnostic connector
U1	Cigarette lighter
45	Earth point, behind dash panel - centre
80	Earth connection -1-, in dash panel wiring harness
A4	Positive (+) connection (58b), in dash panel wiring harness
A21	Connection (86s), in dash panel wiring harness
A76	Connection (diagnosis wire K), in dash panel wiring harness
*	Only models without headlight range control
**	Only models with headlight range control

ws	=	white
sw	=	black
ro	=	red
br	=	brown
gn	=	green
bl	=	blue
gr	=	grey
li	=	purple
ge	=	yellow
or	=	orange
rs	=	pink

satelettronica

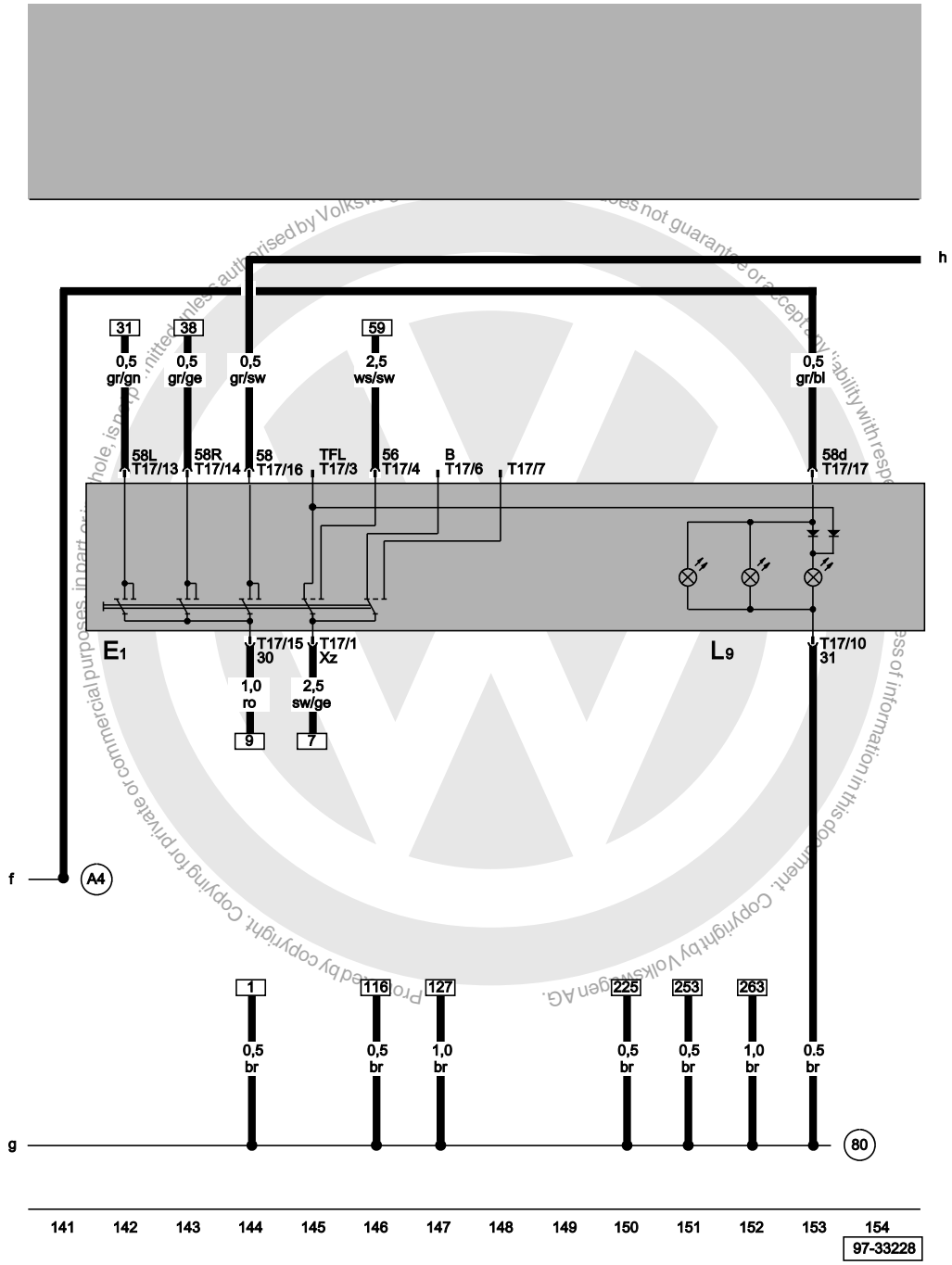

Light switch

E1	Light switch
L9	Light switch light bulb
T17	17-pin connector, on light switch
80	Earth connection -1-, in dash panel wiring harness
A4	Positive (+) connection (58b), in dash panel wiring harness

ws	=	white
sw	=	black
ro	=	red
br	=	brown
gn	=	green
bl	=	blue
gr	=	grey
li	=	purple
ge	=	yellow
or	=	orange
rs	=	pink

satelettronica

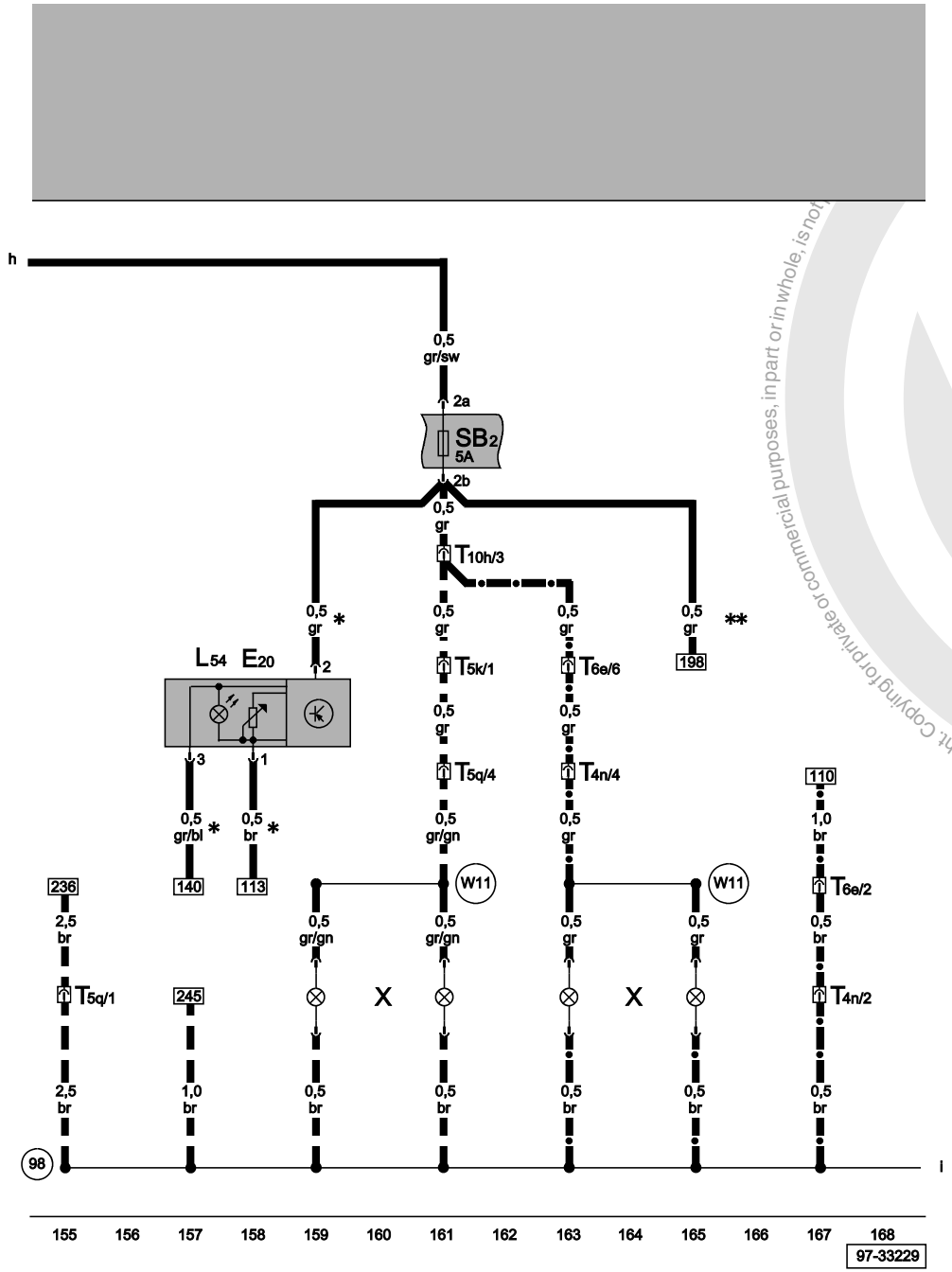

Number plate light, illumination regulator

E20	Switches and instruments light regulator
L54	Headlight range control adjuster light bulb
SB2	Fuse -2- on fuse box
T4n	4-pin connector, in tailgate/boot lid
T5k	5-pin connector, on right C-pillar
T5q	5-pin connector, in tailgate/boot lid
T6e	6-pin connector, on left C-pillar
T10h	10-pin connector, light green, coupling station under relay carrier, left
X	Number plate light
98	Earth connection, in tailgate/boot lid wiring harness
W11	Connection (58), in tailgate/boot lid wiring harness
*	Only models without headlight range control
**	Only models with headlight range control

<fo:external-graphic src="/../PDOC/samba/tools/png-convert/out//slp/ft_icons/m_m_m.png" content-width="20pt" scaling="uniform"/>
Only Polo Variant

<fo:external-graphic src="/../PDOC/samba/tools/png-convert/out//slp/ft_icons/m_k_m.png" content-
Only Polo Classic

ws = white

Protected by copyright. Copying for private or commercial purposes, in part or in whole, is not permitted by Volkswagen AG. Volkswagen AG does not guarantee or accept any liability with respect to the correctness of information in this document. Copyright by Volkswagen AG.

satelettronica

sw	=	black	width="2
ro	=	red	0pt"
br	=	brown	scaling="
gn	=	green	uniform"/
bl	=	blue	>
gr	=	grey	
li	=	purple	
ge	=	yellow	
or	=	orange	
rs	=	pink	

Protected by copyright. Copying for private or commercial purposes, in part or in whole, is not permitted unless authorised by Volkswagen AG. Volkswagen AG does not guarantee or accept any liability with respect to the correctness of information in this document. Copyright by Volkswagen AG.

satelettronica

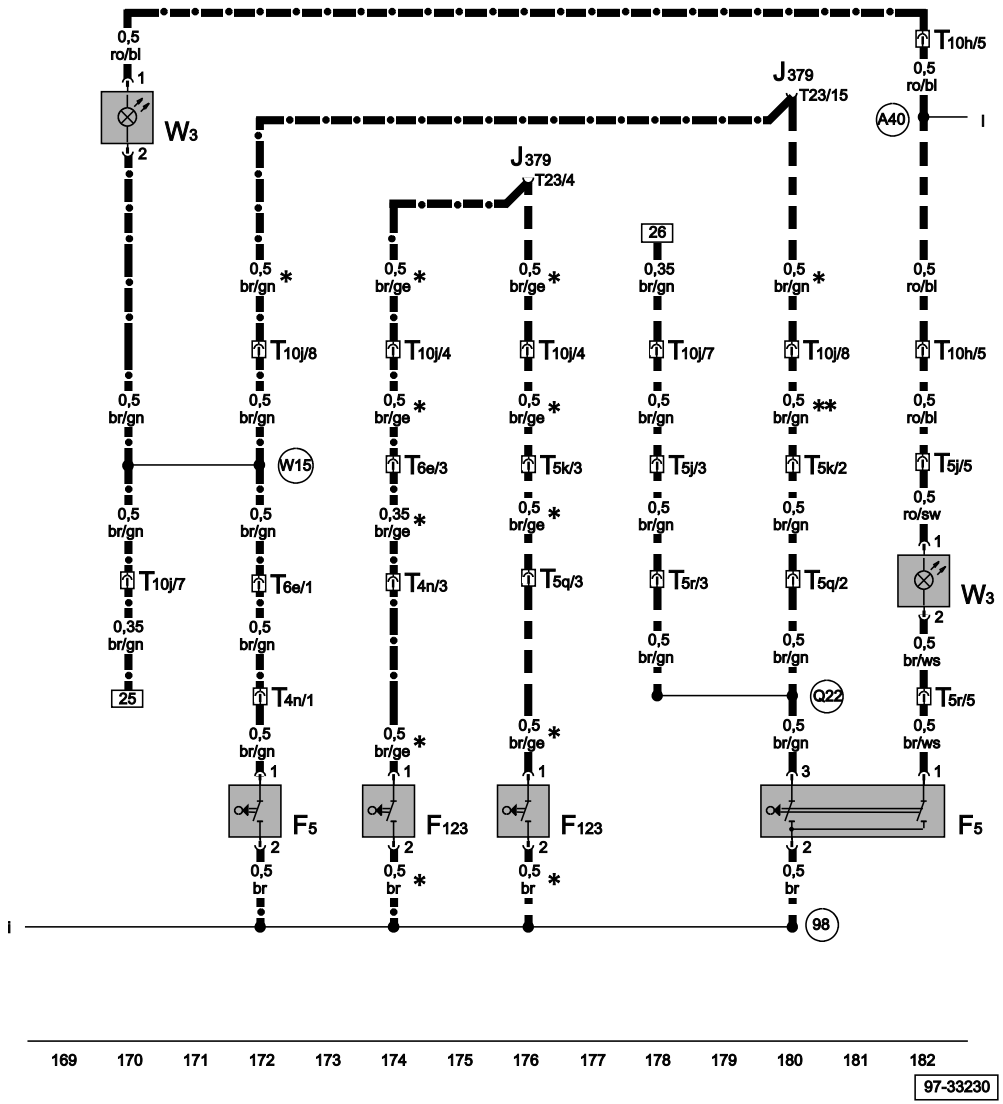

Luggage compartment light, tailgate/boot lid contact switch for anti-theft alarm

F5	Luggage compartment light switch
F123	Tailgate/boot lid contact switch for anti-theft alarm
J379	Central locking and anti-theft alarm system control unit
T4n	4-pin connector, in tailgate/boot lid
T5j	5-pin connector, on left C-pillar
T5k	5-pin connector, on right C-pillar
T5q	5-pin connector, in tailgate/boot lid
T5r	5-pin connector, in tailgate/boot lid
T6e	6-pin connector, on left C-pillar
T10h	10-pin connector, light green, coupling station under relay carrier, left
T10j	10-pin connector, grey, coupling station under relay carrier, left
T23	23-pin connector
W3	Luggage compartment light
98	Earth connection, in tailgate/boot lid wiring harness
A40	Positive (+) connection -1- (30), in dash panel wiring harness
Q22	Connection -1-, in tailgate/boot lid wiring harness
W15	Connection -1- (luggage compartment light), in rear wiring harness
*	Only models with anti-theft alarm
**	Only models with electric window lifter
<fo:external-graphic src="/../PDOC/samba/tools/png-convert/out//slp/ft_icons/m_m_m.png" content-width="20pt" scaling="uniform"/>	Only Polo Variant
<fo:external-graphic	Only Polo Classic

ws = white

Protected by copyright. Copying for private or commercial purposes, in part or in whole, is not permitted unless authorised by Volkswagen AG. Volkswagen AG does not guarantee or accept any liability with respect to the correctness of information in this document. Copyright by Volkswagen AG.
satelettronica

Protected by copyright. Copying for private or commercial purposes, in part or in whole, is not permitted unless authorised by Volkswagen AG. Volkswagen AG does not guarantee or accept any liability with respect to the correctness of information in this document. Copyright by Volkswagen AG.

sw	=	black
ro	=	red
br	=	brown
gn	=	green
bl	=	blue
gr	=	grey
li	=	purple
ge	=	yellow
or	=	orange
rs	=	pink

src="/../PDOC/samba/tools/png-convert/out//slp/ft_icons/m_k_m.png" content-width="20pt" scaling="uniform"/>

satelettronica

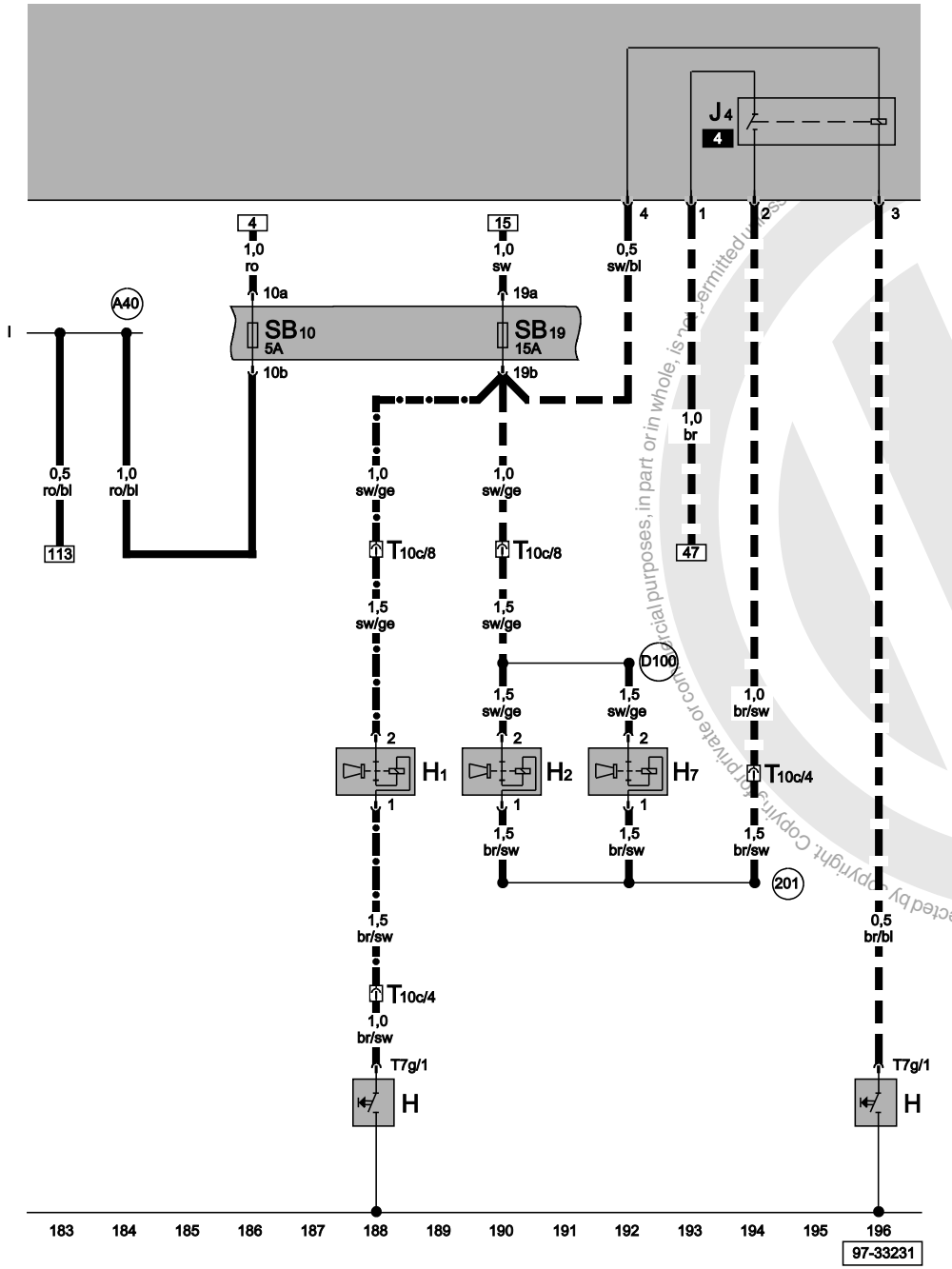

Fuses, horn plate

H	Horn plate
H1	Horn/dual tone horn
H2	High tone horn
H7	Low tone horn
J4	Dual tone horn relay
SB10	Fuse -10- on fuse box
SB19	Fuse -19- on fuse box
T7g	7-pin connector
T10c	10-pin connector, brown, coupling station under relay carrier, left
201	Earth connection -5-, in engine compartment wiring harness
A40	Positive (+) connection -1- (30), in dash panel wiring harness
D100	Positive (+) connection -2- (15), in engine compartment wiring harness

<fo:external-graphic src="/../PDOC/samba/tools/png-convert/out//slp/ft_icons/m_m_m.png" content-width="20pt" scaling="uniform"/> Only models with dual tone horn

<fo:external-graphic src="/../PDOC/samba/tools/png-convert/out//slp/ft_icons/m_k_m.png" Only models without dual tone horn

ws = white

AG. Volkswagen AG does not guarantee or assume any liability with respect to the correctness of information in this document. Copyright by Volkswagen AG. Protected by copyright. Copying for private or commercial purposes, in part or in whole, is not permitted unless

satelettronica

sw	=	black	content-
ro	=	red	width="2
br	=	brown	0pt"
gn	=	green	scaling="
bl	=	blue	uniform"/
gr	=	grey	>
li	=	purple	
ge	=	yellow	
or	=	orange	
rs	=	pink	

Protected by copyright. Copying for private or commercial purposes, in part or in whole, is not permitted unless authorised by Volkswagen AG. Volkswagen AG does not guarantee or accept any liability with respect to the correctness of information in this document. Copyright by Volkswagen AG.

satelettronica

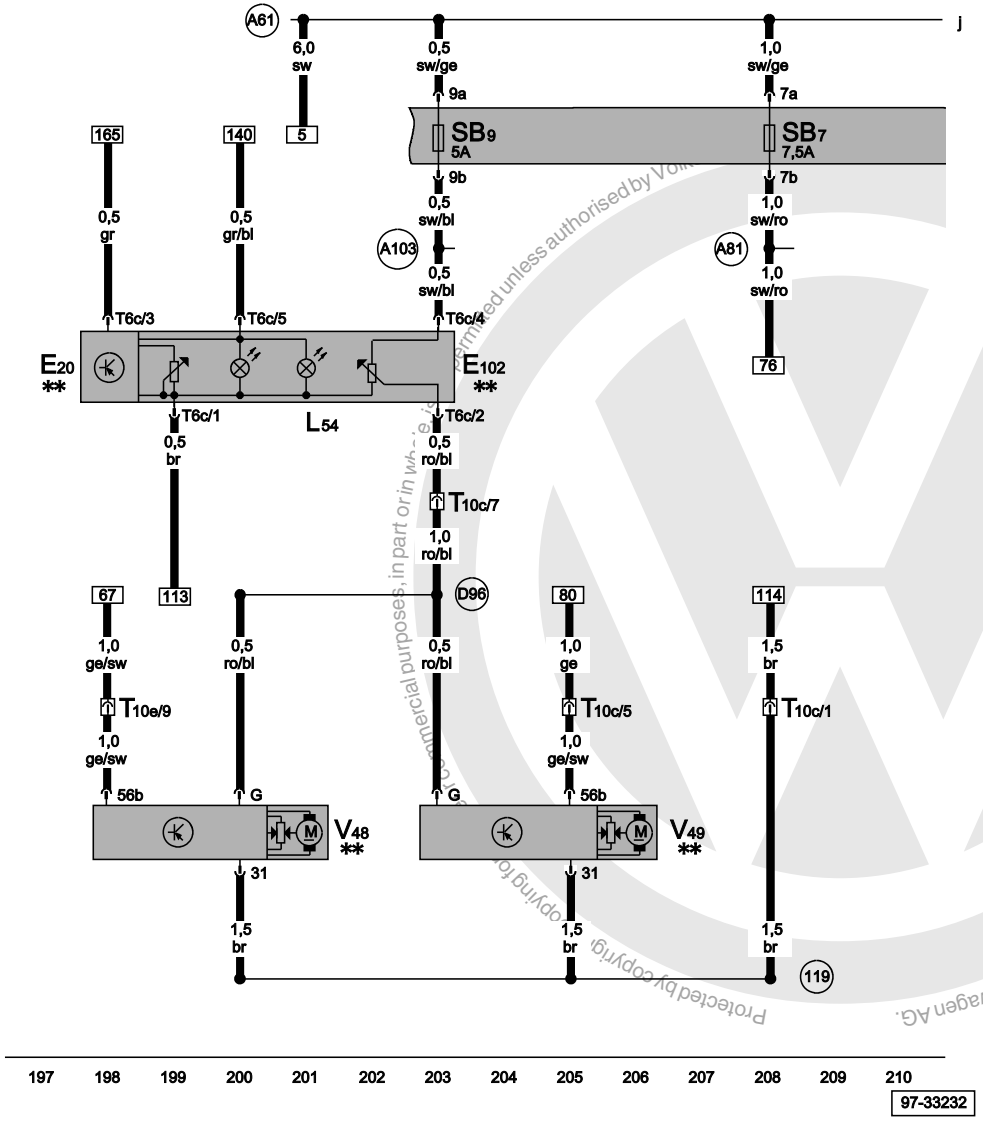

Fuses, headlight range control, illumination regulator

E20	Switches and instruments light regulator
E102	Headlight range control adjuster
L54	Headlight range control adjuster light bulb
SB7	Fuse -7- on fuse box
SB9	Fuse -9- on fuse box
T6c	6-pin connector
T10c	10-pin connector, brown, coupling station under relay carrier, left
T10e	10-pin connector, green, coupling station under relay carrier, left
V48	Headlight range control motor, left
V49	Headlight range control motor, right
119	Earth connection -1-, in headlight wiring harness
A61	Positive (+) connection (X), in dash panel wiring harness
A81	Connection -2- (X), in dash panel wiring harness
A103	Connection -2- (56), in dash panel wiring harness
D96	Connection (Headlight range control), in engine compartment wiring harness
**	Only models with headlight range control

ws	=	white
sw	=	black
ro	=	red
br	=	brown
gn	=	green
bl	=	blue
gr	=	grey
li	=	purple
ge	=	yellow
or	=	orange
rs	=	pink

Protected by copyright. Copying for commercial purposes, in part or in whole, is not permitted unless authorised by Volkswagen AG. Volkswagen AG does not guarantee or accept any liability with respect to the correctness of information in this document. Copyright by Volkswagen AG.

satelettronica

Fuses, fresh air blower, fresh air/air recirculating flap

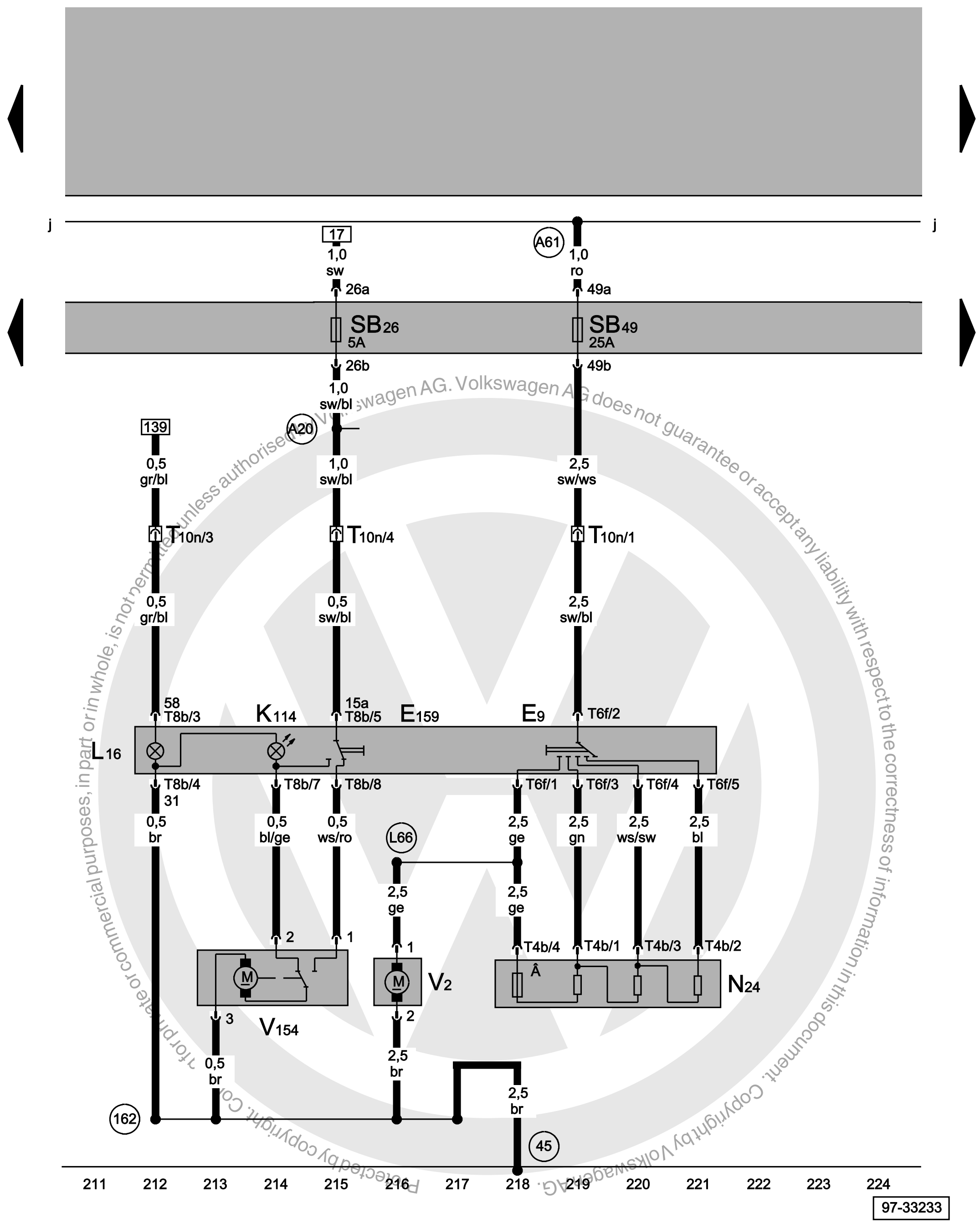

E9	Fresh air blower switch	
E159	Fresh air/air recirculating flap switch	
K114	Fresh air/air recirculation warning lamp	
L16	Fresh air control light bulb	
N24	Fresh air blower with overheating fuse series resistor	
SB26	Fuse -26- on fuse box	
SB49	Fuse -49- on fuse box	
T4b	4-pin connector, on fresh air blower	
T6f	6-pin connector, on fresh air blower switch	
T8b	8-pin connector, on fresh air blower switch	
T10n	10-pin connector, behind dash panel, centre	
V2	Fresh air blower	
V154	Fresh air/recirculated air flap control motor	
45	Earth point, behind dash panel - centre	
162	Earth connection, in blower motor wiring harness	
A20	Positive (+) connection (15a), in dash panel wiring harness	
A61	Positive (+) connection (X), in dash panel wiring harness	
L66	Connection, in heater blower wiring harness	

ws	=	white
sw	=	black
ro	=	red
br	=	brown
gn	=	green
bl	=	blue
gr	=	grey
li	=	purple
ge	=	yellow
or	=	orange
rs	=	pink

satelettronica
Protected by copyright. Copying for private or commercial purposes, in part or in whole, is not permitted unless authorised by Volkswagen AG. Volkswagen AG does not guarantee or accept any liability with respect to the correctness of information in this document. Copyright by Volkswagen AG.

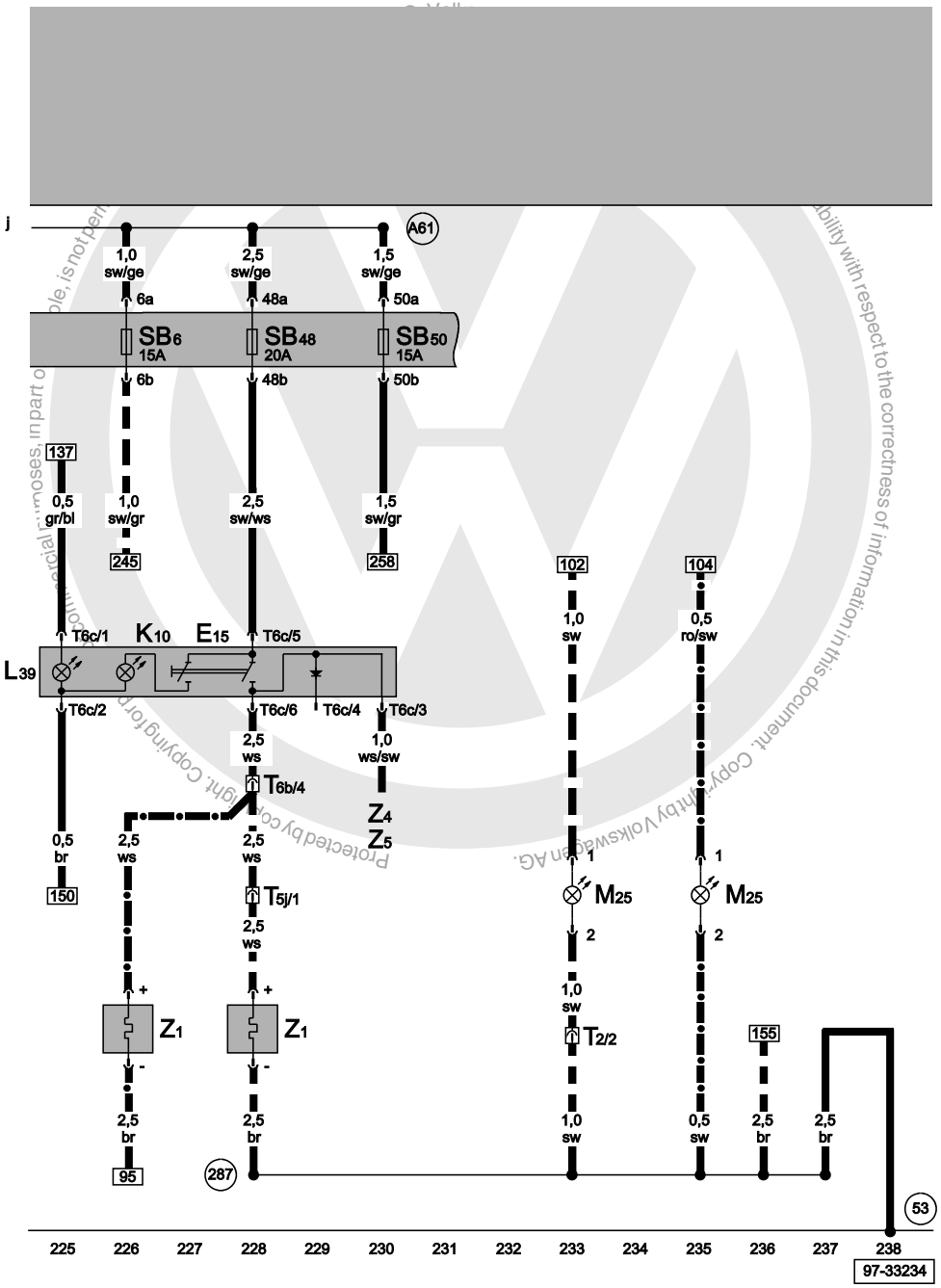

Fuses, heated rear window switch, high level brake light bulb

E15	Heated rear window switch
K10	Heated rear window warning lamp
L39	Heated rear window switch bulb
M25	High level brake light bulb
SB6	Fuse -6- on fuse box
SB48	Fuse -48- on fuse box
SB50	Fuse -50- on fuse box
T2	2-pin connector
T5j	5-pin connector, on left C-pillar
T6b	6-pin connector, grey, coupling station under relay carrier, left
T6c	6-pin connector
Z1	Heated rear window
Z4	Heated exterior mirror, driver's side
Z5	Heated exterior mirror, front passenger's side
53	Earth point, in tailgate/boot lid, right
287	Earth connection, in rear lid prewiring wiring harness
A61	Positive (+) connection (X), in dash panel wiring harness

<fo:external-graphic src="/../PDOC/samba/tools/png-convert/out//slp/ft_icons/m_m_m.png" content-width="20pt" scaling="uniform"/>

Only Polo Variant

<fo:external-graphic src="/../PDOC/samba/tools/png-

Only Polo Classic

ws = white

satelettronica

			convert/
sw	=	black	out//slp/
ro	=	red	ft_icons/
br	=	brown	m_k_m.p
gn	=	green	ng"
bl	=	blue	content-
gr	=	grey	width="2
li	=	purple	0pt"
ge	=	yellow	scaling="
or	=	orange	uniform"/
rs	=	pink	>

Protected by copyright. Copying for private or commercial purposes, in part or in whole, is not permitted unless authorised by Volkswagen AG. Volkswagen AG does not guarantee or accept any liability with respect to the correctness of information in this document. Copyright by Volkswagen AG.
satelettronica

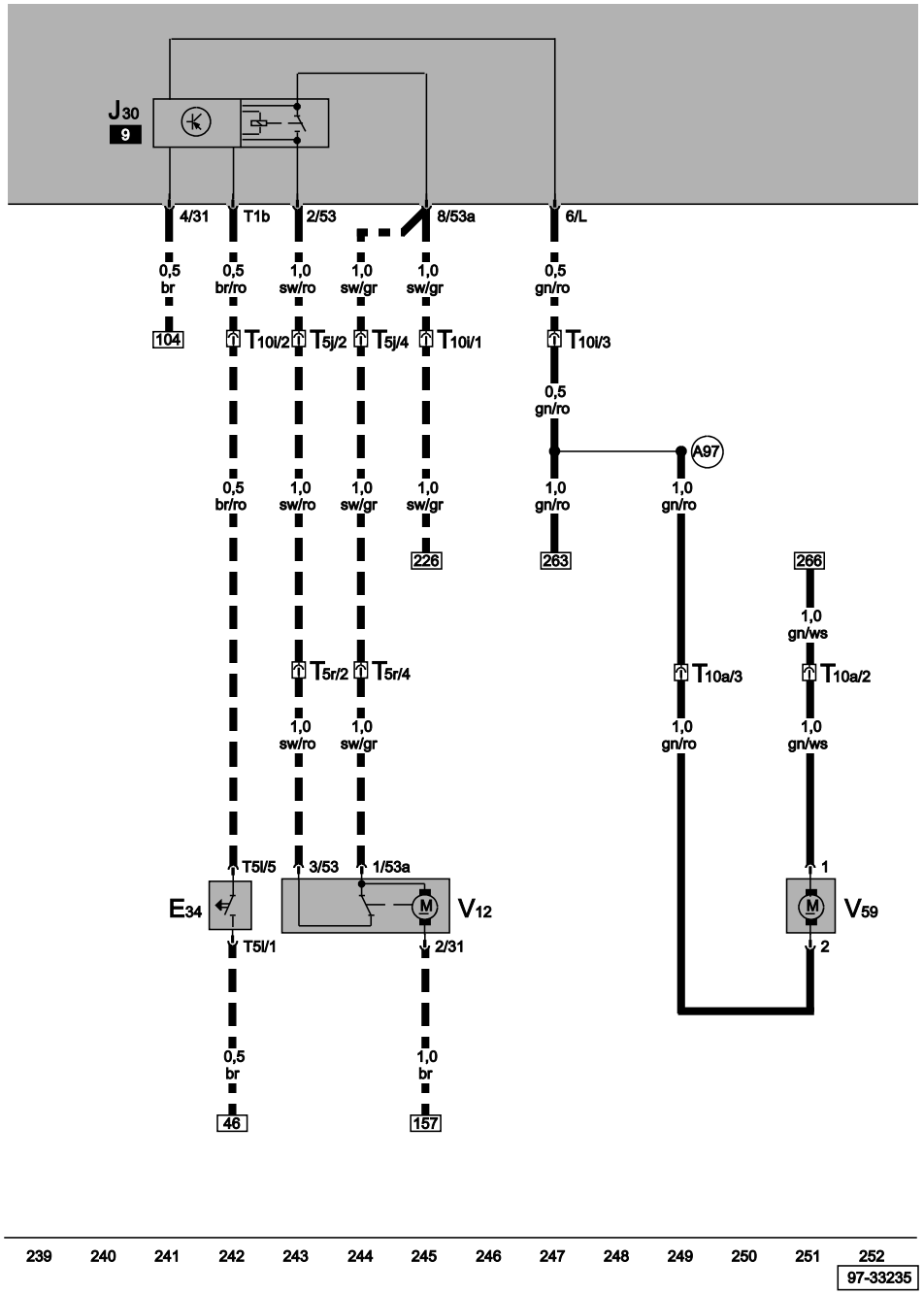

Windscreen and rear window washer pump, rear window wiper motor

E34	Rear wiper switch
T5j	5-pin connector, on left C-pillar
T5l	5-pin connector, black, under steering wheel
T5r	5-pin connector, in tailgate/boot lid
T10a	10-pin connector, black, coupling station under relay carrier, left
T10i	10-pin connector, orange, coupling station under relay carrier, left
J30	Rear window wiper/washer relay
V12	Rear window wiper motor
V59	Windscreen and rear window washer pump
A97	Connection (53), in dash panel wiring harness

<fo:external-graphic src="/../PDOC/samba/tools/png-convert/out//slp/ft_icons/m_m_m.png" content-width="20pt" scaling="uniform"/>

Only Polo Variant

ws	=	white
sw	=	black
ro	=	red
br	=	brown
gn	=	green
bl	=	blue
gr	=	grey
li	=	purple
ge	=	yellow
or	=	orange
rs	=	pink

Protected by copyright. Copying for private or commercial purposes, in part or in whole, is not permitted unless authorised by Volkswagen AG. Volkswagen AG does not guarantee or accept any liability with respect to the correctness of information in this document. Copyright by Volkswagen AG.

satelettronica

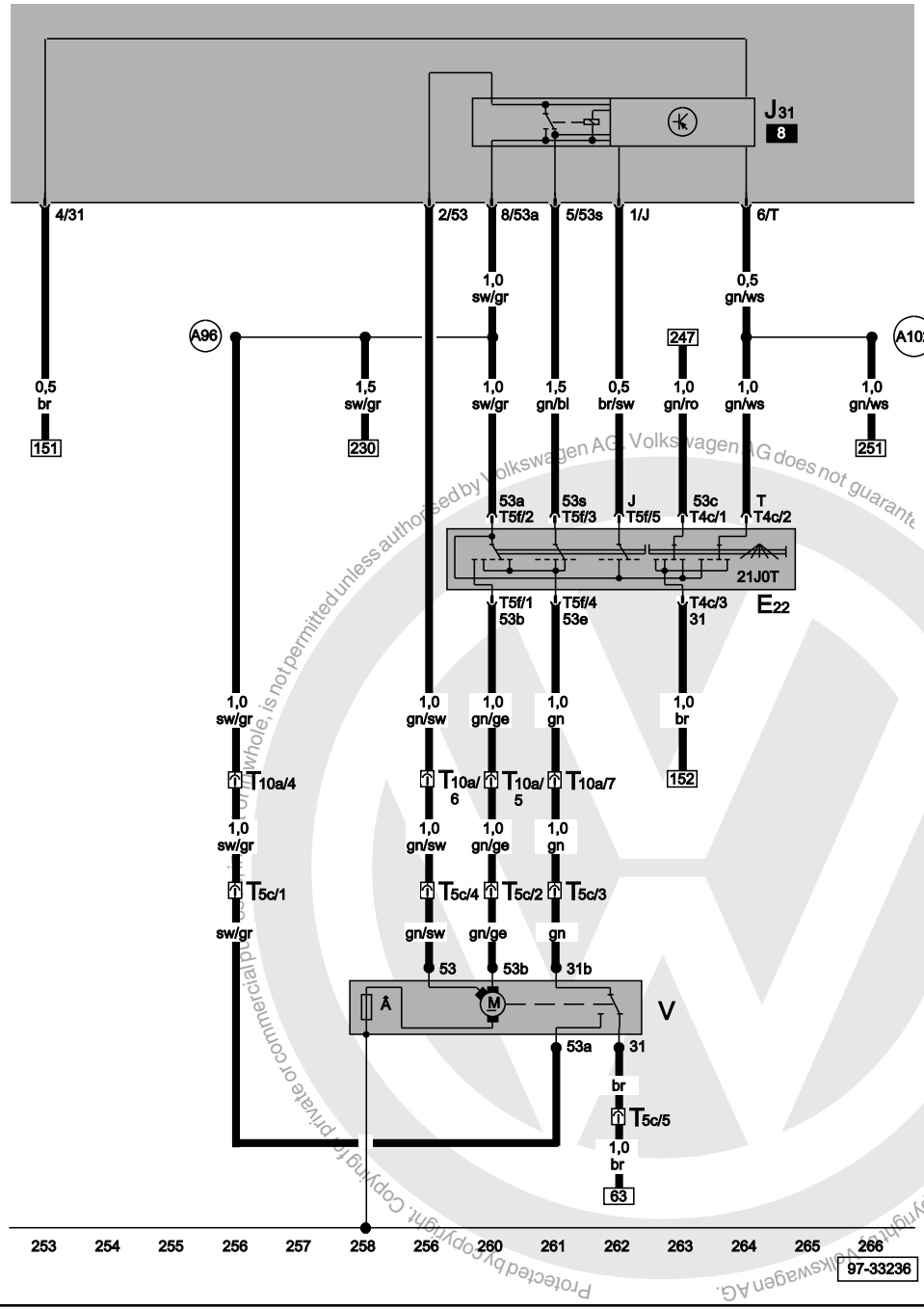

Windscreen wiper motor

E22	Intermittent wiper switch
J31	Automatic intermittent wash/wipe relay
T4c	4-pin connector
T5c	5-pin connector, on windscreen wiper motor
T5f	5-pin connector
T10a	10-pin connector, black, coupling station under relay carrier, left
V	Windscreen wiper motor
A96	Connection (53a), in dash panel wiring harness
A102	Connection (windscreen wiper), in dash panel wiring harness

ws	=	white
sw	=	black
ro	=	red
br	=	brown
gn	=	green
bl	=	blue
gr	=	grey
li	=	purple
ge	=	yellow
or	=	orange
rs	=	pink

Protected by copyright. Copying for private or commercial purposes, in whole, is not permitted unless authorised by Volkswagen AG. Volkswagen AG does not guarantee or accept any liability with respect to the correctness of information in this document. Copyright by Volkswagen AG.

satelettronica

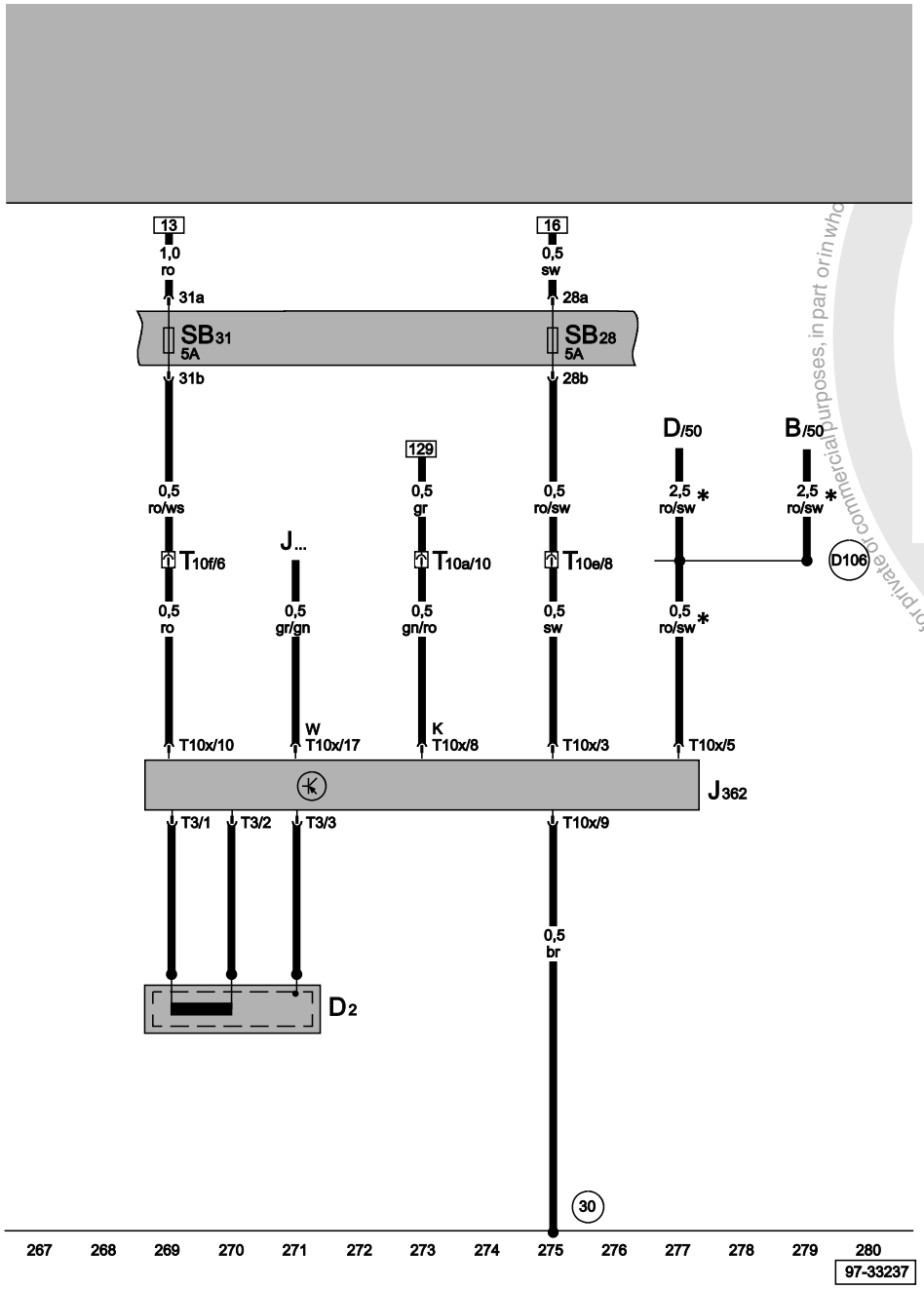

Fuses, immobilizer control unit

B	Starter
D	Ignition/starter switch
D2	Immobilizer reading coil
J...	Engine control units
J362	Immobilizer control unit
SB28	Fuse -28- on fuse box
SB31	Fuse -31- on fuse box
T3	3-pin connector
T10a	10-pin connector, black, coupling station under relay carrier, left
T10e	10-pin connector, green, coupling station under relay carrier, left
T10f	10-pin connector, purple, coupling station under relay carrier, left
T10x	10-pin connector, on immobilizer control unit
(30)	Earth point -1-, next to relay plate
(D106)	Connection -4-, in engine compartment wiring harness
*	Discontinued (phased-in modification)

ws	=	white
sw	=	black
ro	=	red
br	=	brown
gn	=	green
bl	=	blue
gr	=	grey
li = purple
ge = yellow
or = orange
rs = pink

Protected by copyright. Copying for private or commercial purposes, in part or in whole, is not authorised by Volkswagen AG. Volkswagen AG does not guarantee or accept any liability with respect to the correctness of information in this document. Copyright by Volkswagen AG.

satelettronica

Central locking, remote control and anti-theft alarm system aerial

From May 2001

For alternatives to relay and fuse positions as well as multi-pin connector wiring - see "Fitting locations" section.

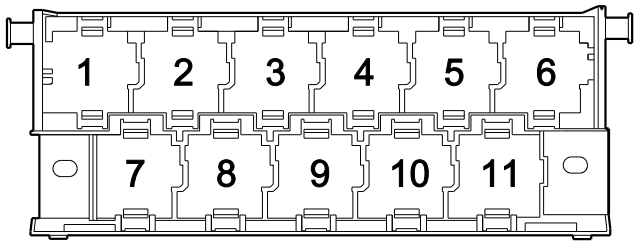

97-22850

Fuse colours

30 A - green
25 A - white
20 A - yellow
15 A - blue
10 A - red
7.5 A - brown
5 A - beige
3 A - purple

Protected by copyright. Copying for private or commercial purposes, in part or in whole, is not permitted unless authorised by Volkswagen AG. Volkswagen AG does not guarantee or accept any liability with respect to the correctness of information in this document. Copyright by Volkswagen AG.

satelettronica

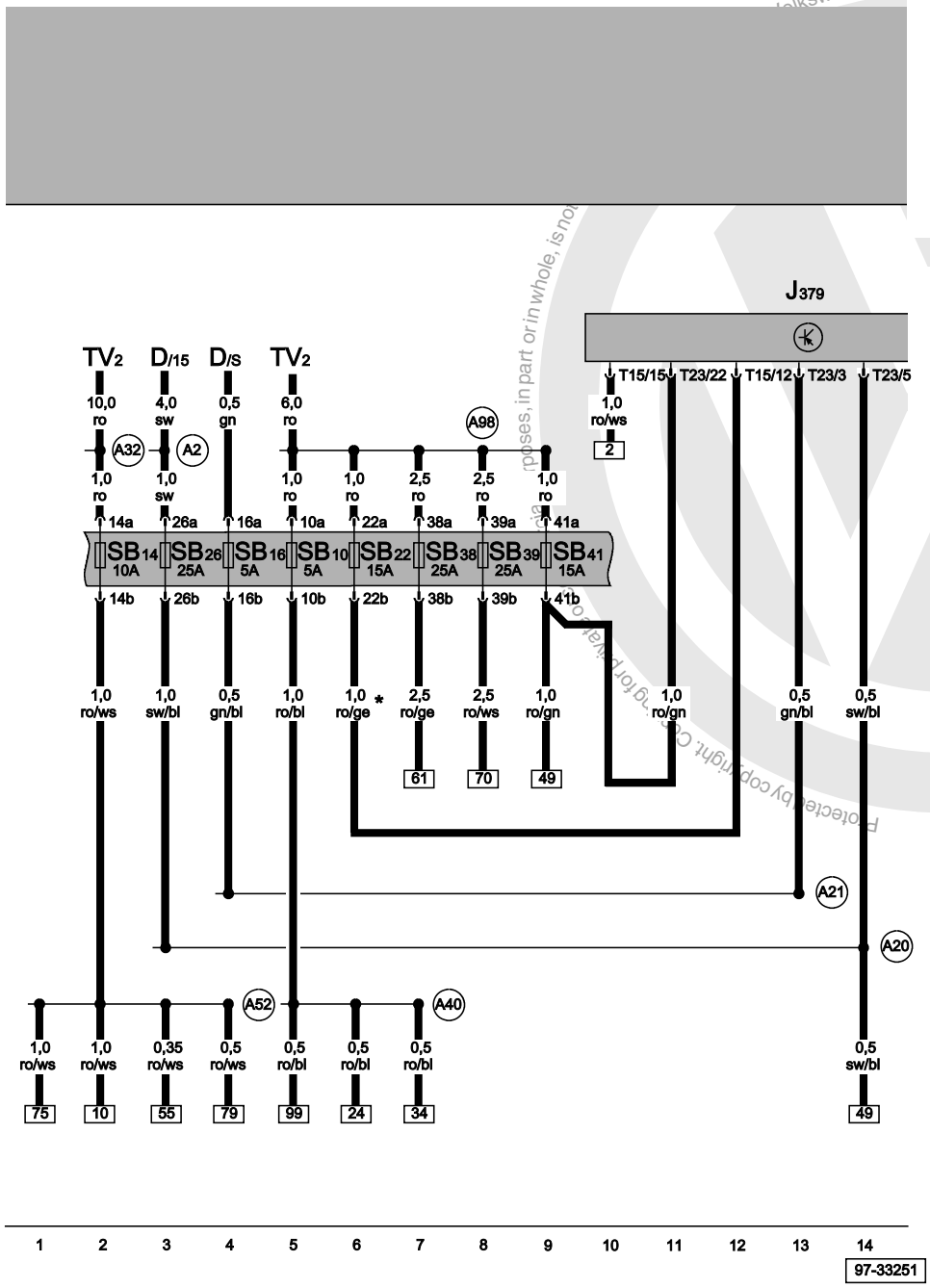

Fuses

D	Ignition/starter switch
J379	Central locking and anti-theft alarm system control unit
SB10	Fuse -10- on fuse box
SB14	Fuse -14- on fuse box
SB16	Fuse -16- on fuse box
SB22	Fuse -22- on fuse box
SB26	Fuse -26- on fuse box
SB38	Fuse -38- on fuse box
SB39	Fuse -39- on fuse box
SB41	Fuse -41- on fuse box
T15	15-pin connector
T23	23-pin connector
TV2	Terminal 30 junction box
A2	Positive (+) connection (15), in dash panel wiring harness
A20	Positive (+) connection (15a), in dash panel wiring harness
A21	Connection (86s), in dash panel wiring harness
A32	Positive (+) connection (30), in dash panel wiring harness
A40	Positive (+) connection -1- (30), in dash panel wiring harness
A52	Positive (+) connection -2- (30), in dash panel wiring harness
A98	Positive (+) connection -4- (30), in dash panel wiring harness
*	Only models with anti-theft alarm

ws	=	white
sw	=	black
ro	=	red
br	=	brown
gn	=	green
bl	=	blue
gr	=	grey
li	=	purple
ge	=	yellow
or	=	orange
rs	=	pink

Volkswagen AG does not guarantee or assume any liability with respect to the correctness of information in this document. Copyright by Volkswagen AG.
Protected by copyright. Copying for private or commercial purposes, in part or in whole, is not permitted unless authorised by Volkswagen AG.
satelettronica

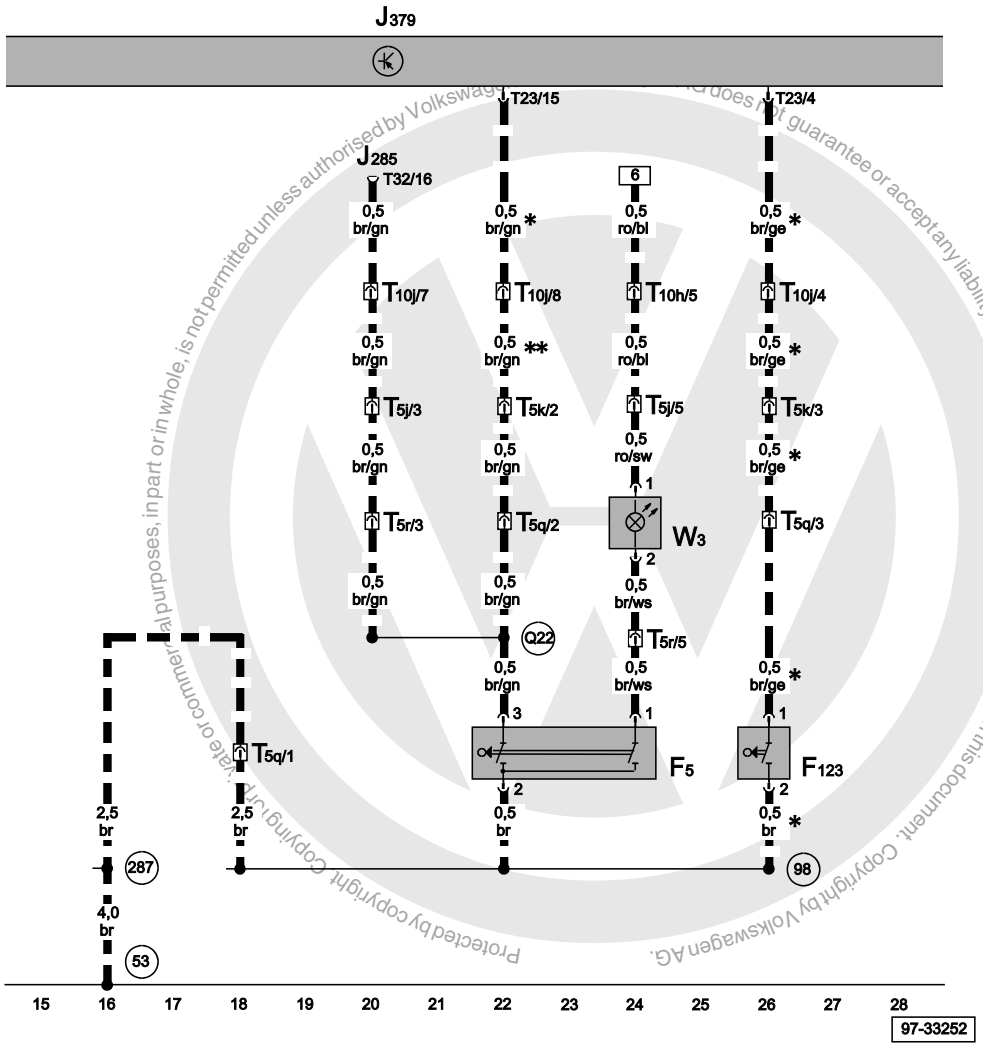

Luggage compartment light, tailgate/boot lid contact switch for anti-theft alarm

F5	Luggage compartment light switch
F123	Tailgate/boot lid contact switch for anti-theft alarm
J285	Control unit with display in dash panel insert
J379	Central locking and anti-theft alarm system control unit
T5j	5-pin connector, on left C-pillar
T5k	5-pin connector, on right C-pillar
T5q	5-pin connector, in tailgate/boot lid
T5r	5-pin connector, in tailgate/boot lid
T10h	10-pin connector, light green, coupling station under relay carrier, left
T10j	10-pin connector, grey, coupling station under relay carrier, left
T23	23-pin connector
T32	32-pin connector, blue, on dash panel insert
W3	Luggage compartment light
53	Earth point, in tailgate/boot lid, right
98	Earth connection, in tailgate/boot lid wiring harness
287	Earth connection, in rear lid prewiring wiring harness
Q22	Connection -1-, in tailgate/boot lid wiring harness
<fo:external-graphic src="/../PDOC/samba/tools/png-convert/out//slp/ft_icons/m_m_m.png" content-width="20pt" scaling="uniform"/>	Only Polo Variant
*	Only models with anti-theft alarm
**	Only models with electric window lifter

ws	=	white
sw	=	black
ro	=	red
br	=	brown
gn	=	green
bl	=	blue
gr	=	grey
li = purple
ge = yellow
or = orange
rs = pink

satelettronica

Protected by copyright. Copyright by Volkswagen AG. Copying, publication or communication to third parties is not permitted unless authorised by Volkswagen AG. Volkswagen AG does not guarantee or accept any liability with respect to the correctness of information in this document. Copyright by Volkswagen AG.

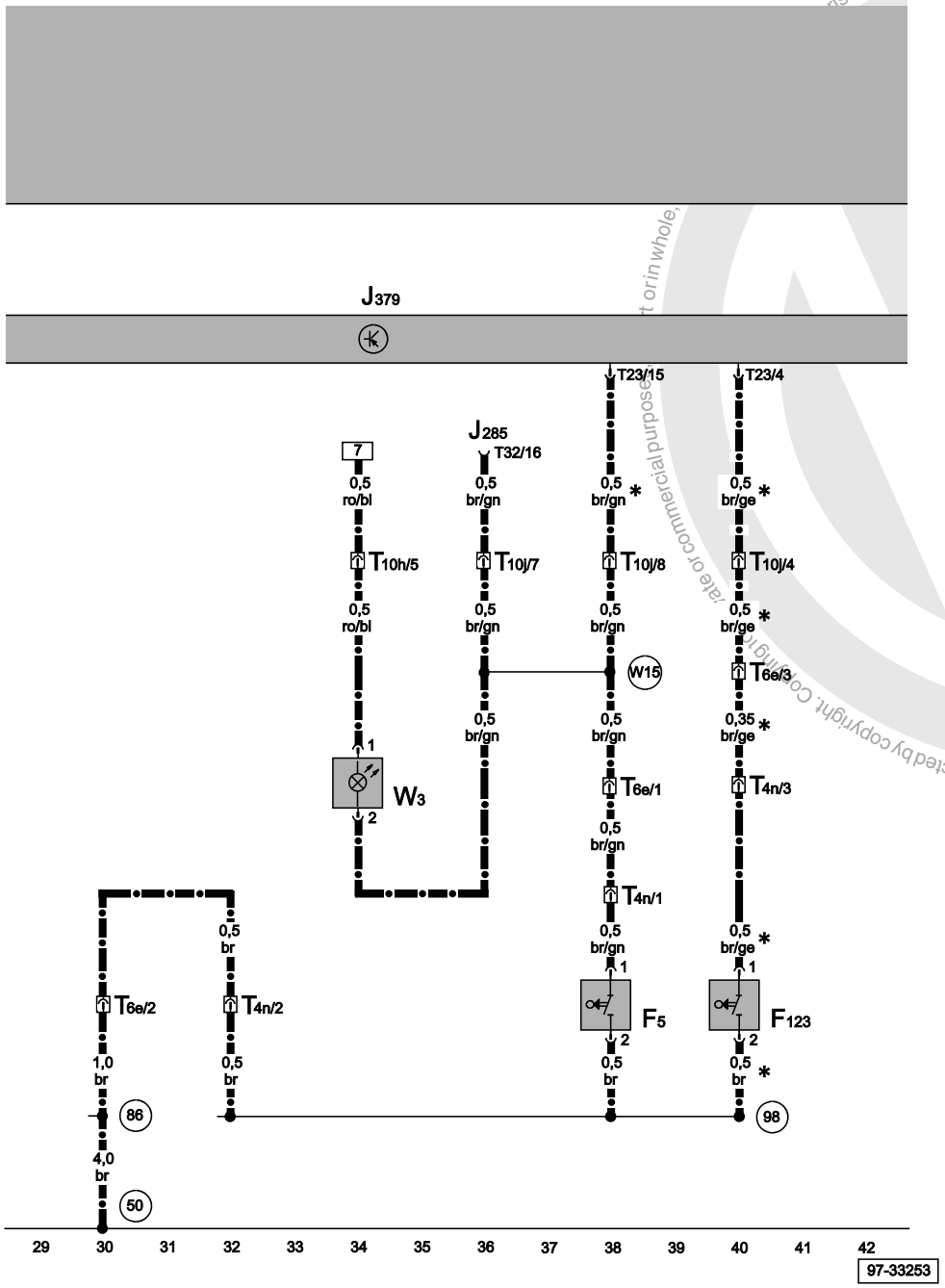

Luggage compartment light, tailgate/boot lid contact switch for anti-theft alarm

F5	Luggage compartment light switch
F123	Tailgate/boot lid contact switch for anti-theft alarm
J285	Control unit with display in dash panel insert
J379	Central locking and anti-theft alarm system control unit
T4n	4-pin connector, in tailgate/boot lid
T6e	6-pin connector, on left C-pillar
T10h	10-pin connector, light green, coupling station under relay carrier, left
T10j	10-pin connector, grey, coupling station under relay carrier, left
T23	23-pin connector
T32	32-pin connector, blue, on dash panel insert
W3	Luggage compartment light
50	Earth point, on left luggage compartment
86	Earth connection -1-, in rear wiring harness
98	Earth connection, in tailgate/boot lid wiring harness
W15	Connection -1- (luggage compartment light), in rear wiring harness
<fo:external-graphic src="/../PDOC/samba/tools/png-convert/out//slp/ft_icons/m_k_m.png" content-width="20pt" scaling="uniform"/>	Only Polo Classic
*	Only models with anti-theft alarm

ws	=	white
sw	=	black
ro	=	red
br	=	brown
gn	=	green
bl	=	blue
gr	=	grey
li	=	purple
ge	=	yellow
or	=	orange
rs	=	pink

Protected by copyright. Copying for private or commercial purposes, in part or in whole, is not permitted unless authorised by Volkswagen AG. Volkswagen AG does not guarantee or accept any liability with respect to the correctness of information in this document. Copyright by Volkswagen AG.
satelettronica

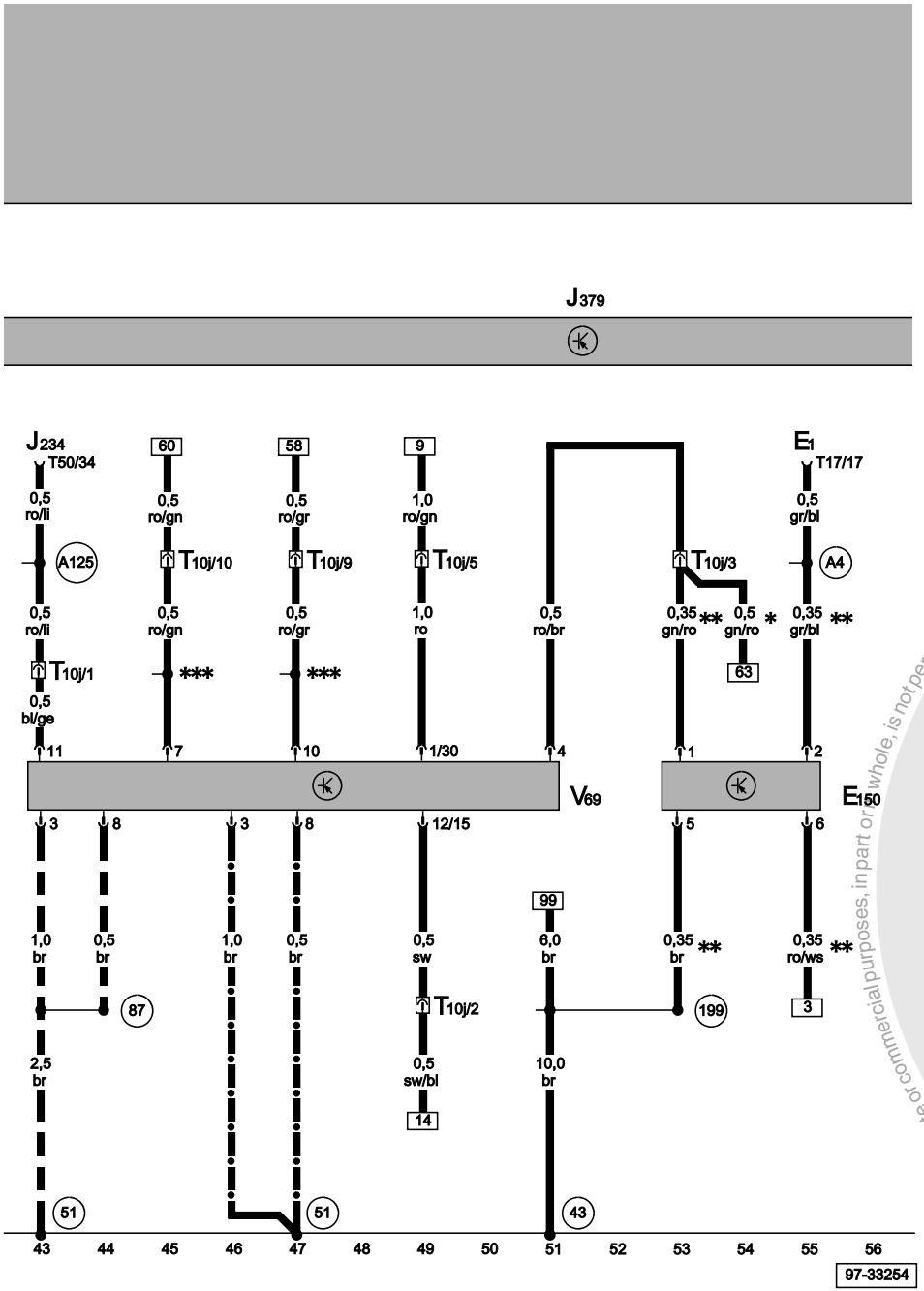

Interior locking switch, driver's side, central locking pump with control unit

E1	Light switch
E150	Interior locking switch, driver's side
J234	Airbag control unit
J379	Central locking and anti-theft alarm system control unit
T10j	10-pin connector, grey, coupling station under relay carrier, left
T17	17-pin connector, on light switch
T50	50-pin connector
V69	Central locking pump with control unit
43	Earth point, lower part of right A-pillar
51	Earth point, right luggage compartment
87	Earth connection -2-, in rear wiring harness
199	Earth connection -3-, in dash panel wiring harness
A4	Positive (+) connection (58b), in dash panel wiring harness
A125	Connection (crash signal), in dash panel wiring harness

<fo:external-graphic src="/../PDOC/samba/tools/png-convert/out//slp/ft_icons/m_m_m.png" content-width="20pt" scaling="uniform"/> Only Polo Variant

<fo:external-graphic src="/../PDOC/ Only Polo Classic

ws = white

Protected by copyright. Copying for private or commercial purposes, in part or in whole, is not permitted unless authorised by Volkswagen AG. Volkswagen AG does not guarantee or accept any liability with respect to the correctness of information in this document. Copyright by Volkswagen AG.

satelettronica

samba/
tools/
png-
convert/
out//slp/
ft_icons/
m_k_m.p
ng"
content-
width="2
0pt"
scaling="
uniform"/
>

sw	=	black
ro	=	red
br	=	brown
gn	=	green
bl	=	blue
gr	=	grey
li	=	purple
ge	=	yellow
or	=	orange
rs	=	pink

*	Only models with electric window lifter
**	Only models without electric window lifter
***	See Current Flow Diagram for electric window lifter

Protected by copyright. Copying for private or commercial purposes, in part or in whole, is not permitted unless authorised by Volkswagen AG. Volkswagen AG does not guarantee or accept any liability with respect to the correctness of information in this document. Copyright by Volkswagen AG.

satelettronica

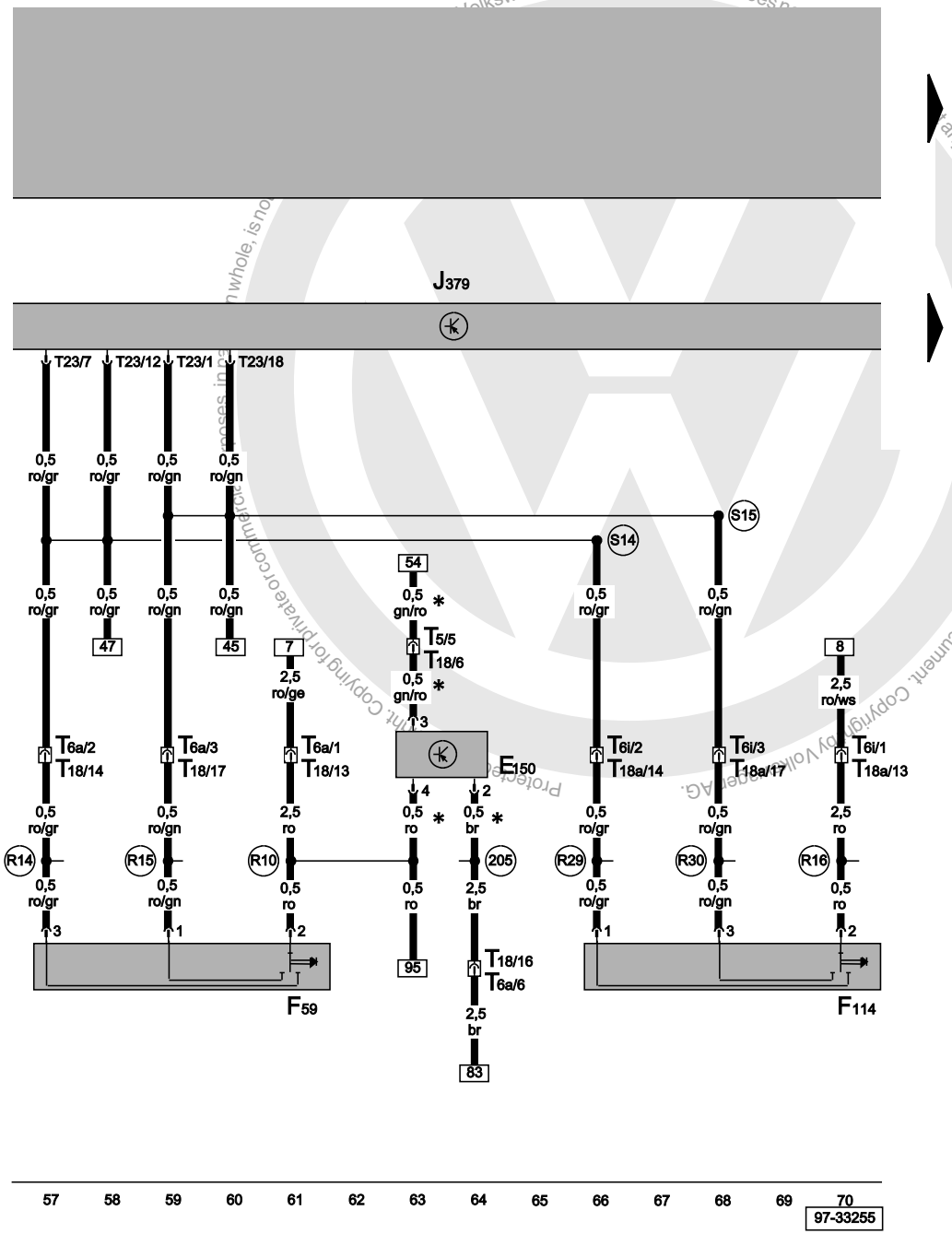

Central locking switch (driver's side), tailgate/bootlid central locking switch (front passenger's side)

E150	Interior locking switch, driver's side
F59	Central locking switch (driver's side)
F114	Central locking switch (front passenger's side)
J379	Central locking and anti-theft alarm system control unit
T5	5-pin connector, on part of left A-pillar
T6a	6-pin connector, on left A-pillar
T6i	6-pin connector, on right A-pillar
T18	18-pin connector, on part of left A-pillar
T18a	18-pin connector, on right A-pillar
T23	23-pin connector
205	Earth connection, in door wiring harness - driver's side
R10	Positive (+) connection -1- (30), in door wiring harness - driver's side
R14	Connection -1- (open), in door wiring harness, driver's side
R15	Connection -2- (closed), in door wiring harness, driver's side
R16	Positive (+) connection -1- (30), in door wiring harness - front passenger's side
R29	Connection -1- (open), in door wiring harness, front passenger's side
R30	Connection -2- (closed), in door wiring harness, front passenger's side
S14	Connection (open), in central locking wiring harness
S15	Connection (closed), in central locking wiring harness
*	Only models with electric window lifter

ws	=	white
sw	=	black
ro	=	red
br	=	brown
gn	=	green
bl	=	blue
gr	=	grey
li	=	purple
ge	=	yellow
or	=	orange
rs	=	pink

satelettronica

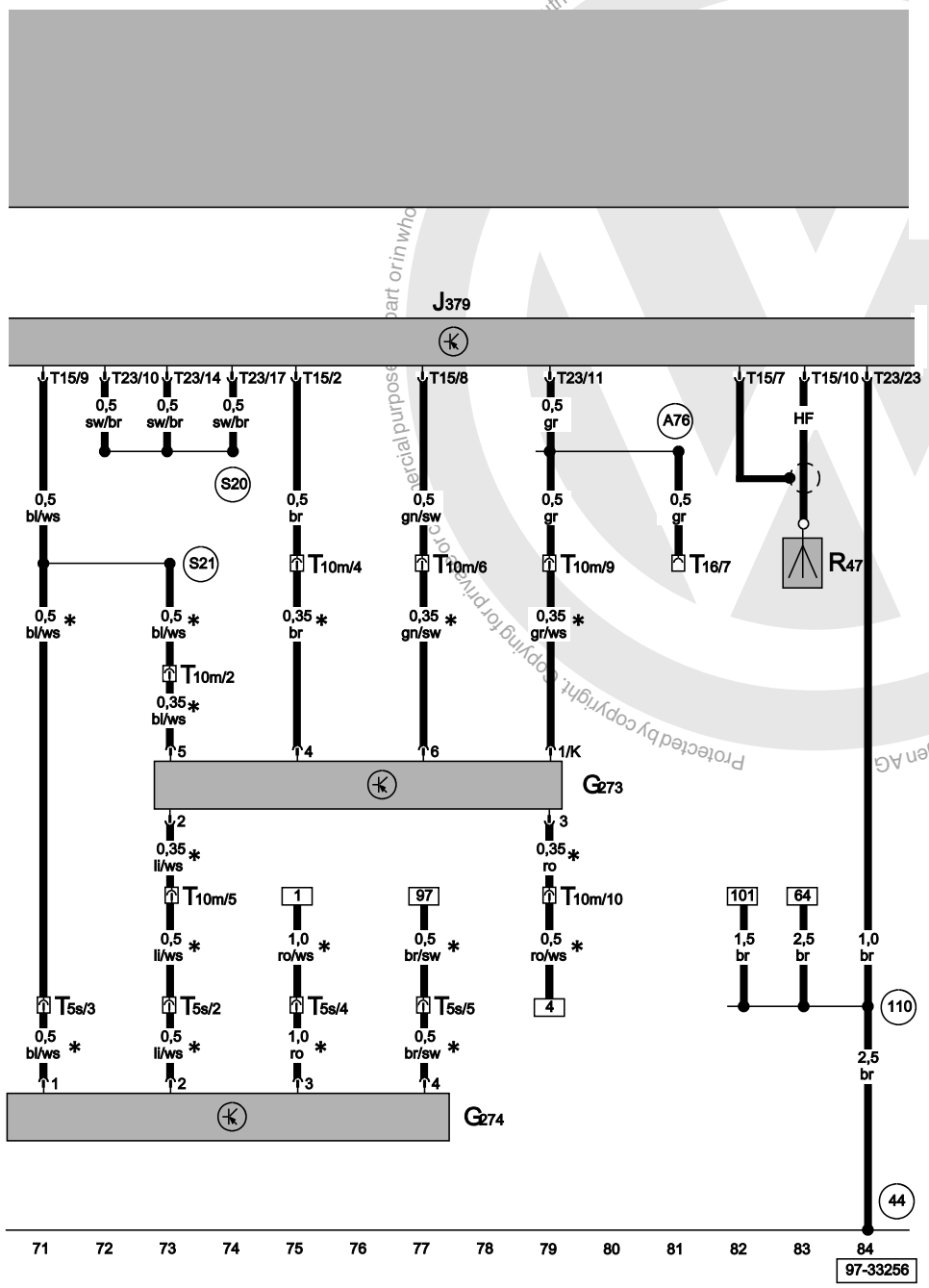

Interior monitoring sensor, central locking and anti-theft alarm system aerial

G273	Interior monitoring sensor
G274	Interior monitoring sender
J379	Central locking and anti-theft alarm system control unit
R47	Central locking and anti-theft alarm system aerial
T5s	5-pin connector, black, coupling station under relay carrier, left
T10m	10-pin connector, on part of left A-pillar
T15	15-pin connector
T16	16-pin connector, diagnostic connector
T23	23-pin connector
44	Earth point, lower part of left A-pillar
110	Earth connection -2-, in instruments wiring harness
A76	Connection (diagnosis wire K), in dash panel wiring harness
S20	Connection -4-, in central locking wiring harness
S21	Connection -5-, in central locking wiring harness
*	Only models with anti-theft alarm

ws	=	white
sw	=	black
ro	=	red
br	=	brown
gn	=	green
bl	=	blue
gr	=	grey
li	=	purple
ge	=	yellow
or	=	orange
rs	=	pink

Protected by copyright. Copying for private or commercial purposes, in part or in whole, is not permitted unless authorised by Volkswagen AG. Volkswagen AG does not guarantee or accept any liability with respect to the correctness of information in this document. Copyright by Volkswagen AG.
satelettronica

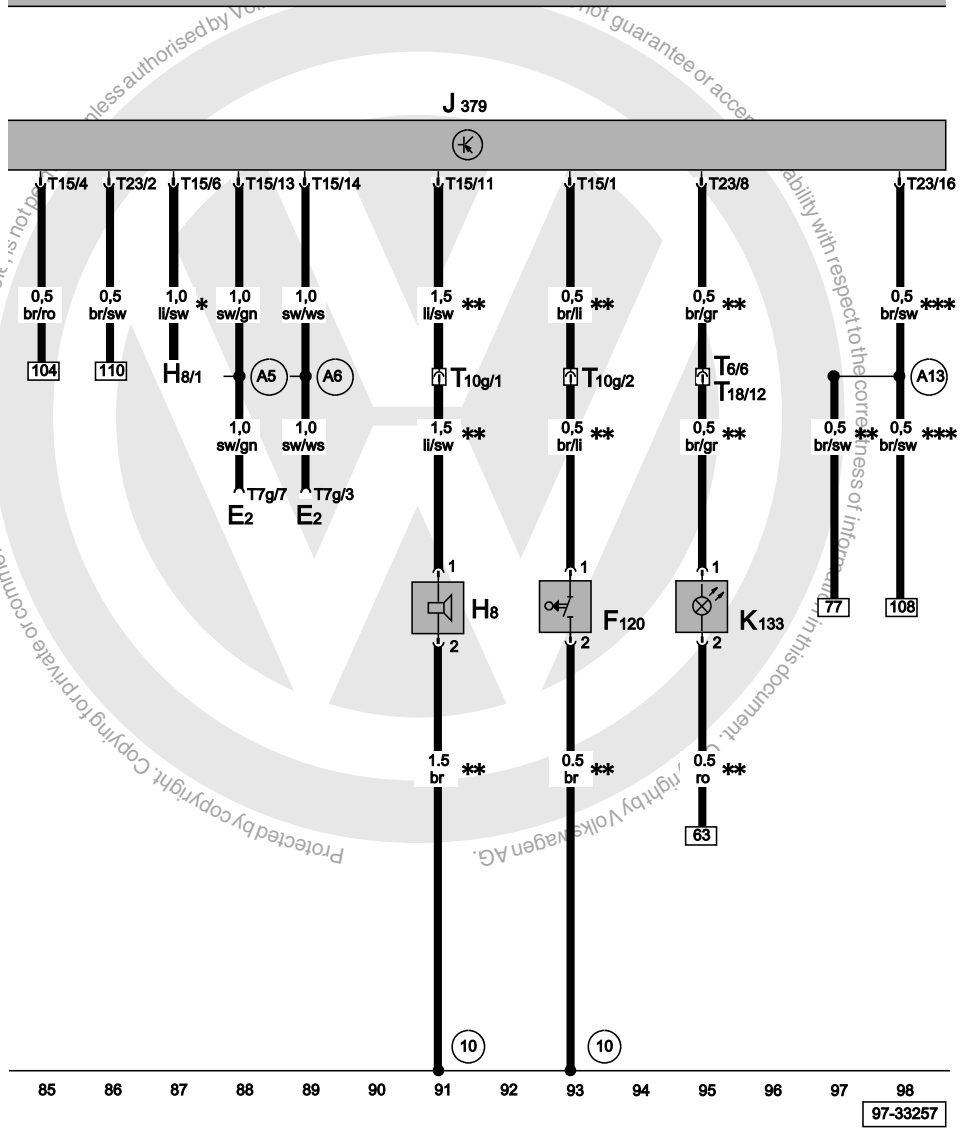

Anti-theft alarm system horn, anti-theft alarm/vermin repellent system contact switch, central locking warning lamp -SAFE-

E2	Turn signal switch
F120	Anti-theft alarm/vermin repellent system contact switch
H8	Anti-theft alarm system horn
J379	Central locking and anti-theft alarm system control unit
K133	Central locking warning lamp -SAFE-
T6	6-pin connector, on left A-pillar
T7g	7-pin connector
T10g	10-pin connector, red, coupling station under relay carrier, left
T15	15-pin connector
T18	18-pin connector, on part of left A-pillar
T23	23-pin connector
10	Earth point, in plenum chamber
A5	Positive (+) connection (right turn signal), in dash panel wiring harness
A6	Positive (+) connection (left turn signal), in dash panel wiring harness
A13	Connection (door contact switch), in dash panel wiring harness
*	Only models Great Britain
**	Only models with anti-theft alarm
***	Only models with radio-operated remote control

ws	=	white
sw	=	black
ro	=	red
br	=	brown
gn	=	green
bl	=	blue
gr	=	grey
li	=	purple
ge	=	yellow
or	=	orange
rs	=	pink

Protected by copyright. Copying for private or commercial purposes, in part or in whole, is not permitted unless authorised by Volkswagen AG. Volkswagen AG does not guarantee or accept any liability with respect to the correctness of information in this document. ©copyright by Volkswagen AG.

satelettronica

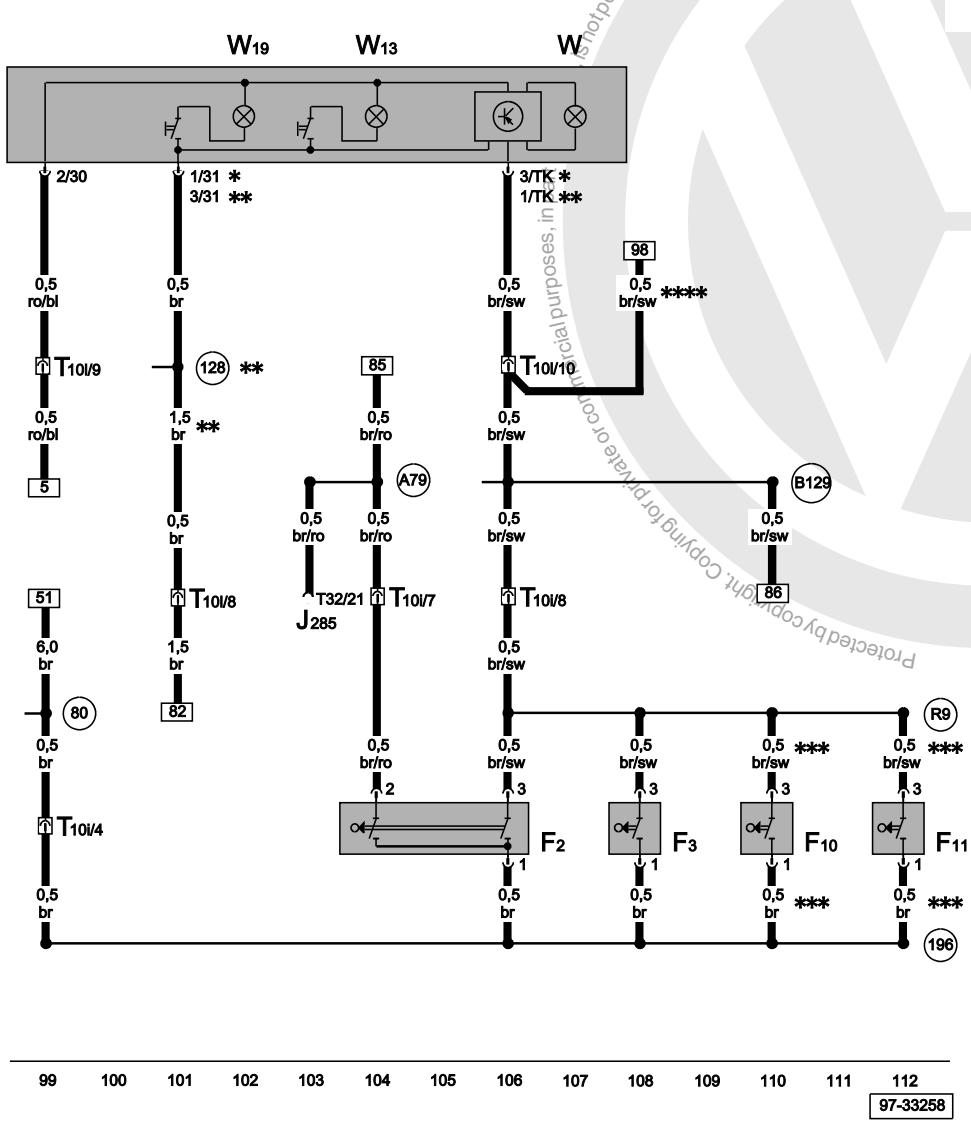

Interior light, door contact switch

F2	Door contact switch, driver's side
F3	Door contact switch, front passenger's side
F10	Rear left door contact switch
F11	Rear right door contact switch
J285	Control unit with display in dash panel insert
T10i	10-pin connector, orange, coupling station under relay carrier, left
T10l	10-pin connector, on part of left A-pillar
T32	32-pin connector, blue, on dash panel insert
W	front interior light
W13	Front passenger reading light
W19	Reading light, driver's side
80	Earth connection -1-, in dash panel wiring harness
128	Earth connection -1-, in interior light wiring harness
196	Earth connection -3-, in rear wiring harness
A79	Connection (hot light switch), in dash panel wiring harness
B129	Connection (interior light, 311), in interior wiring harness
R9	Connection (door contact switch), in rear wiring harness
*	Only models with reading light
**	Only models with sliding sunroof
***	Only 4-door models
****	Only models with radio-operated remote control

ws	=	white
sw	=	black
ro	=	red
br	=	brown
gn	=	green
bl	=	blue
gr	=	grey
li	=	purple
ge	=	yellow
or	=	orange
rs	=	pink

Protected by copyright. Copying for private or commercial purposes, in part or in whole, is not permitted unless authorized by Volkswagen AG. Volkswagen AG does not guarantee or accept any liability with respect to the correctness of information in this document. Copyright by Volkswagen AG.
satelettronica

Electric window lifter

From May 2001

For alternatives to relay and fuse positions as well as multi-pin connector wiring - see "Fitting locations" section.

Position of fuses on relay plate:

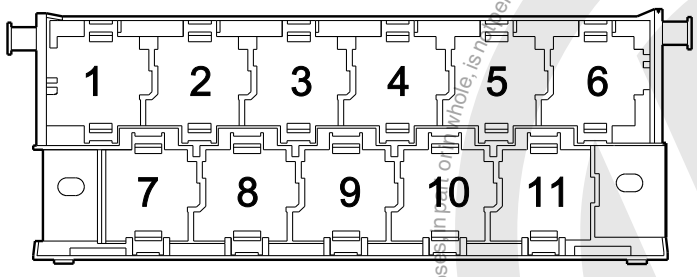

97-22850

4 - Window lifter single fuse (S37)
5 - Window lifter single fuse 2 (S280)

Fuse colours

30 A - green
25 A - white
20 A - yellow
15 A - blue
10 A - red
7.5 A - brown
5 A - beige
3 A - purple

Protected by copyright. Copying for private or commercial purposes, in part or in whole, is not permitted unless authorised by Volkswagen AG. Volkswagen AG does not guarantee or accept any liability with respect to the correctness of information in this document. Copyright by Volkswagen AG.

satelettronica

Authorised by Volkswagen AG. Volkswagen AG does not guarantee or assume responsibility with respect to the correctness of information in this document. Copyright by Volkswagen AG. Protected by copyright. Copying for private or commercial purposes, in part or in whole, is not permitted.

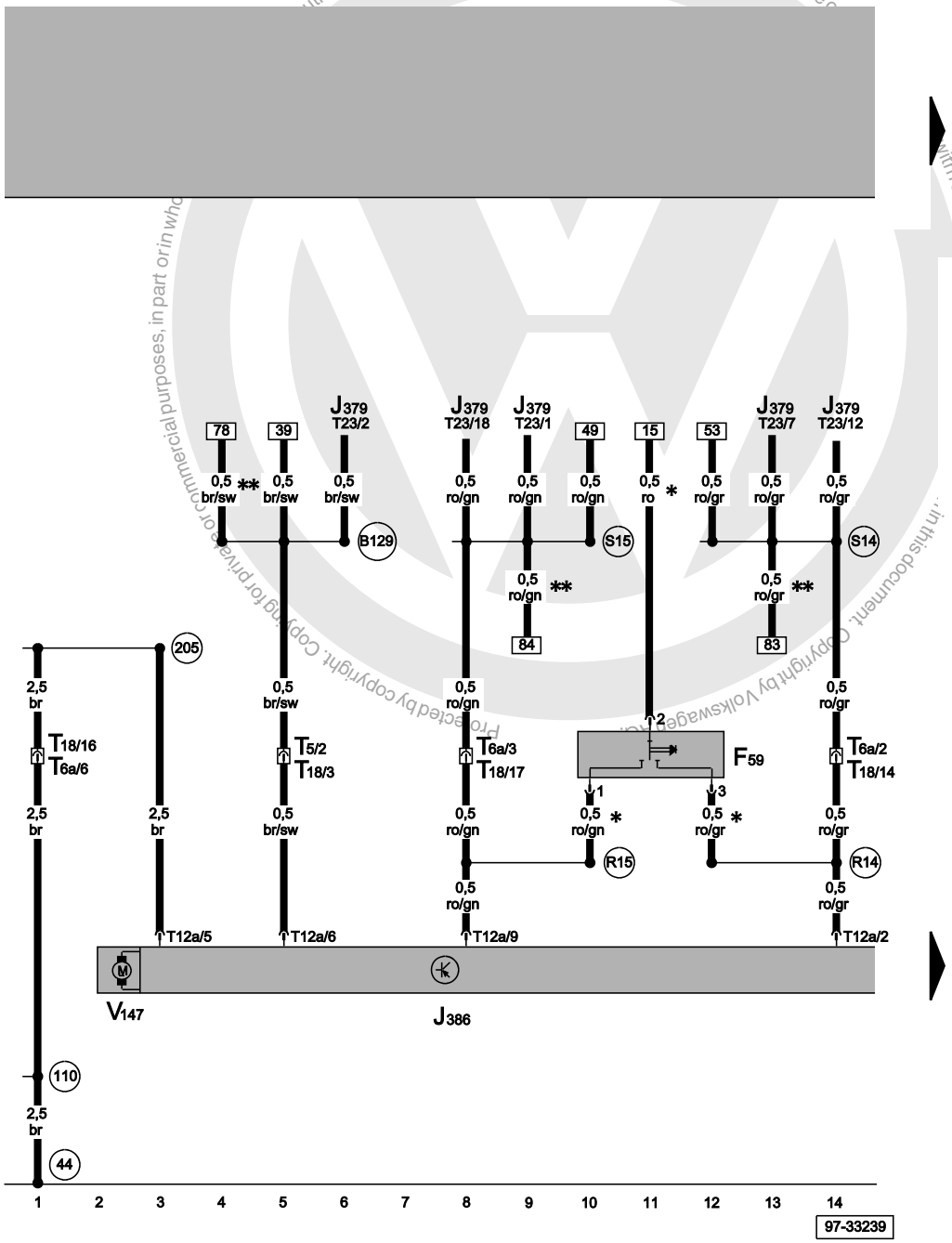

Window lifter motor, driver's side, central locking switch, door control unit, driver's side

F59	Central locking switch (driver's side)
J379	Central locking and anti-theft alarm system control unit
J386	Door control unit, driver's side
T5	5-pin connector, on part of left A-pillar
T6a	6-pin connector, on left A-pillar
T12a	12-pin connector, on door control unit, driver's side
T18	18-pin connector, on part of left A-pillar
T23	23-pin connector
V147	Window lifter motor, driver's side
44	Earth point, lower part of left A-pillar
110	Earth connection -2-, in instruments wiring harness
205	Earth connection, in door wiring harness - driver's side
B129	Connection (interior light, 311), in interior wiring harness
R14	Connection -1- (open), in door wiring harness, driver's side
R15	Connection -2- (closed), in door wiring harness, driver's side
S14	Connection (open), in central locking wiring harness
S15	Connection (closed), in central locking wiring harness
*	Only models with central locking
**	Only models with rear window lifter

ws	=	white
sw	=	black
ro	=	red
br	=	brown
gn	=	green
bl	=	blue
gr	=	grey
li	=	purple
ge	=	yellow
or	=	orange
rs	=	pink

satelettronica

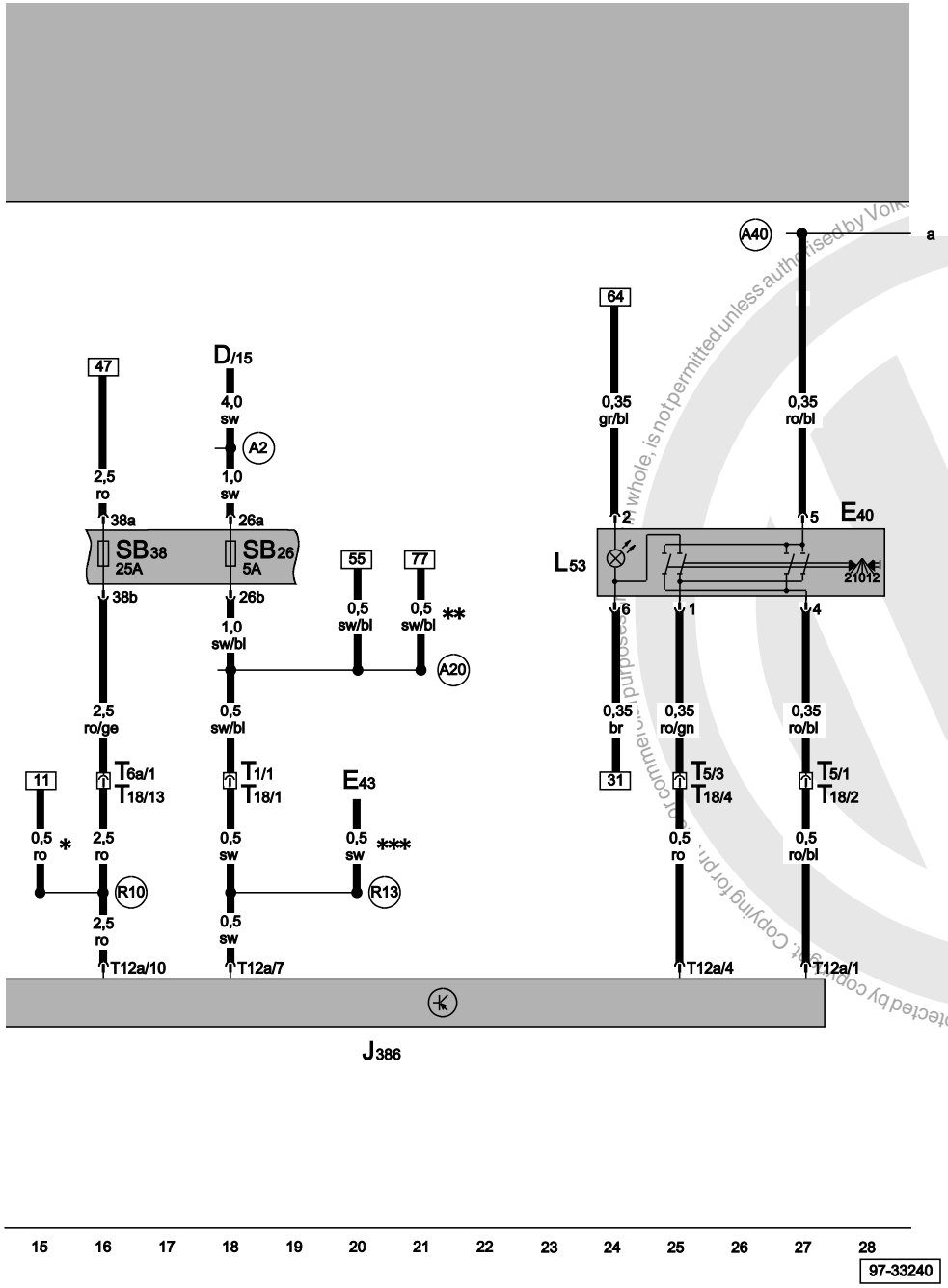

Front left window lifter switch, door control unit, driver's side, fuses

D	Ignition/starter switch
E40	Front left window lifter switch
E43	Mirror adjustment switch
J386	Door control unit, driver's side
L53	Window lifter switch light bulb
SB26	Fuse -26- on fuse box
SB38	Fuse -38- on fuse box
T1	Single connector, on part of left A-pillar
T5	5-pin connector, on part of left A-pillar
T6a	6-pin connector, on left A-pillar
T12a	12-pin connector, on door control unit, driver's side
T18	18-pin connector, on part of left A-pillar
A2	Positive (+) connection (15), in dash panel wiring harness
A20	Positive (+) connection (15a), in dash panel wiring harness
A40	Positive (+) connection -1- (30), in dash panel wiring harness
R10	Positive (+) connection -1- (30), in door wiring harness - driver's side
R13	Positive (+) connection -4- (15), in door wiring harness - driver's side
*	Only models with central locking
**	Only models with rear window lifter
***	Only models with electrically adjustable exterior mirror

ws	=	white
sw	=	black
ro	=	red
br	=	brown
gn	=	green
bl	=	blue
gr	=	grey
li = purple
ge = yellow
or = orange
rs = pink

Protected by copyright. Copying for private or commercial purposes, in part or in whole, is not permitted unless authorised by Volkswagen AG. Volkswagen AG does not guarantee or assume any liability with respect to the correctness of information in this document. Copyright by Volkswagen AG.

satelettronica

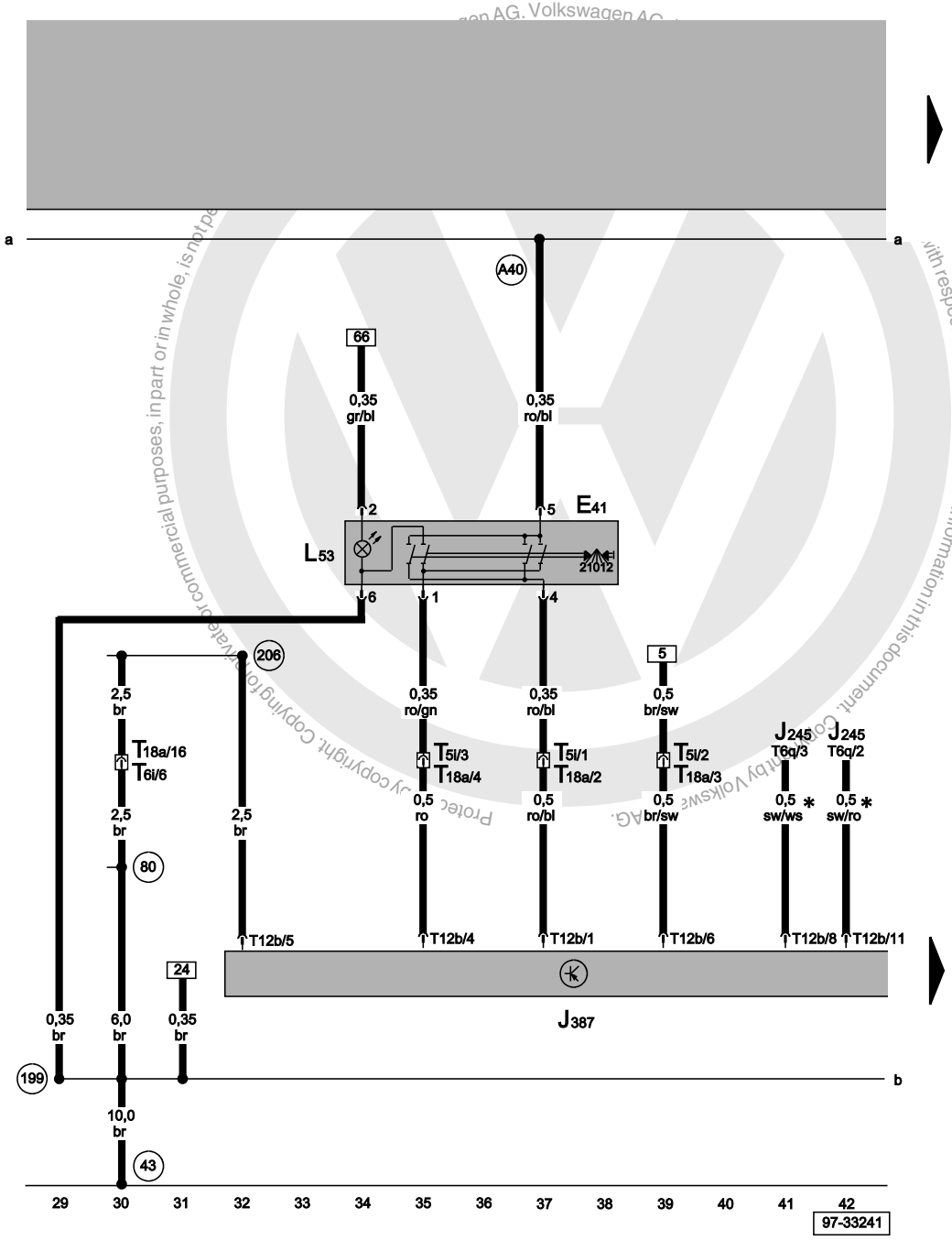

Front right window lifter switch, door control unit, front passenger's side

E41	Front right window lifter switch
J245	Sliding sunroof adjustment control unit
J387	Door control unit, front passenger's side
L53	Window lifter switch light bulb
T5i	5-pin connector, on part of right A-pillar
T6i	6-pin connector, on right A-pillar
T6q	6-pin connector, in roof
T12b	12-pin connector, on door control unit, front passenger's side
T18a	18-pin connector, on right A-pillar
43	Earth point, lower part of right A-pillar
80	Earth connection -1-, in dash panel wiring harness
199	Earth connection -3-, in dash panel wiring harness
206	Earth connection, in door wiring harness - front passenger's side
A40	Positive (+) connection -1- (30), in dash panel wiring harness
*	Only models with sliding / tilting sunroof

ws	=	white
sw	=	black
ro	=	red
br	=	brown
gn	=	green
bl	=	blue
gr	=	grey
li = purple
ge = yellow
or = orange
rs = pink

satelettronica

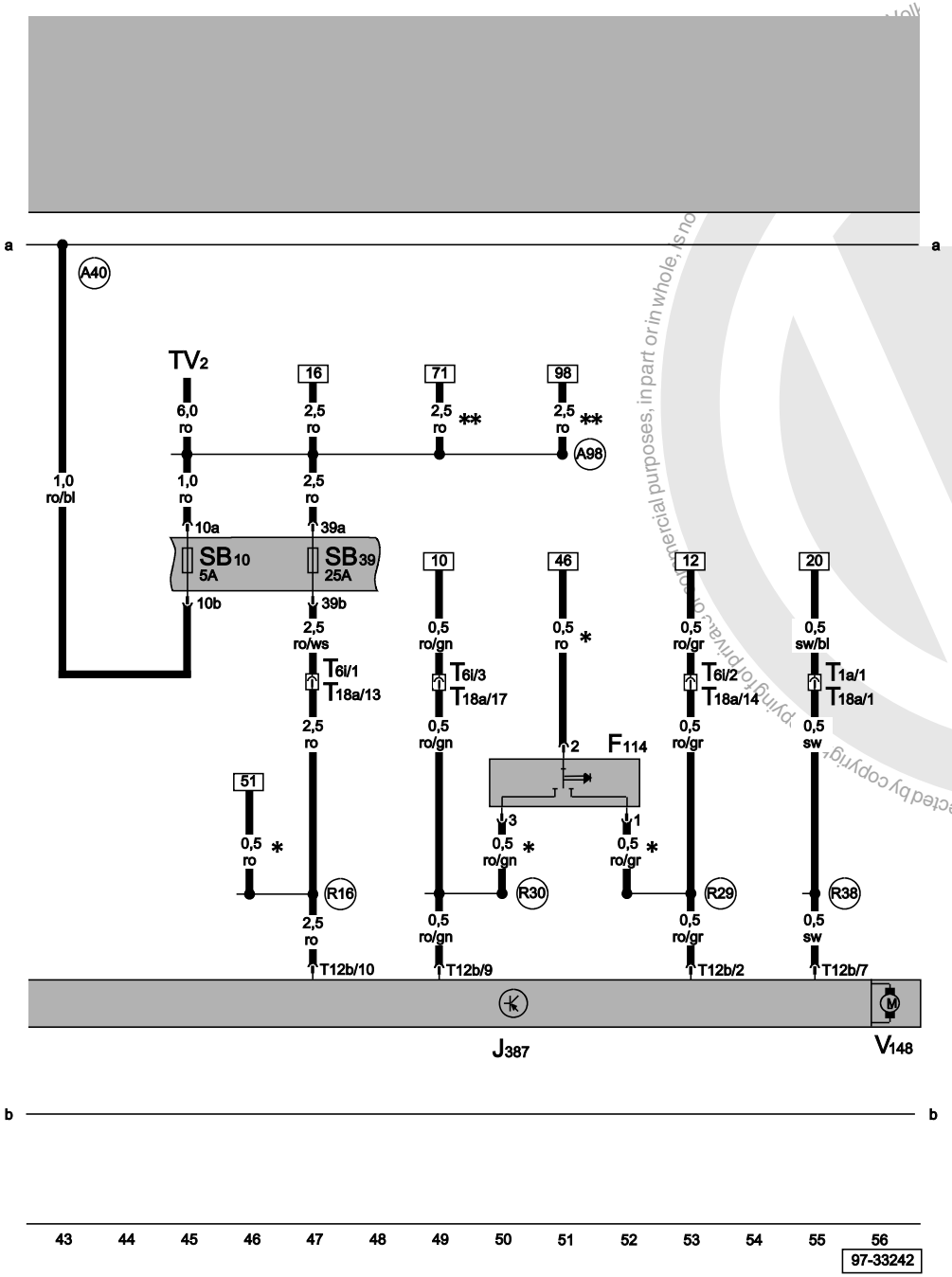

Central locking switch (front passenger's side), door control unit, front passenger's side, fuses, window lifter motor, front passenger's side

F114	Central locking switch (front passenger's side)
J387	Door control unit, front passenger's side
SB10	Fuse -10- on fuse box
SB39	Fuse -39- on fuse box
T1a	Single connector, on right A-pillar
T6i	6-pin connector, on right A-pillar
T12b	12-pin connector, on door control unit, front passenger's side
T18a	18-pin connector, on right A-pillar
TV2	Terminal 30 junction box
V148	Window lifter motor, front passenger's side
A40	Positive (+) connection -1- (30), in dash panel wiring harness
A98	Positive (+) connection -4- (30), in dash panel wiring harness
R16	Positive (+) connection -1- (30), in door wiring harness - front passenger's side
R29	Connection -1- (open), in door wiring harness, front passenger's side
R30	Connection -2- (closed), in door wiring harness, front passenger's side
R38	Connection -1- (window lifter), in door wiring harness, front passenger's side
*	Only models with central locking
**	Only models with rear window lifter

ws	=	white
sw	=	black
ro	=	red
br	=	brown
gn	=	green
bl	=	blue
gr	=	grey
li	=	purple
ge	=	yellow
or	=	orange
rs	=	pink

Protected by copyright. Copying for private or commercial purposes, in part or in whole, is not permitted unless authorised by Volkswagen AG. Volkswagen AG does not guarantee or accept any liability with respect to the correctness of information in this document. Copyright by Volkswagen AG.
satelettronica

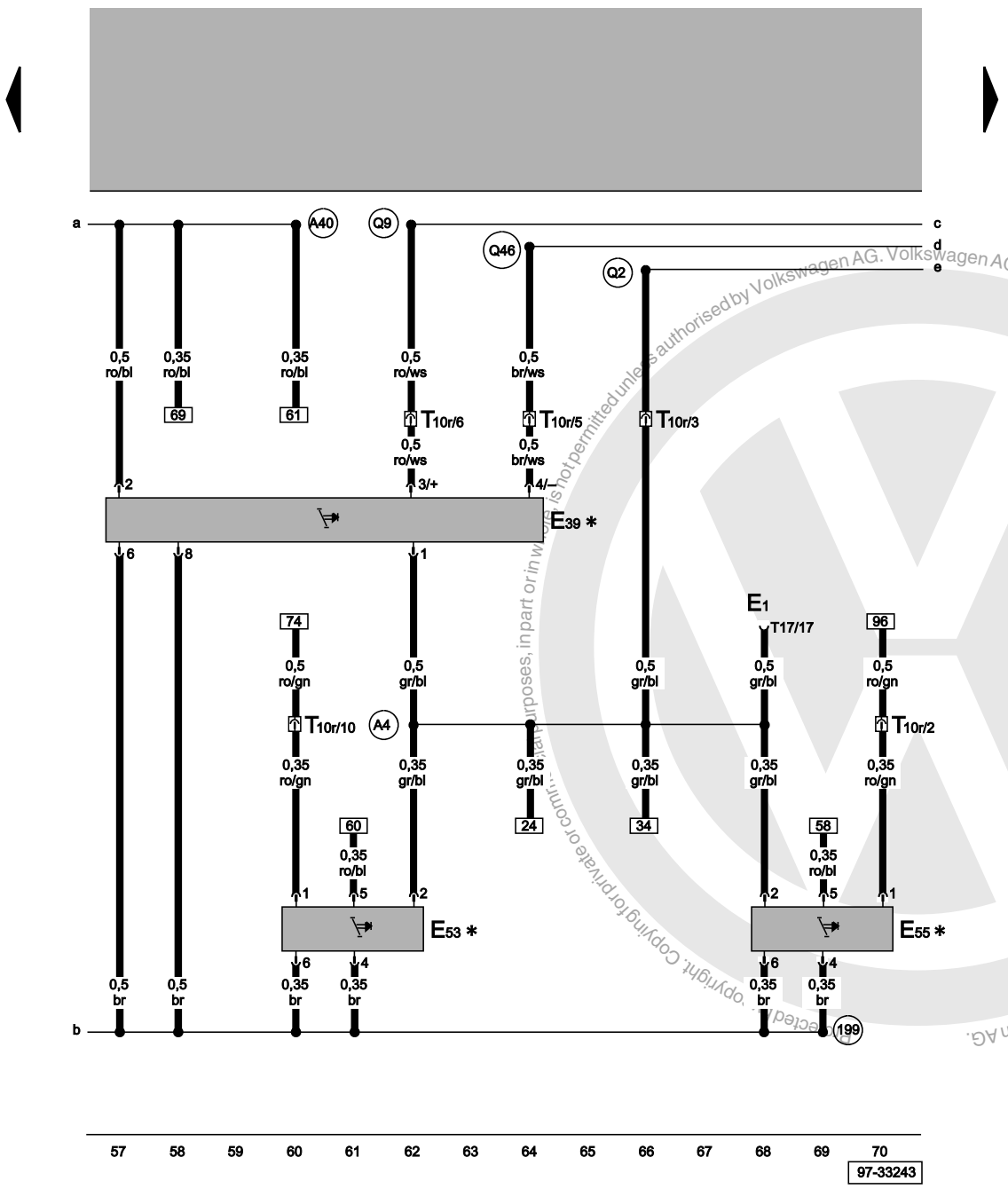

Rear window lifter isolation switch, rear left window lifter switch

E1	Light switch
E39	Rear window lifter isolation switch
E53	Rear left window lifter switch, driver
E55	Rear right window lifter switch, driver
T10r	10-pin connector, blue, coupling station under relay carrier, left
T17	17-pin connector, on light switch
199	Earth connection -3-, in dash panel wiring harness
A4	Positive (+) connection (58b), in dash panel wiring harness
A40	Positive (+) connection -1- (30), in dash panel wiring harness
Q2	Positive (+) connection (58), in window lifter wiring harness
Q9	Connection in window lifter wiring harness
Q46	Connection (child safety), in window lifter wiring harness
*	Only models with rear window lifter

ws	=	white
sw	=	black
ro	=	red
br	=	brown
gn	=	green
bl	=	blue
gr	=	grey
li	=	purple
ge	=	yellow
or	=	orange
rs	=	pink

satelettronica

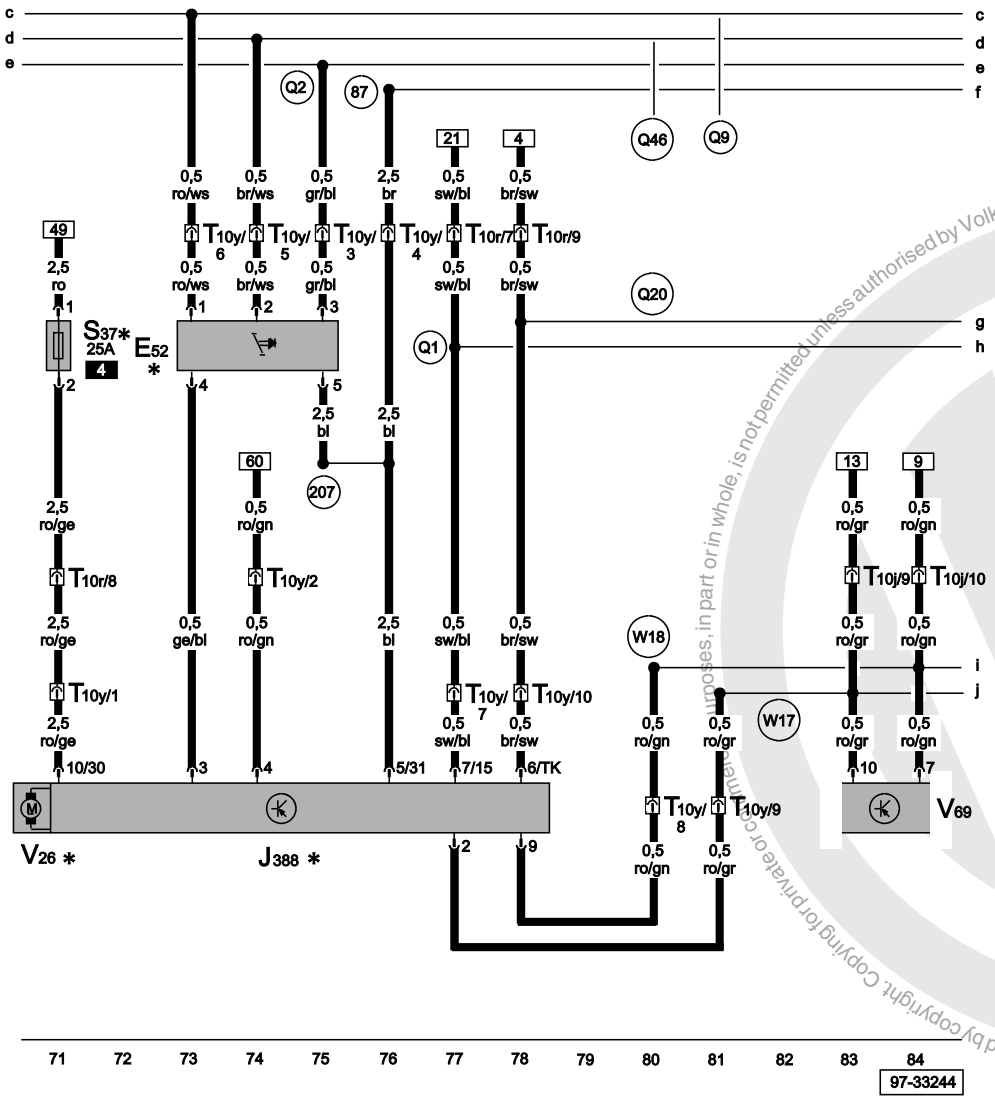

Window lifter motor, rear left

E52	Rear left window lifter switch, in door
J388	Door control unit, rear left
S37	Window lifter single fuse
T10j	10-pin connector, grey, coupling station under relay carrier, left
T10r	10-pin connector, blue, coupling station under relay carrier, left
T10y	10-pin connector, on left B-pillar
V26	Window lifter motor, rear left
V69	Central locking pump with control unit
87	Earth connection -2-, in rear wiring harness
207	Earth connection, in rear left door wiring harness
Q1	Positive (+) connection (30), in window lifter wiring harness
Q2	Positive (+) connection (58), in window lifter wiring harness
Q9	Connection in window lifter wiring harness
Q20	Connection -1- (door contact switch), in window lifter wiring harness
Q46	Connection (child safety), in window lifter wiring harness
W17	Connection (lock cylinder open), in rear wiring harness
W18	Connection (lock cylinder closed), in rear wiring harness
*	Only models with rear window lifter

ws	=	white
sw	=	black
ro	=	red
br	=	brown
gn	=	green
bl	=	blue
gr	=	grey
li	=	purple
ge	=	yellow
or	=	orange
rs	=	pink

Protected by copyright. Copying for private or commercial purposes, in part or in whole, is not permitted unless authorised by Volkswagen AG. Volkswagen AG does not guarantee or accept any liability with respect to the correctness of information in this document. Copyright by Volkswagen AG.

satelettronica

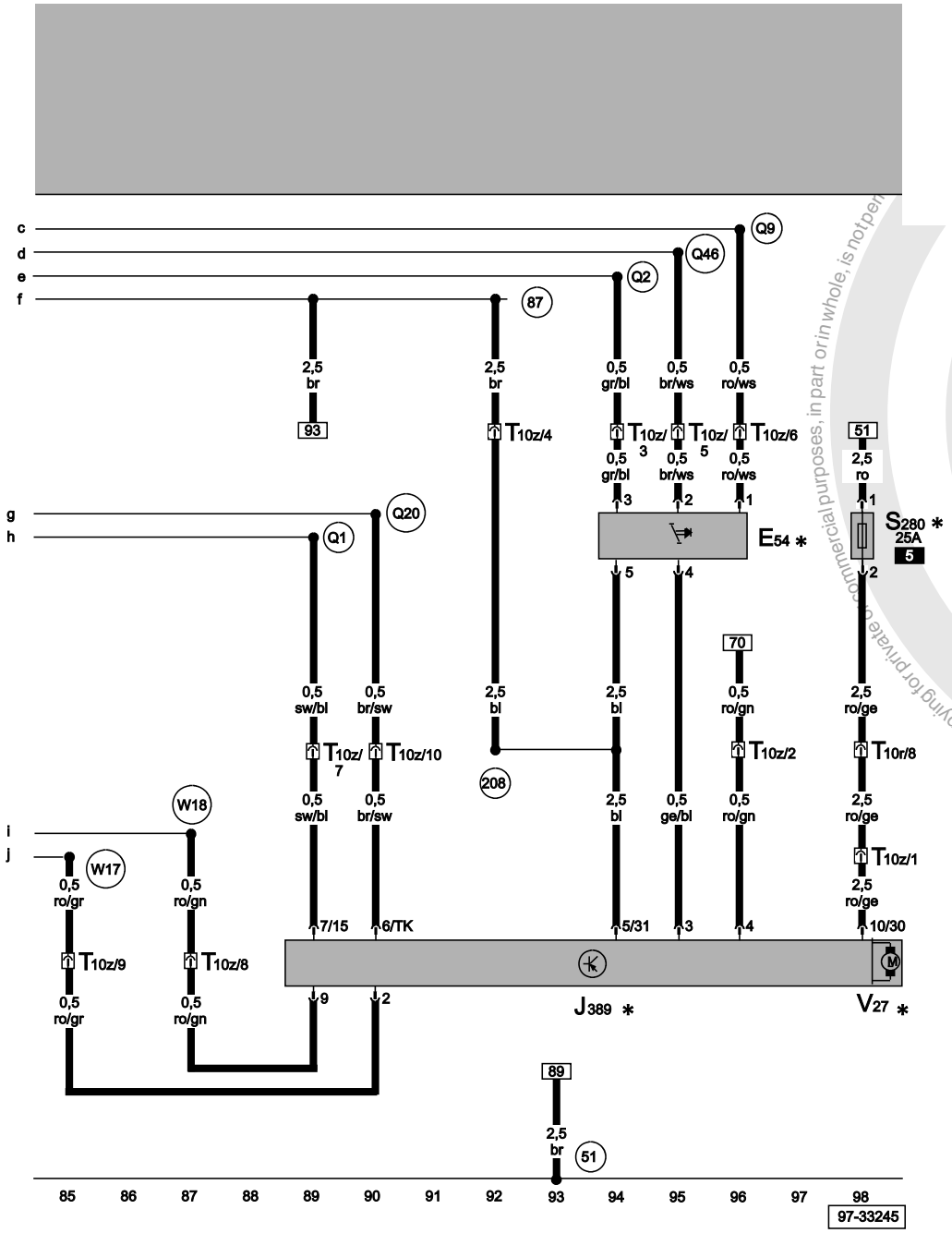

Window lifter motor, rear right

E54	Rear right window lifter switch, in door
J389	Door control unit, rear right
S280	Window lifter single fuse 2
T10r	10-pin connector, blue, coupling station under relay carrier, left
T10z	10-pin connector, on right B-pillar
V27	Window lifter motor, rear right
51	Earth point, right luggage compartment
87	Earth connection -2-, in rear wiring harness
208	Earth connection, in rear right door wiring harness
Q1	Positive (+) connection (30), in window lifter wiring harness
Q2	Positive (+) connection (58), in window lifter wiring harness
Q9	Connection in window lifter wiring harness
Q20	Connection -1- (door contact switch), in window lifter wiring harness
Q46	Connection (child safety), in window lifter wiring harness
W17	Connection (lock cylinder open), in rear wiring harness
W18	Connection (lock cylinder closed), in rear wiring harness
*	Only models with rear window lifter

ws	=	white
sw	=	black
ro	=	red
br	=	brown
gn	=	green
bl	=	blue
gr	=	grey
li	=	purple
ge	=	yellow
or	=	orange
rs	=	pink

Protected by copyright. Copying for private or commercial purposes, in part or in whole, is not permitted unless authorised by Volkswagen AG. Volkswagen AG does not guarantee or accept any liability with respect to the correctness of information in this document. Copyright by Volkswagen AG.

satelettronica

Daytime driving lights

From May 2001

For alternatives to relay and fuse positions as well as multi-pin connector wiring - see "Fitting locations" section.

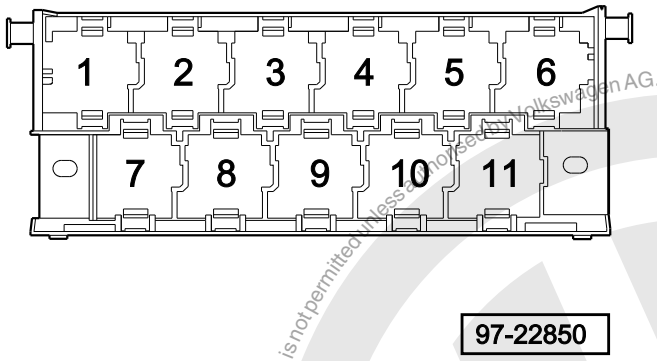

Fuse colours

30 A - green
25 A - white
20 A - yellow
15 A - blue
10 A - red
7.5 A - brown
5 A - beige
3 A - purple

Protected by copyright. Copying for private or commercial purposes, in part or in whole, is not permitted unless authorised by Volkswagen AG. Volkswagen AG does not guarantee or accept any liability with respect to the correctness of information in this document. Copyright by Volkswagen AG.

satelettronica

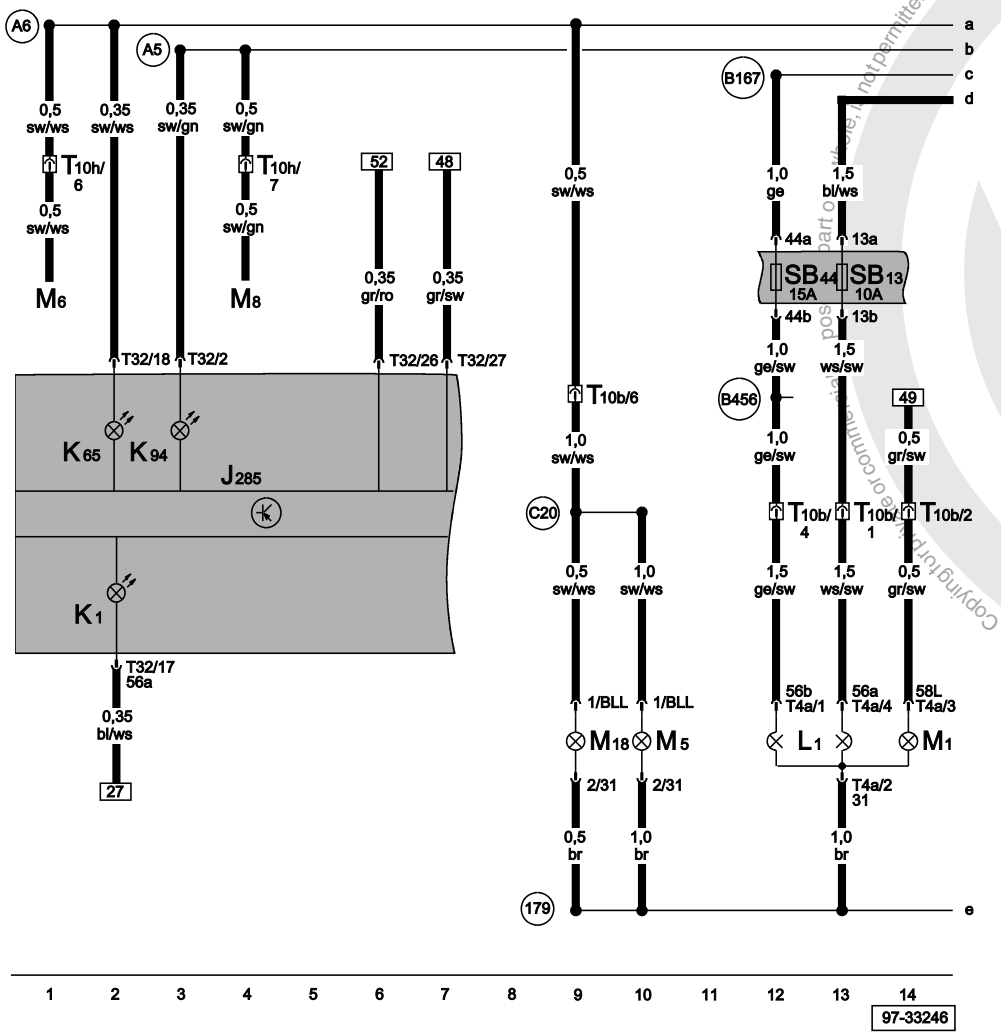

Headlight, left, turn signal front right, turn signal bulb, rear, dash panel insert

J285	Control unit with display in dash panel insert
K1	Main beam warning lamp
K65	Left turn signal warning lamp
K94	Right turn signal warning lamp
L1	Twin filament bulb for headlight, left
M1	Side light bulb, left
M5	Turn signal bulb, front left
M6	Turn signal bulb, rear left
M8	Turn signal bulb, rear right
M18	Side turn signal bulb, left
T4a	4-pin connector, in headlight, left
T10b	10-pin connector, white, coupling station under relay carrier, left
T10h	10-pin connector, light green, coupling station under relay carrier, left
T32	32-pin connector, blue
SB13	Fuse -13- on fuse box
SB44	Fuse -44- on fuse box
179	Earth connection, in left headlight wiring harness
A5	Positive (+) connection (right turn signal), in dash panel wiring harness
A6	Positive (+) connection (left turn signal), in dash panel wiring harness
B167	Connection (56b), in interior wiring harness
B456	Connection (56b), in main wiring harness
C20	Connection (turn signal, left), in headlight wiring harness

ws	=	white
sw	=	black
ro	=	red
br	=	brown
gn	=	green
bl	=	blue
gr	=	grey
li	=	purple
ge	=	yellow
or	=	orange
rs	=	pink

Protected by copyright. Copying for private or commercial purposes, in part or whole, is not permitted unless authorised by Volkswagen AG. Volkswagen AG does not guarantee or assume any liability with respect to the correctness of information in this document. Copyright by Volkswagen AG.
satelettronica

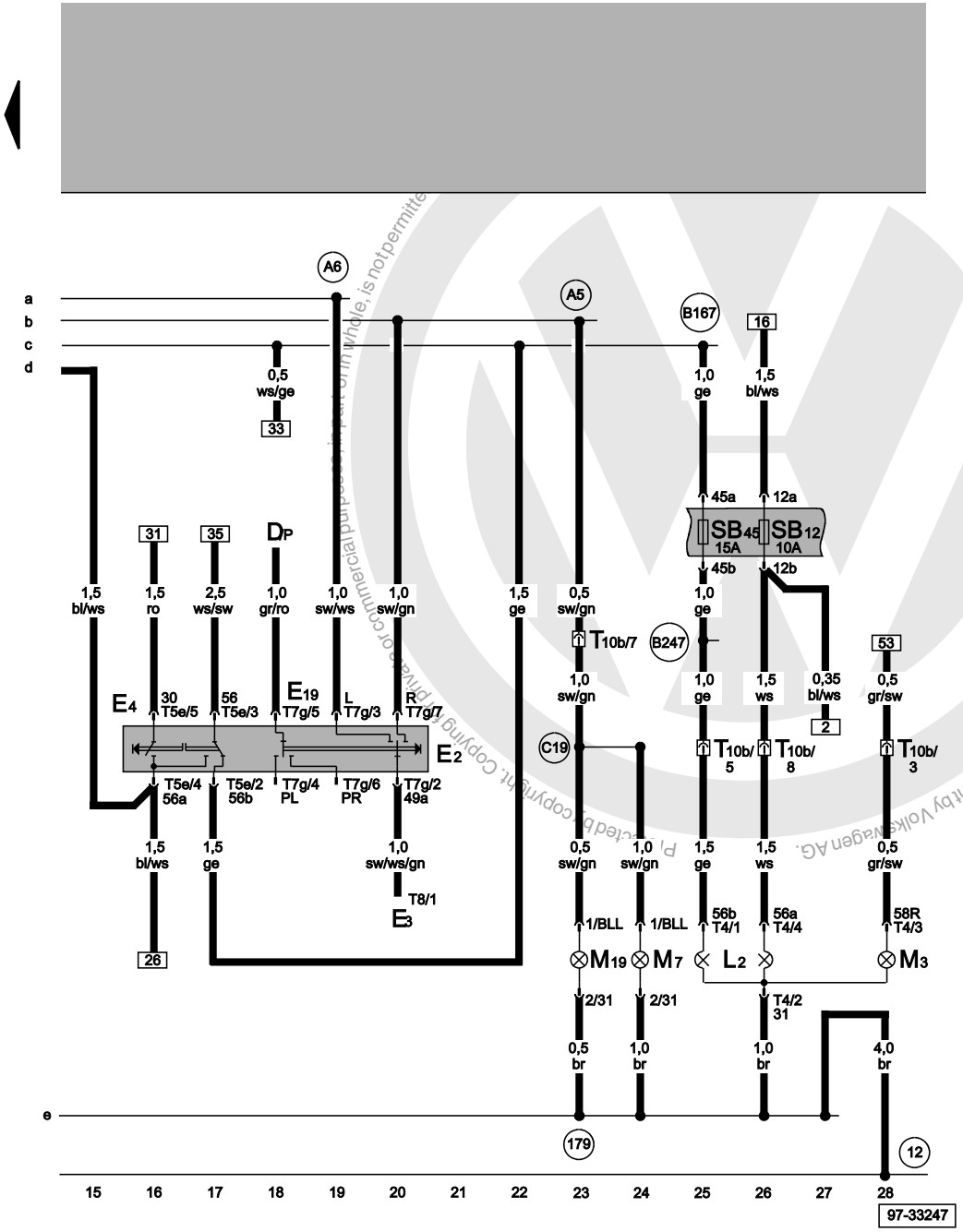

ws = white
sw = black
ro = red
br = brown
gn = green
bl = blue
gr = grey
li = purple
ge = yellow
or = orange
rs = pink

Right headlight, front right turn signal, turn signal switch

D	Ignition/starter switch
E2	Turn signal switch
E3	Hazard warning light switch
E4	Headlight dipper/flasher switch
E19	Parking light switch
L2	Twin filament bulb for headlight, right
M3	Side light bulb, right
M7	Turn signal bulb, front right
M19	Side turn signal bulb, right
T4	4-pin connector, in headlight, right
T5e	5-pin connector
T7g	7-pin connector
T8	8-pin connector
T10b	10-pin connector, white, coupling station under relay carrier, left
SB12	Fuse -12- on fuse box
SB45	Fuse -45- on fuse box
12	Earth point, left in engine compartment
179	Earth connection, in left headlight wiring harness
A5	Positive (+) connection (right turn signal), in dash panel wiring harness
A6	Positive (+) connection (left turn signal), in dash panel wiring harness
B167	Connection (56b), in interior wiring harness
B247	Connection -2- (56b), in interior wiring harness
C19	Connection -1- (turn signal, right), in headlight wiring harness

satelettronica

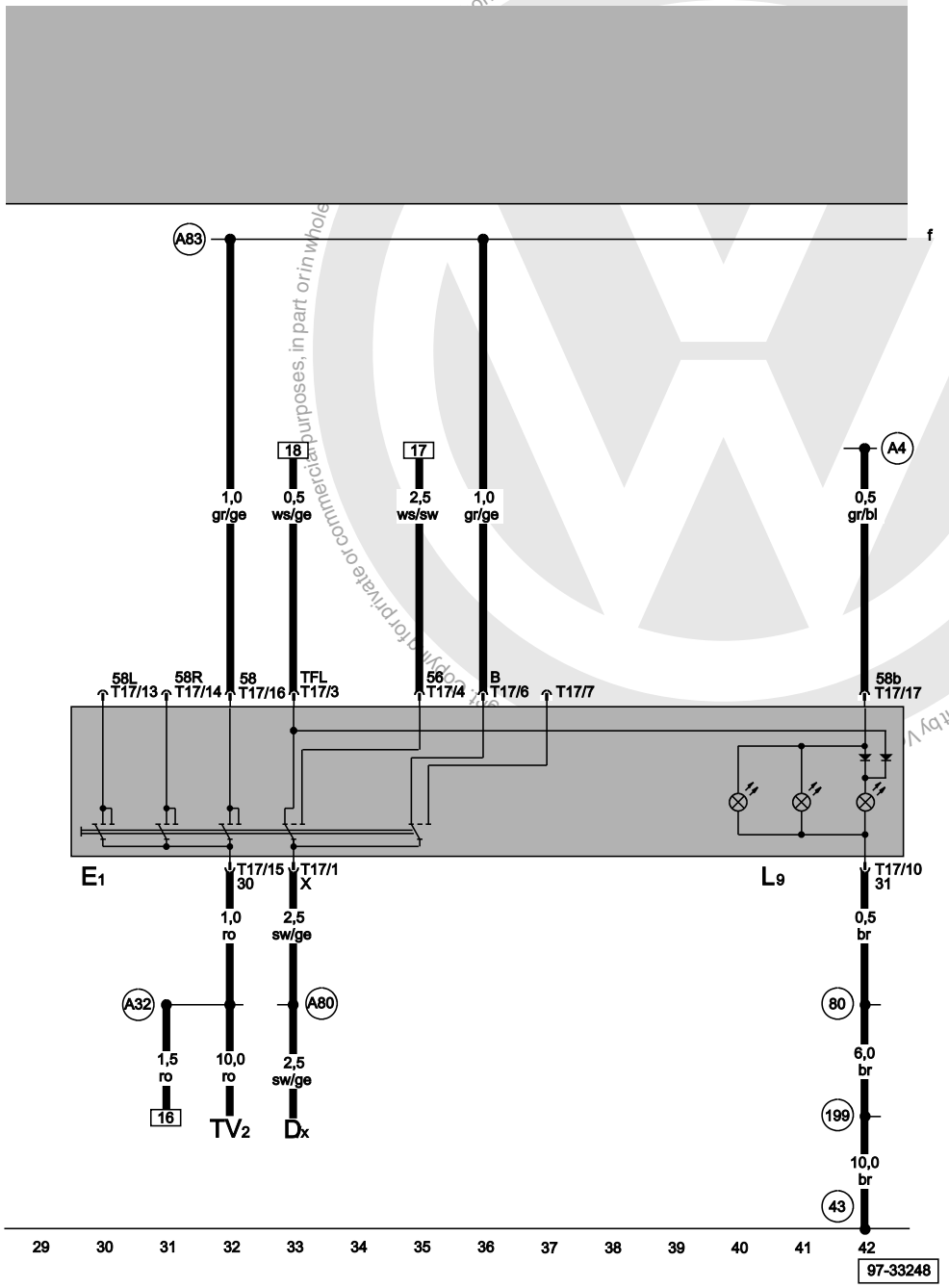

Light switch

D	Ignition/starter switch
E1	Light switch
L9	Light switch light bulb
T17	17-pin connector, connector on light switch
TV2	Terminal 30 junction box
43	Earth point, lower part of right A-pillar
80	Earth connection -1-, in dash panel wiring harness
199	Earth connection -3-, in dash panel wiring harness
A4	Positive (+) connection (58b), in dash panel wiring harness
A32	Positive (+) connection (30), in dash panel wiring harness
A80	Connection -1- (X), in dash panel wiring harness
A83	Connection (daytime driving lights), in dash panel wiring harness

ws	=	white
sw	=	black
ro	=	red
br	=	brown
gn	=	green
bl	=	blue
gr	=	grey
li	=	purple
ge	=	yellow
or	=	orange
rs	=	pink

satelettronica

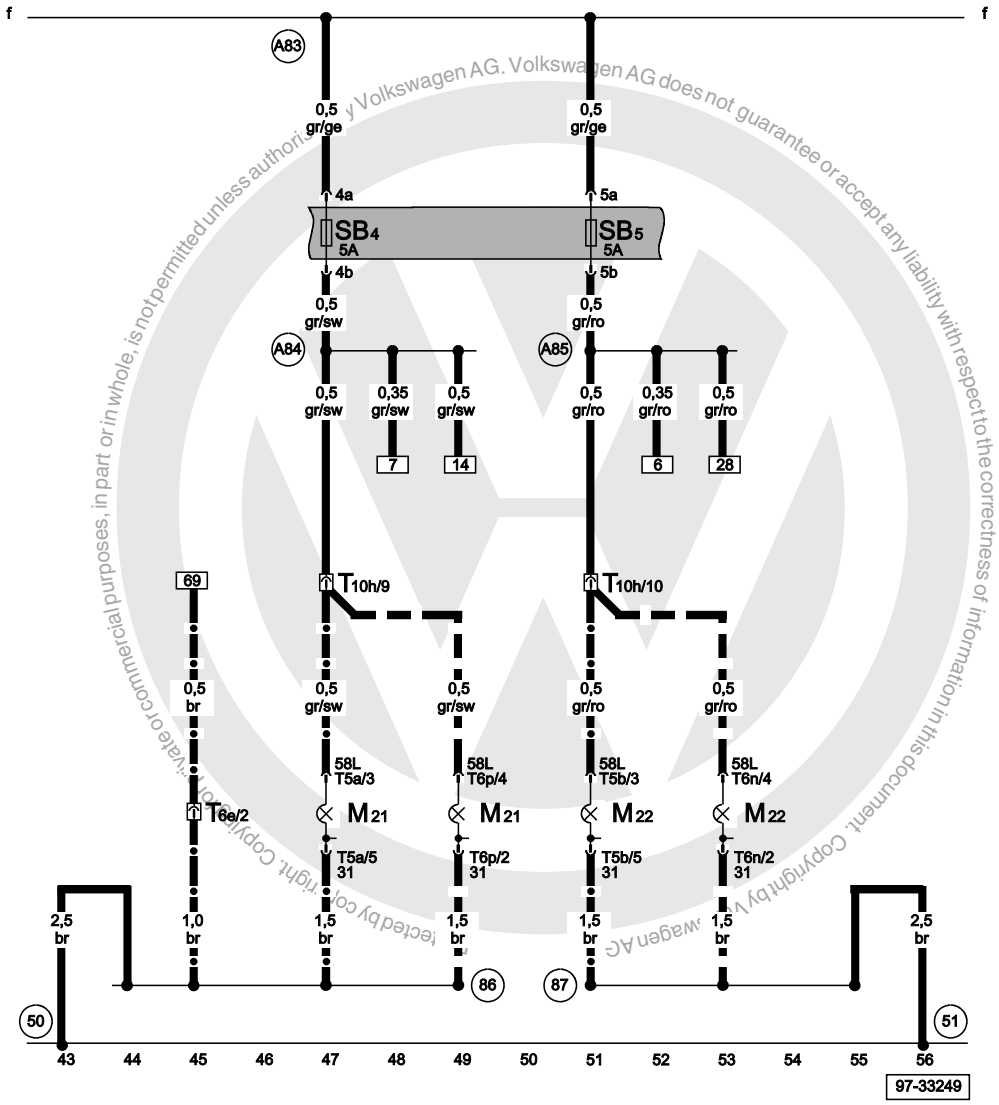

Brake and tail light bulb

M21	Brake and tail light bulb, left
M22	Brake and tail light bulb, right
SB4	Fuse -4- on fuse box
SB5	Fuse -5- on fuse box
T5a	5-pin connector, on left tail light
T5b	5-pin connector, on right tail light
T6e	6-pin connector, on left C-pillar
T6n	6-pin connector, on right tail light
T6p	6-pin connector, on left tail light
T10h	10-pin connector, light green, coupling station under relay carrier, left
50	Earth point, on left luggage compartment
51	Earth point, right luggage compartment
86	Earth connection -1-, in rear wiring harness
87	Earth connection -2-, in rear wiring harness
A83	Connection (daytime driving lights), in dash panel wiring harness
A84	Connection (58L), in dash panel wiring harness
A85	Connection (58R), in dash panel wiring harness

<fo:external-graphic src="/../PDOC/samba/tools/png-convert/out//slp/ft_icons/m_m_m.png" content-width="20pt" scaling="uniform"/>

Only Polo Variant

ws = white

Volkswagen AG. Volkswagen AG does not guarantee or accept any liability with respect to the correctness of information in this document. Copyright by Volkswagen AG. Protected by copyright. Copying for private or commercial purposes, in part or in whole, is not permitted unless authorised by Volkswagen AG.

satelettronica

sw	=	black
ro	=	red
br	=	brown
gn	=	green
bl	=	blue
gr	=	grey
li	=	purple
ge	=	yellow
or	=	orange
rs	=	pink

<fo:external-graphic src="/../PDOC/samba/tools/png-convert/out//slp/ft_icons/m_k_m.png" content-width="20pt" scaling="uniform"/>

Only Polo Classic

Protected by copyright. Copying for private or commercial purposes, in part or in whole, is not permitted unless authorised by Volkswagen AG. Volkswagen AG does not guarantee or accept any liability with respect to the correctness of information in this document. Copyright by Volkswagen AG.

satelettronica

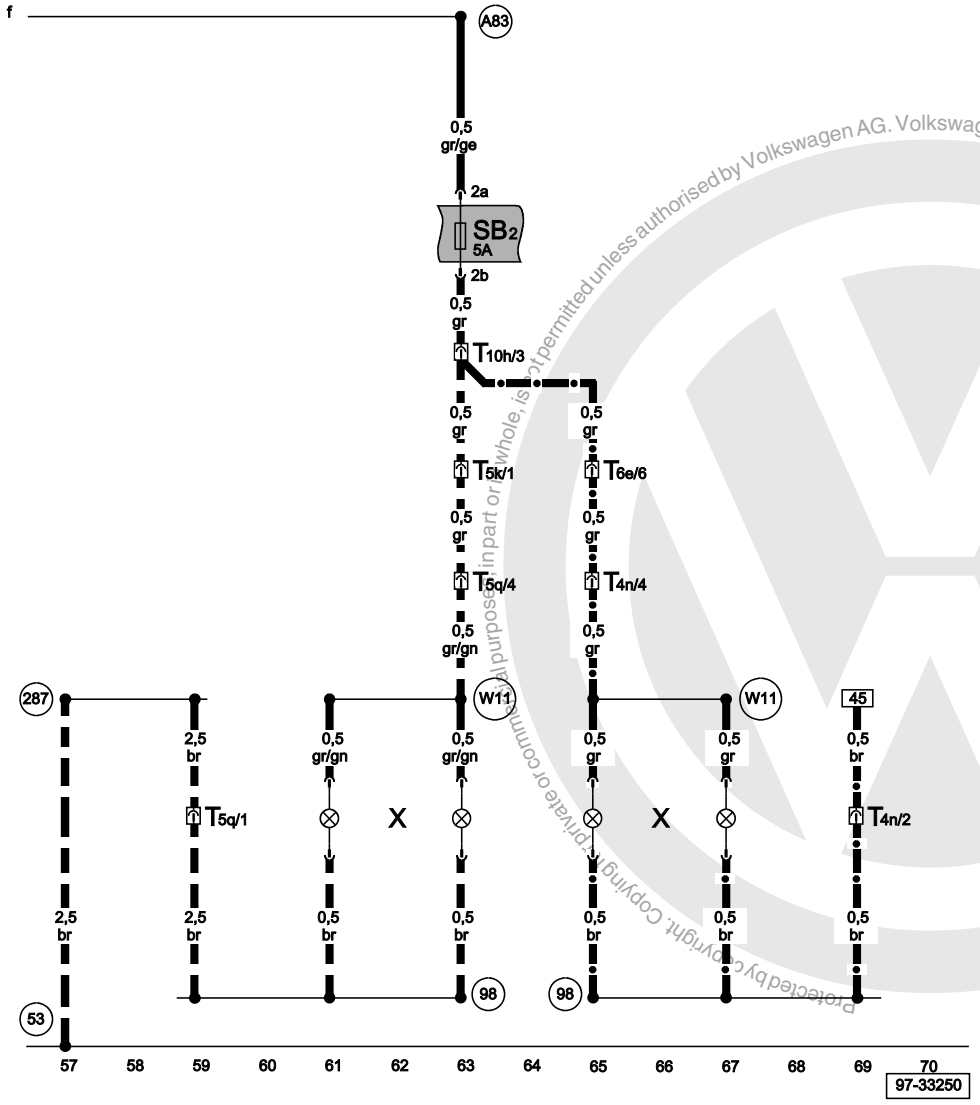

Number plate light

SB2	Fuse -2- on fuse box
T4n	4-pin connector, in tailgate/boot lid
T5k	5-pin connector, on right C-pillar
T5q	5-pin connector, in tailgate/boot lid
T6e	6-pin connector, on left C-pillar
T10h	10-pin connector, light green, coupling station under relay carrier, left
X	Number plate light
53	Earth point, in tailgate/boot lid, right
98	Earth connection, in tailgate/boot lid wiring harness
287	Earth connection, in rear lid prewiring wiring harness
A83	Connection (daytime driving lights), in dash panel wiring harness
W11	Connection (58), in tailgate/boot lid wiring harness

<fo:external-graphic src="/../PDOC/samba/tools/png-convert/out//slp/ft_icons/m_m_m.png" content-width="20pt" scaling="uniform"/> Only Polo Variant

<fo:external-graphic src="/../PDOC/samba/tools/png-convert/out//slp/ Only Polo Classic

ws = white

Protected by copyright. Copying for private or commercial purposes, in part or in whole, is not permitted unless authorised by Volkswagen AG. Volkswagen AG does not guarantee or accept any liability with respect to the correctness of information in this document. Copyright by Volkswagen AG.

satelettronica

sw	=	black	ft_icons/
ro	=	red	m_k_m.p
br	=	brown	ng"
gn	=	green	content-
bl	=	blue	width="2
gr	=	grey	0pt"
li	=	purple	scaling="
ge	=	yellow	uniform"/
or	=	orange	>
rs	=	pink	

Protected by copyright. Copying for private or commercial purposes, in part or in whole, is not permitted unless authorised by Volkswagen AG. Volkswagen AG does not guarantee or accept any liability with respect to the correctness of information in this document. Copyright by Volkswagen AG.

satelettronica

1.4 l/55 kW - 4LV, engine codes APE, AUA

From May 2001

1.4 l/55 kW - 4LV, engine codes APE, From May 2001

For alternatives to relay and fuse positions as well as multi-pin connector wiring - see "Fitting locations" section.

Relay locations on relay plate:

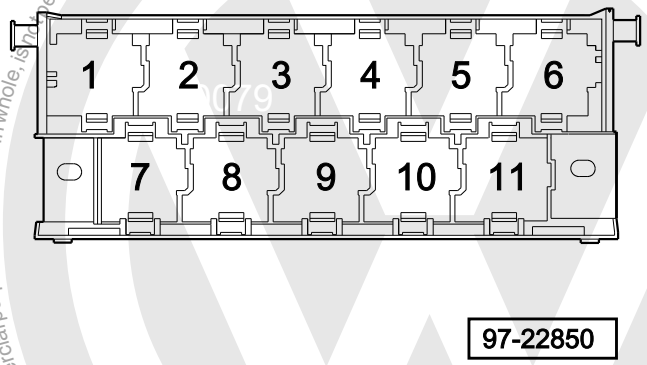

2 - Fuel pump relay (167)
11 - Fuel shut- off control unit (405)

Note:

- *The number in brackets behind the part designation denotes the control number on the housing.*

Fuse colours

30 A - green
25 A - white
20 A - yellow
15 A - blue
10 A - red
7.5 A - brown
5 A - beige
3 A - purple

Protected by copyright. Copying for private or commercial purposes, in part or in whole, is not permitted unless authorised by Volkswagen AG. Volkswagen AG does not guarantee or accept any liability with respect to the correctness of information in this document. Copyright by Volkswagen AG.

satelettronica

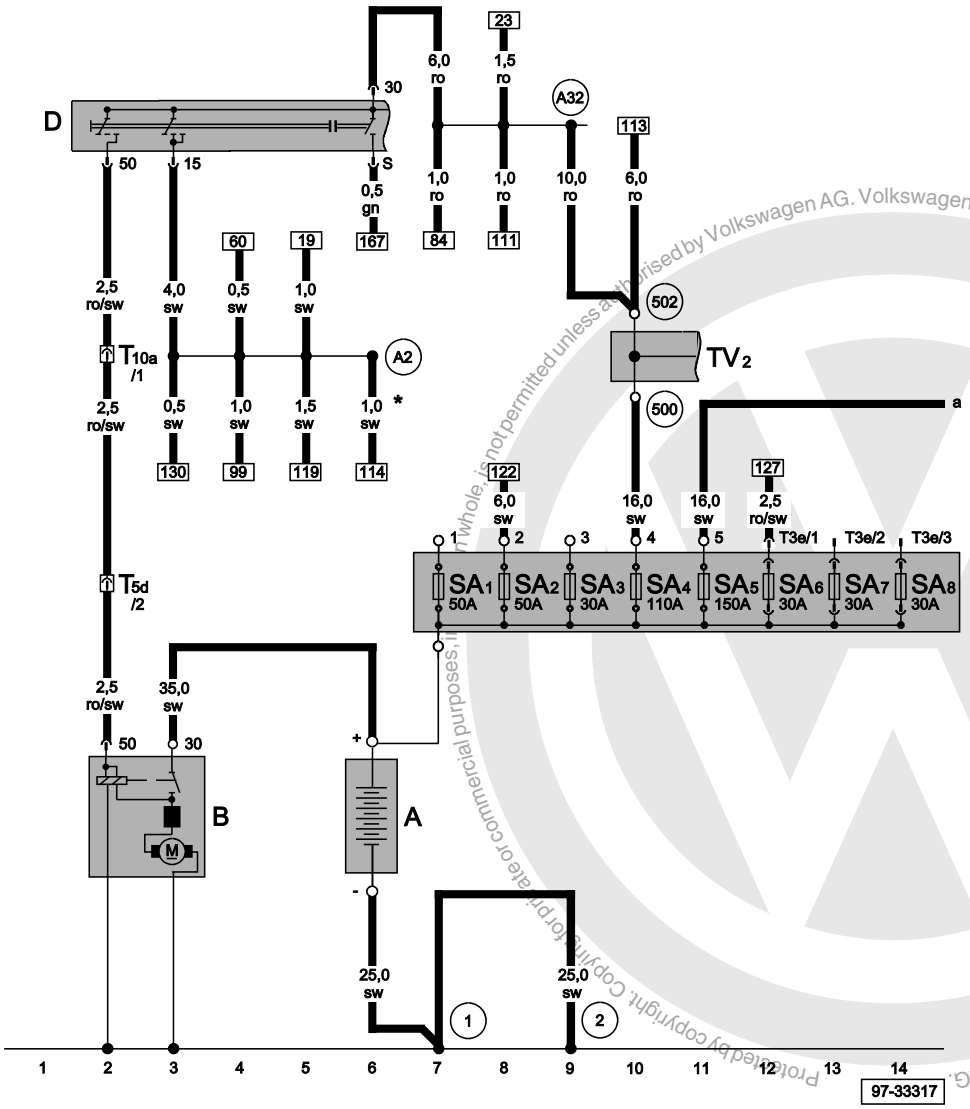

Starter, battery, ignition/starter switch, fuse box / battery

A	Battery
B	Starter
D	Ignition/starter switch
SA1	Fuse -1- on battery fuse box
SA2	Fuse -2- on battery fuse box
SA3	Fuse -3- on battery fuse box
SA4	Fuse -4- on battery fuse box
SA5	Fuse -5- on battery fuse box
SA6	Fuse -6- on battery fuse box
SA7	Fuse -7- on battery fuse box
SA8	Fuse -8- on battery fuse box
T3e	3-pin connector, on battery fuse box
T5d	5-pin connector, in engine compartment, near gearbox
T10a	10-pin connector, black, coupling station under relay carrier, left
TV2	Terminal 30 wiring junction
1	Earth strap, battery - body
2	Earth strap, gearbox - body
500	Screw connection -1- (30), on relay plate
502	Screw connection -1- (30a), on relay plate
A2	Positive (+) connection (15), in dash panel wiring harness
A32	Positive (+) connection (30), in dash panel wiring harness
*	Only models with airbags

ws	=	white
sw	=	black
ro	=	red
br	=	brown
gn	=	green
bl	=	blue
gr	=	grey
li	=	purple
ge	=	yellow
or	=	orange
rs	=	pink

Protected by copyright. Copying for private or commercial purposes, in whole or in part, is not permitted unless authorised by Volkswagen AG. Volkswagen AG does not guarantee or accept any liability with respect to the correctness of information in this document. Copyright by Volkswagen AG.

satelettronica

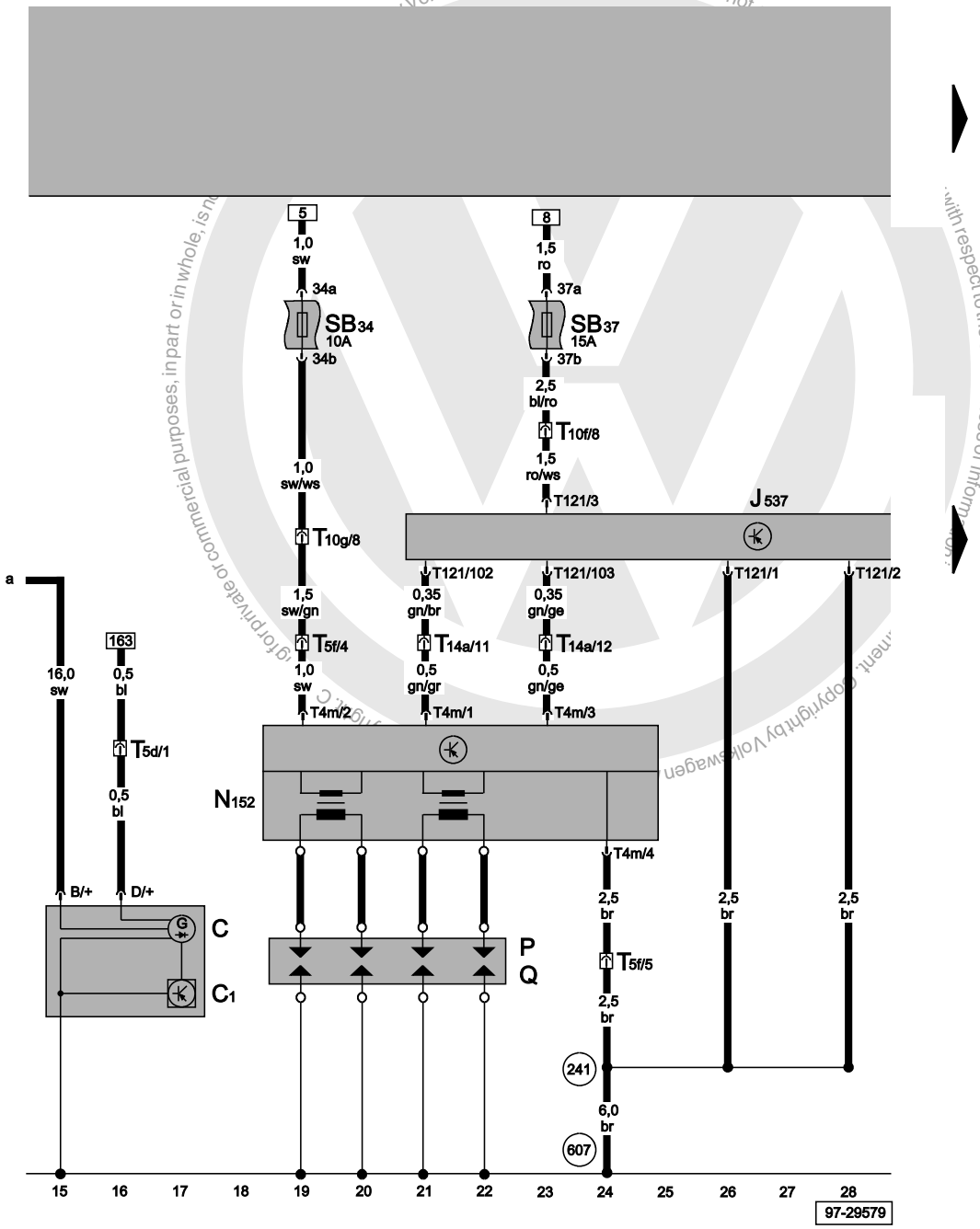

4LV control unit (injection system), alternator, voltage regulator, voltage supply, ignition transformer

C	Alternator
C1	Voltage regulator
J537	4LV control unit (injection system)
N152	Ignition transformer
P	Spark plug connector
Q	Spark plugs
SB34	Fuse -34- on fuse box
SB37	Fuse -37- on fuse box
T4m	4-pin connector, yellow, on ignition transformer
T5d	5-pin connector, in engine compartment, near gearbox
T5f	5-pin connector, in engine compartment
T10f	10-pin connector, purple, coupling station under relay carrier, left
T10g	10-pin connector, red, coupling station under relay carrier, left
T14a	14-pin connector, in engine compartment
T121	121-pin connector
241	Earth connection -2-, engine earth, in engine wiring harness
607	Earth point, on left in plenum chamber

ws	=	white
sw	=	black
ro	=	red
br	=	brown
gn	=	green
bl	=	blue
gr	=	grey
li	=	purple
ge	=	yellow
or	=	orange
rs	=	pink

satelettronica

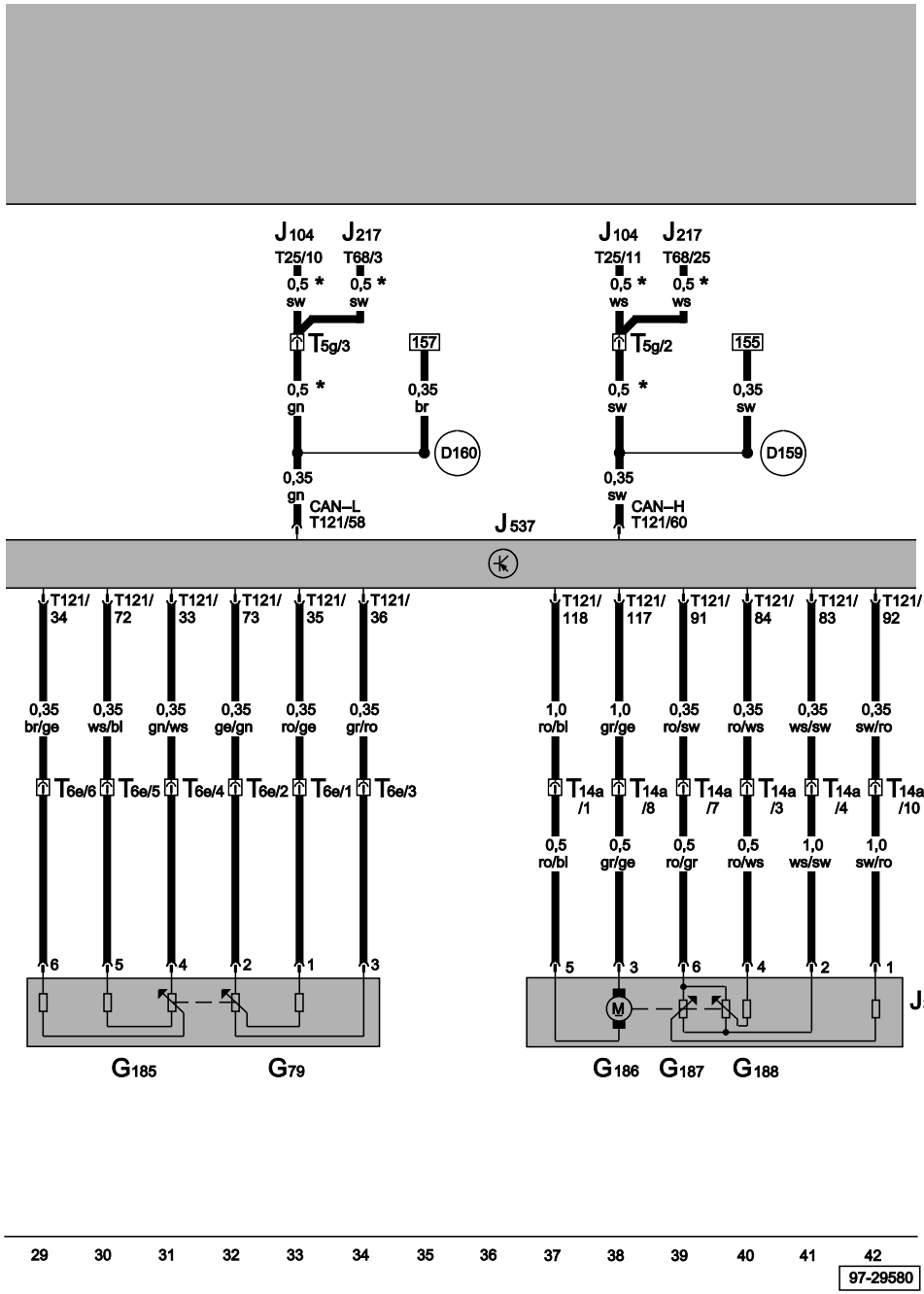

4LV control unit (injection system), accelerator pedal position senders, throttle valve control unit

G79	Accelerator pedal position sender
G185	Accelerator pedal position sender -2-
G186	Throttle valve drive (electric throttle operation)
G187	Throttle valve drive angle sender -1- (electric throttle operation)
G188	Throttle valve drive angle sender -2- (electric throttle operation)
J104	ABS with EDL control unit
J217	Automatic gearbox control unit
J338	Throttle valve control unit
J537	4LV control unit (injection system)
T5g	5-pin connector, pink, coupling station under relay carrier, left
T6e	6-pin connector, near accelerator pedal position sender
T14a	14-pin connector, in engine compartment
T25	25-pin connector
T68	68-pin connector
T121	121-pin connector
D159	Connection (high bus), in interior wiring harness
D160	Connection (low bus), in engine compartment wiring harness
*	Depends on equipment

ws	=	white
sw	=	black
ro	=	red
br	=	brown
gn	=	green
bl	=	blue
gr	=	grey
li	=	purple
ge	=	yellow
or	=	orange
rs	=	pink

Protected by copyright. Copying for private or commercial purposes, in part or in whole, is not permitted unless authorised. Volkswagen AG does not guarantee or accept any liability with respect to the correctness of information in this document. Copyright by Volkswagen AG.
satelettronica

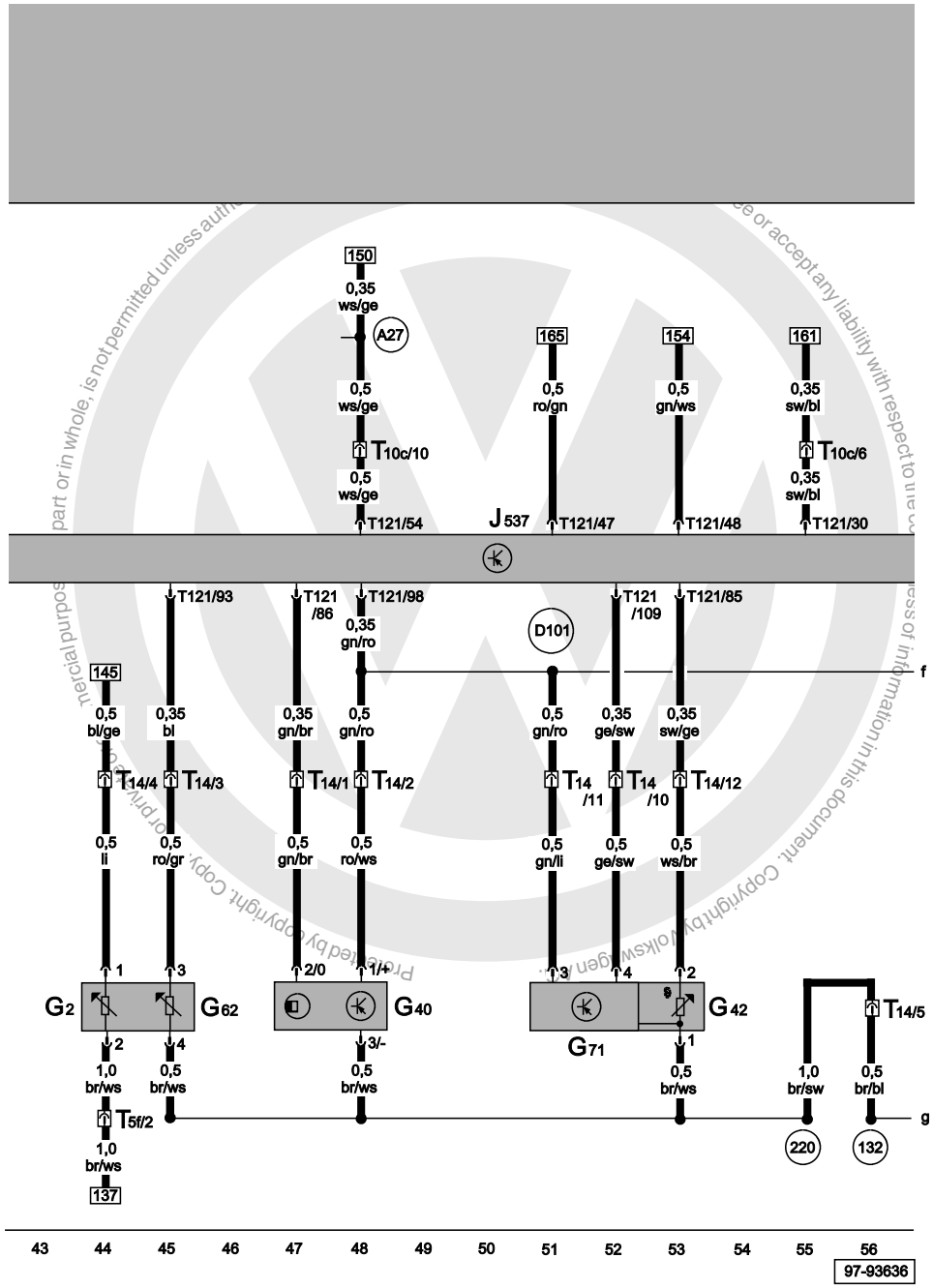

4LV control unit (injection system), coolant temperature sender, intake air temperature sender, intake manifold pressure sender, Hall sender

G2	Coolant temperature sender
G40	Hall sender
G42	Intake air temperature sender
G62	Coolant temperature sender
G71	Intake manifold pressure sender
J537	4LV control unit (injection system)
T5f	5-pin connector, in engine compartment
T10c	10-pin connector, brown, coupling station under relay carrier, left
T14	14-pin connector, in engine compartment
T121	121-pin connector
132	Earth connection -3-, in engine compartment wiring harness
220	Earth connection (sender earth), in engine wiring harness
A27	Connection (speed signal), in dash panel wiring harness
D101	Connection -1-, in engine compartment wiring harness

ws	=	white
sw	=	black
ro	=	red
br	=	brown
gn	=	green
bl	=	blue
gr	=	grey
li	=	purple
ge	=	yellow
or	=	orange
rs	=	pink

satelettronica

4LV control unit (injection system), engine speed sender, knock sensor I, exhaust gas recirculation frequency valve

G28	Engine speed sender
G61	Knock sensor I
G212	Exhaust gas recirculation potentiometer
J537	4LV control unit (injection system)
N121	Exhaust gas recirculation frequency valve
SB30	Fuse -30- on fuse box
T2h	2-pin connector, near knock sensor I
T3d	3-pin connector, near engine speed sender
T10e	10-pin connector, green, coupling station under relay carrier, left
T14	14-pin connector, in engine compartment
T121	121-pin connector
132	Earth connection -3-, in engine compartment wiring harness
A20	Connection (15a), in dash panel wiring harness
D101	Connection -1-, in engine compartment wiring harness

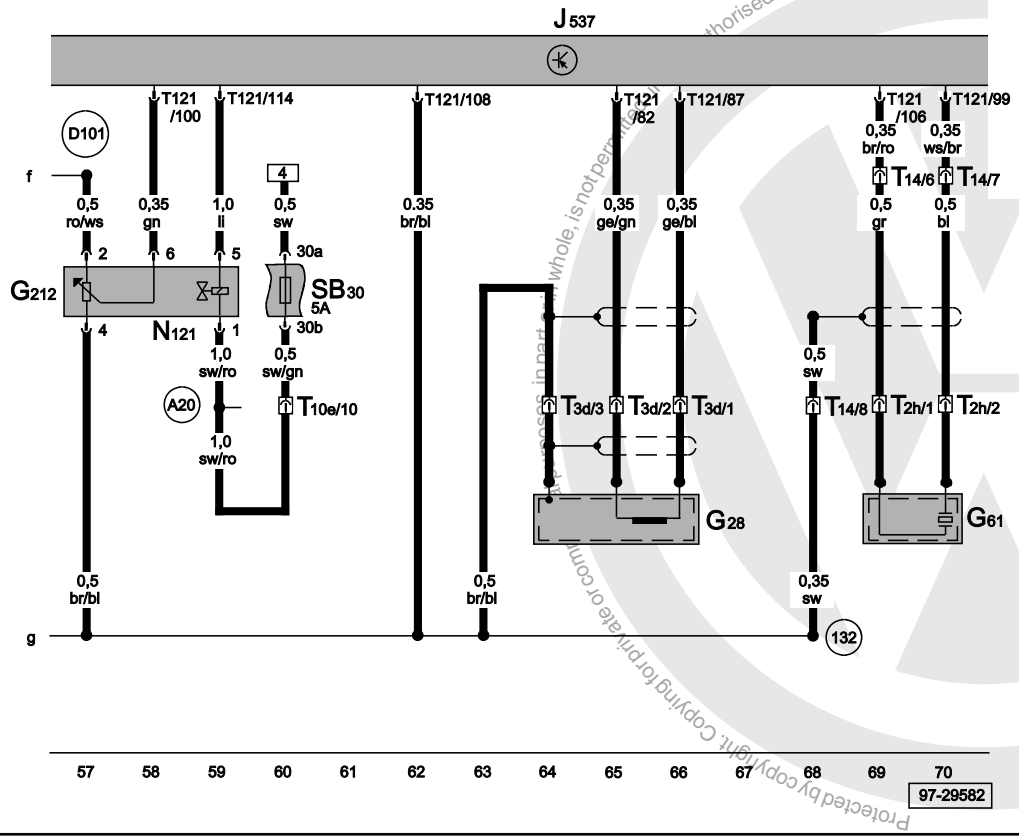

ws	=	white
sw	=	black
ro	=	red
br	=	brown
gn	=	green
bl	=	blue
gr	=	grey
li	=	purple
ge	=	yellow
or	=	orange
rs	=	pink

Protected by copyright. Copying for private or commercial purposes, in part or in whole, is not permitted unless authorised by Volkswagen AG. Volkswagen AG does not guarantee or accept any liability with respect to the correctness of information in this document. Copyright by Volkswagen AG.

satelettronica

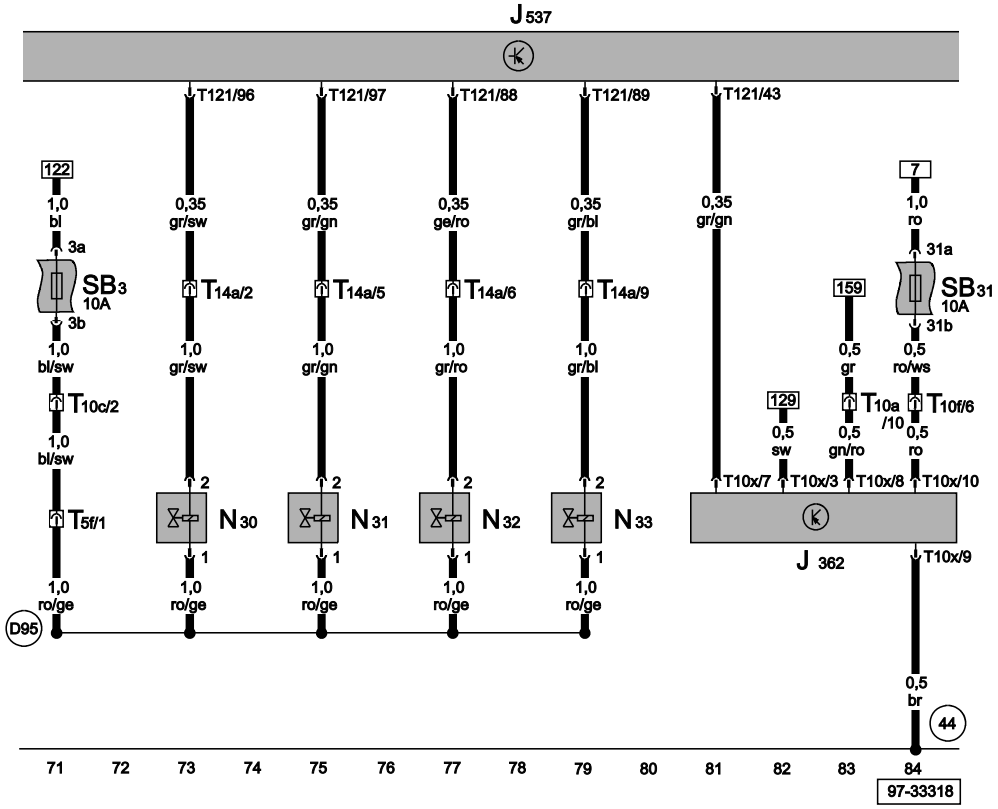

4LV control unit (injection system), injectors, immobilizer control unit

J362	Immobilizer control unit
J537	4LV control unit (injection system)
N30	Injector, cylinder 1
N31	Injector, cylinder 2
N32	Injector, cylinder 3
N33	Injector, cylinder 4
SB3	Fuse -3- on fuse box
SB31	Fuse -31- on fuse box
T5f	5-pin connector, in engine compartment
T10a	10-pin connector, black, coupling station under relay carrier, left
T10c	10-pin connector, brown, coupling station under relay carrier, left
T10f	10-pin connector, purple, coupling station under relay carrier, left
T10x	10-pin connector, on immobilizer control unit
T14a	14-pin connector, in engine compartment
T121	121-pin connector
44	Earth point, lower part of left A-pillar
D95	Connection (injectors), in engine compartment wiring harness

ws	=	white
sw	=	black
ro	=	red
br	=	brown
gn	=	green
bl	=	blue
gr	=	grey
li	=	purple
ge	=	yellow
or	=	orange
rs	=	pink

Protected by copyright. Copying for private or commercial purposes, in part or in whole, is not permitted unless authorised by Volkswagen AG. Volkswagen AG does not guarantee or accept any liability with respect to the correctness of information in this document. Copyright by Volkswagen AG.
satelettronica

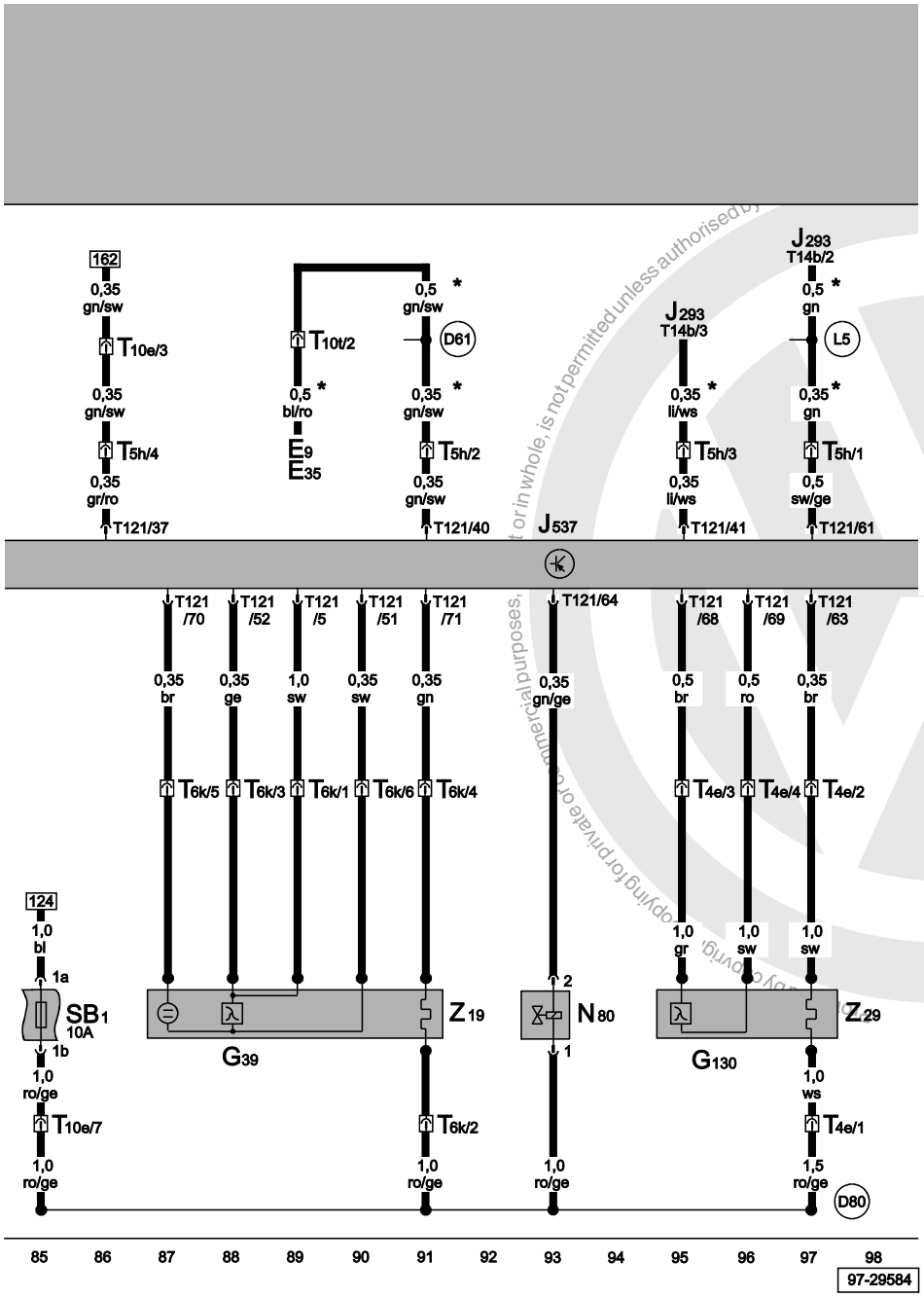

4LV control unit (injection system), lambda probe, lambda probe after catalyst, activated charcoal filter system solenoid valve 1

E9	Fresh air blower switch
E35	Air conditioner switch
G39	Lambda probe
G130	Lambda probe after catalyst
J293	Radiator fan control unit
J537	4LV control unit (injection system)
N80	Activated charcoal filter system solenoid valve 1 (pulsed)
SB1	Fuse -1- on fuse box
T4e	4-pin connector, near lambda probe
T5h	5-pin connector, brown, coupling station under relay carrier, left
T6k	6-pin connector, near lambda probe
T10e	10-pin connector, green, coupling station under relay carrier, left
T10t	10-pin connector, coupling station under relay carrier, left
T14b	14-pin connector, on radiator fan control unit
T121	121-pin connector
Z19	Lambda probe heater
Z29	Lambda probe 1 heater, after catalyst
D61	Connection (air conditioner), in engine compartment wiring harness
D80	Positive (+) connection (87a - for activated charcoal filter system solenoid valve), in engine compartment wiring harness
L5	Connection -1-, in air conditioner wiring harness
*	Only models with air conditioner

ws	=	white
sw	=	black
ro	=	red
br	=	brown
gn	=	green
bl	=	blue
gr	=	grey
li	=	purple
ge	=	yellow
or	=	orange
rs	=	pink

satelettronica

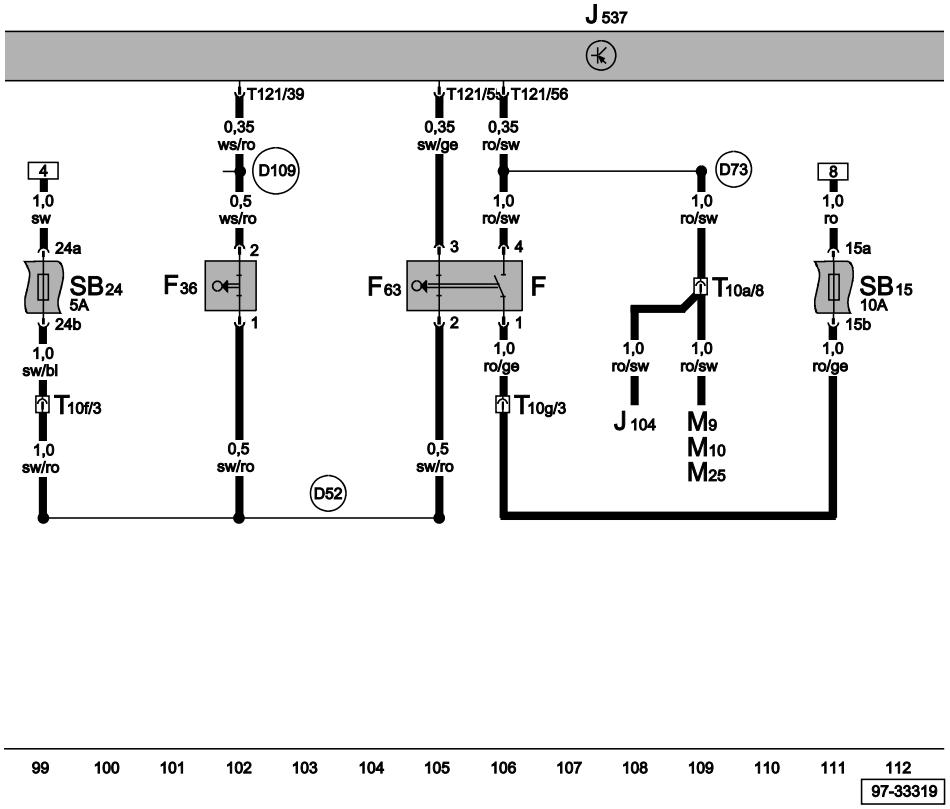

4LV control unit (injection system), brake light switch, clutch pedal switch, brake pedal switch

F	Brake light switch
F36	Clutch pedal switch
F63	Brake pedal switch
J104	ABS with EDL control unit
J537	4LV control unit (injection system)
M9	Brake light bulb, left
M10	Brake light bulb, right
M25	High level brake light bulb
SB15	Fuse -15- on fuse box
SB24	Fuse -24- on fuse box
T10a	10-pin connector, black, coupling station under relay carrier, left
T10f	10-pin connector, purple, coupling station under relay carrier, left
T10g	10-pin connector, red, coupling station under relay carrier, left
T121	121-pin connector
D52	Positive (+) connection (15a), in engine compartment wiring harness
D73	Positive (+) connection (54), in engine compartment wiring harness
D106	Connection -4-, in engine compartment wiring harness
D109	Connection -7-, in engine compartment wiring harness

ws	=	white
sw	=	black
ro	=	red
br	=	brown
gn	=	green
bl	=	blue
gr	=	grey
li	=	purple
ge	=	yellow
or	=	orange
rs	=	pink

Protected by copyright. Copying for private or commercial purposes, in part or in whole, is not permitted unless authorised by Volkswagen AG. Volkswagen AG does not guarantee or accept any liability with respect to the correctness of information in this document. Copyright by Volkswagen AG.
satelettronica

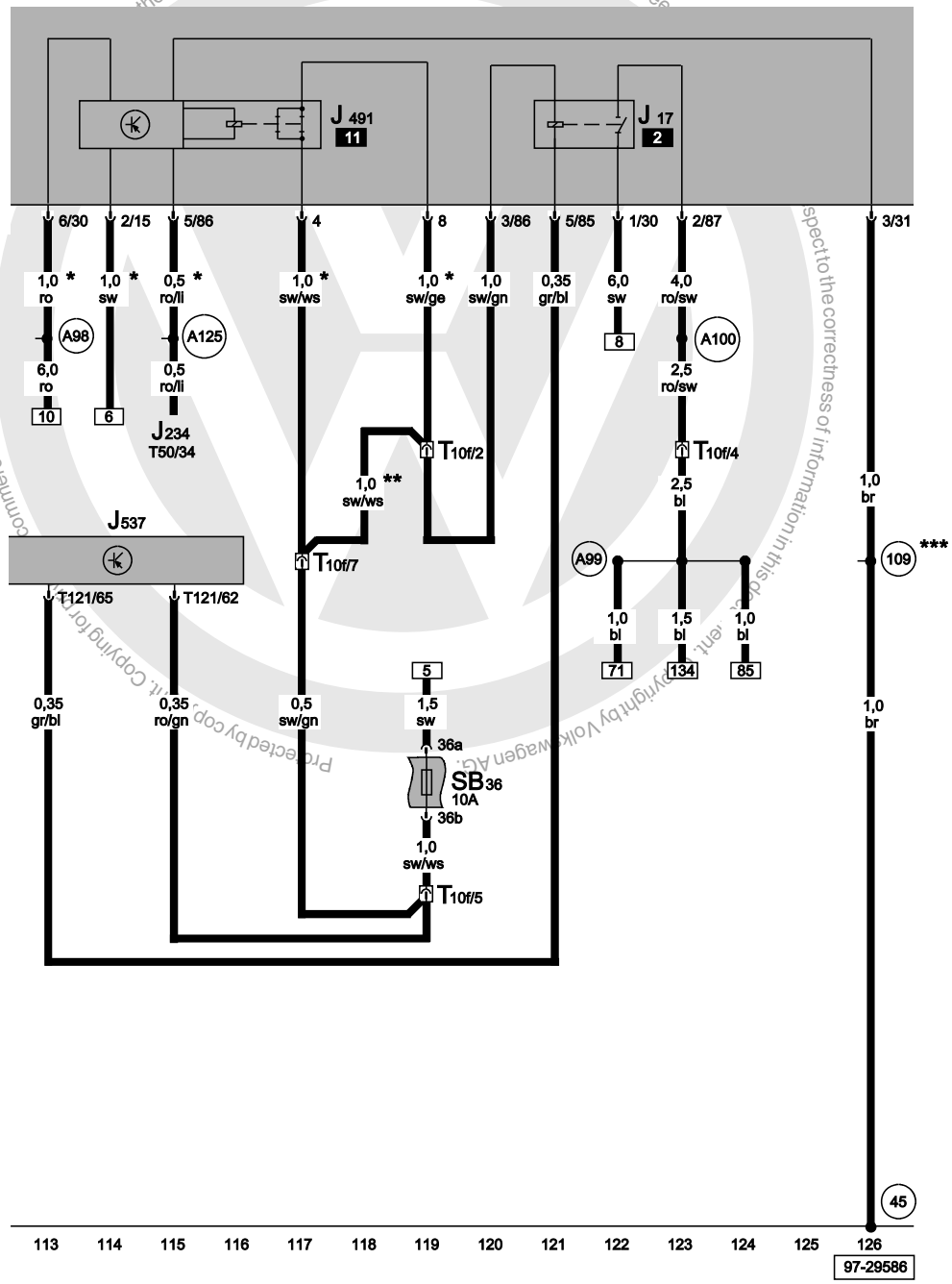

4LV control unit (injection system), fuel pump relay, fuel shut-off control unit (crash)

J17	Fuel pump relay
J234	Airbag control unit
J491	Fuel shut-off control unit (crash)
J537	4LV control unit (injection system)
SB36	Fuse -36- on fuse box
T10f	10-pin connector, purple, coupling station under relay carrier, left
T50	50-pin connector, on airbag control unit
T121	121-pin connector, on Motronic control unit
45	Earth point, behind dash panel - centre
109	Earth connection, in airbag wiring harness
A98	Positive (+) connection -4- (30), in dash panel wiring harness
A99	Connection -1- (87), in dash panel wiring harness
A100	Connection -2- (87), in dash panel wiring harness
A125	Connection (crash signal), in dash panel wiring harness
*	Only models with airbags
**	Only models without airbags
***	Does not apply to models with driver airbag , without window lifter

ws	=	white
sw	=	black
ro	=	red
br	=	brown
gn	=	green
bl	=	blue
gr	=	grey
li	=	purple
ge	=	yellow
or	=	orange
rs	=	pink

satelettronica

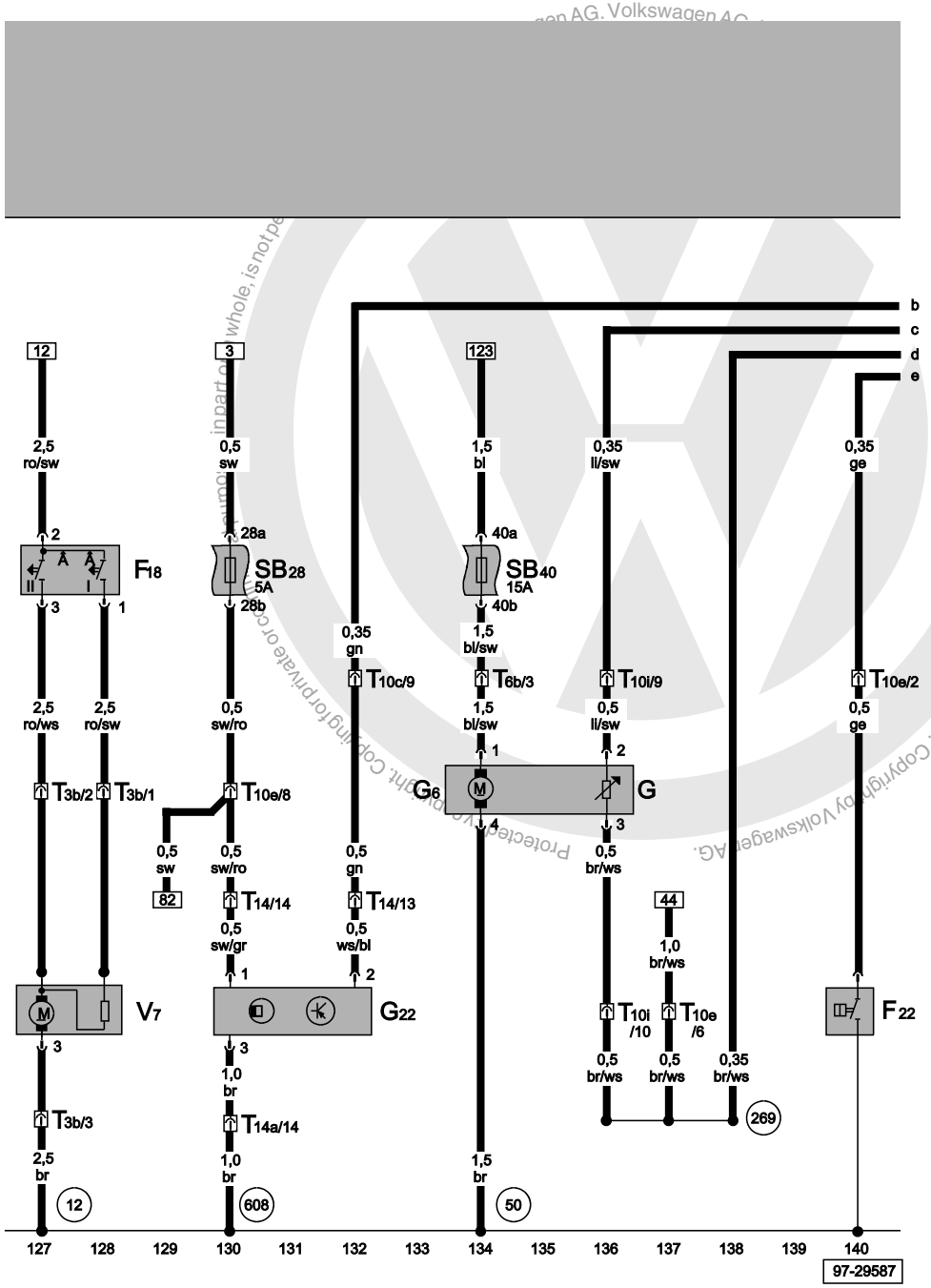

Oil pressure switch, fuel pump, speedometer sender, radiator fan thermo-switch, radiator fan, fuel gauge sender

F18	Radiator fan thermo-switch
F22	Oil pressure switch (0,3 bar)
G	Fuel gauge sender
G6	Fuel pump (pre-supply pump)
G22	Speedometer sender (Hall sender, on gearbox)
SB28	Fuse -28- on fuse box
SB40	Fuse -40- on fuse box
T3b	3-pin connector, on radiator fan
T6b	6-pin connector, grey, coupling station under relay carrier, left
T10c	10-pin connector, brown, coupling station under relay carrier, left
T10e	10-pin connector, green, coupling station under relay carrier, left
T10i	10-pin connector, orange, coupling station under relay carrier, left
T14	14-pin connector, in engine compartment
T14a	14-pin connector, in engine compartment
V7	Radiator fan
12	Earth point, left in engine compartment
50	Earth point, on left luggage compartment
269	Earth connection (sender earth) -1-, in dash panel wiring harness
608	Earth point, in centre of plenum chamber

ws	=	white
sw	=	black
ro	=	red
br	=	brown
gn	=	green
bl	=	blue
gr	=	grey
li	=	purple
ge	=	yellow
or	=	orange
rs	=	pink

satelettronica

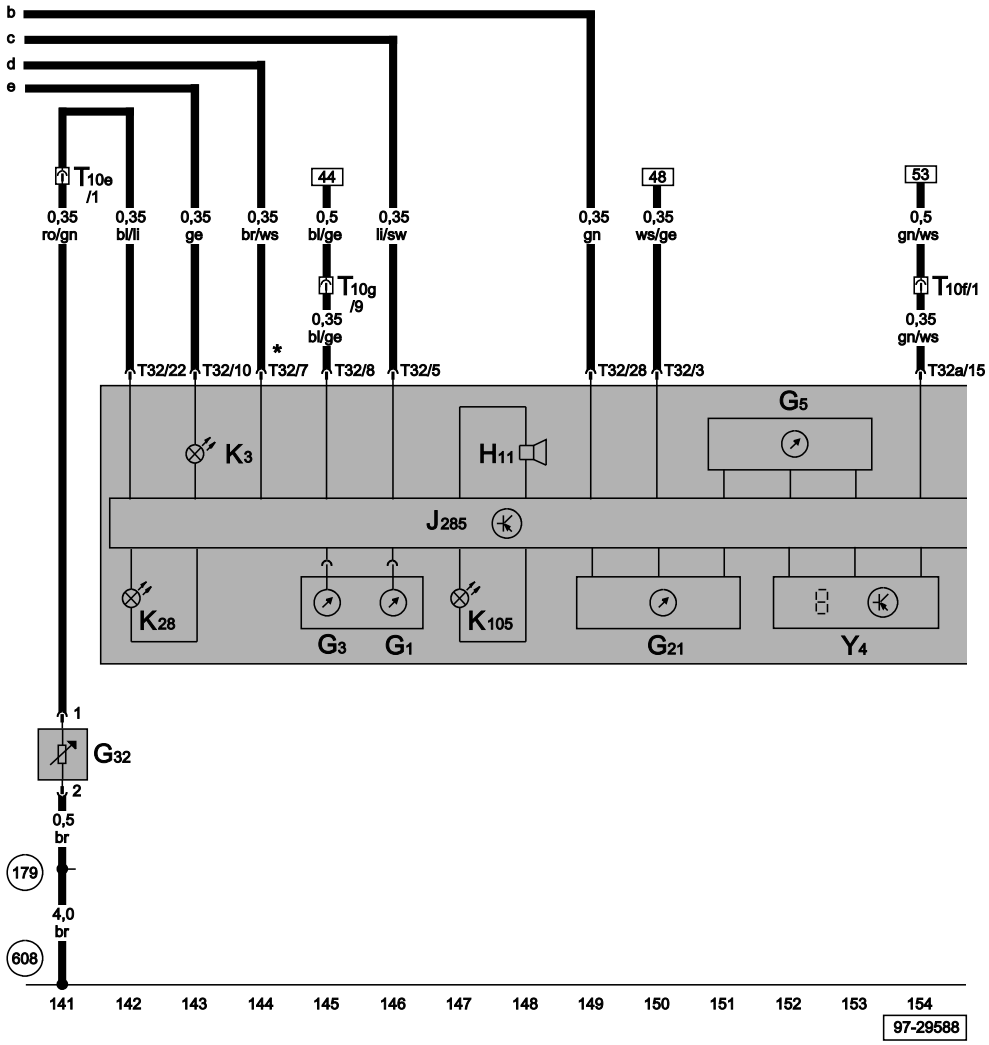

Control unit with display in dash panel insert, coolant shortage indicator sender, oil pressure warning lamp, speedometer, odometer display

G1	Fuel gauge
G3	Coolant temperature gauge
G5	Rev. counter
G21	Speedometer
G32	Coolant shortage indicator sender
H11	Oil pressure warning buzzer
J285	Control unit with display in dash panel insert
K3	Oil pressure warning lamp
K28	Coolant temperature/coolant shortage warning lamp
K105	Reserve fuel warning lamp
T10e	10-pin connector, green, coupling station under relay carrier, left
T10f	10-pin connector, purple, coupling station under relay carrier, left
T10g	10-pin connector, red, coupling station under relay carrier, left
T32	32-pin connector, blue, on dash panel insert
T32a	32-pin connector, green, on dash panel insert
Y4	Odometer display
179	Earth connection, in left headlight wiring harness
608	Earth point, in centre of plenum chamber
*	Output for signal earth

ws	=	white
sw	=	black
ro	=	red
br	=	brown
gn	=	green
bl	=	blue
gr	=	grey
li	=	purple
ge	=	yellow
or	=	orange
rs	=	pink

Protected by copyright. Copying for private or commercial purposes, in part or in whole, is not permitted unless authorised by Volkswagen AG. Volkswagen AG does not guarantee or accept any liability with respect to the correctness of information in this document. Copyright by Volkswagen AG.
satelettronica

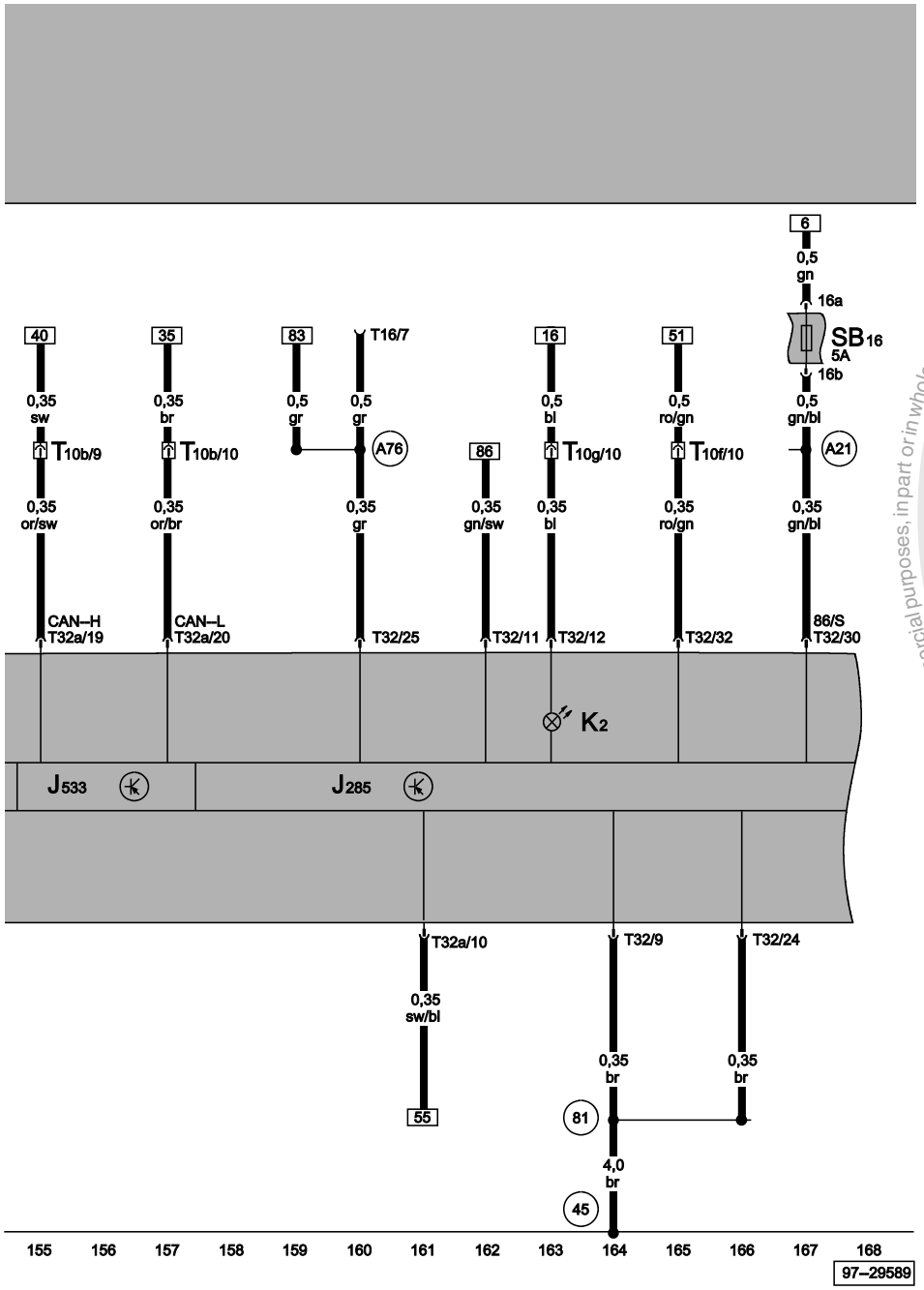

Control unit with display in dash panel insert, diagnostic connector, alternator warning lamp, data bus diagnostic interface

J285	Control unit with display in dash panel insert
J533	Data bus diagnostic interface
K2	Alternator warning lamp
SB16	Fuse -16- on fuse box
T10b	10-pin connector, white, coupling station under relay carrier, left
T10f	10-pin connector, purple, coupling station under relay carrier, left
T10g	10-pin connector, red, coupling station under relay carrier, left
T16	16-pin connector, diagnostic connector
T32	32-pin connector, blue, on dash panel insert
T32a	32-pin connector, green, on dash panel insert
45	Earth point, behind dash panel - centre
81	Earth connection -1-, in dash panel wiring harness
A21	Connection (86s), in dash panel wiring harness
A76	Connection (diagnosis wire K), in dash panel wiring harness

ws	=	white
sw	=	black
ro	=	red
br	=	brown
gn	=	green
bl	=	blue
gr	=	grey
li = purple
ge = yellow
or = orange
rs = pink

Protected by copyright. Copying for private or commercial purposes, in part or in whole, is not permitted unless authorised by Volkswagen AG. Volkswagen AG does not guarantee or accept any liability with respect to the correctness of information in this document. Copyright by Volkswagen AG.
satelettronica

1.4 l/44 kW Motronic, engine codes AUD

From May 2001

For alternatives to relay and fuse positions as well as multi-pin connector wiring - see "Fitting locations" section.

Relay locations on relay plate:

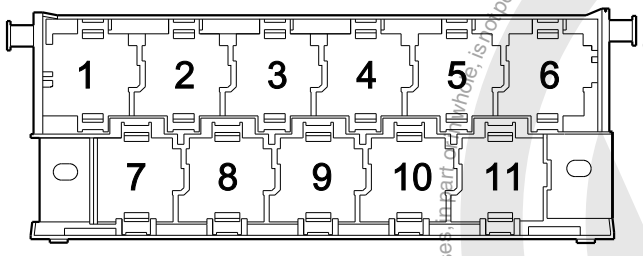

97-22850

2 - Fuel pump relay (167)
11 - Fuel shut- off control unit (405)

Note:

- *The number in brackets behind the part designation denotes the control number on the housing.*

Fuse colours

30 A - green
25 A - white
20 A - yellow
15 A - blue
10 A - red
7.5 A - brown
5 A - beige
3 A - purple

Protected by copyright. Copying for private or commercial purposes, in part or in whole, is not permitted unless authorised by Volkswagen AG. Volkswagen AG does not guarantee or accept any liability with respect to the correctness of information in this document. Copyright by Volkswagen AG.

satelettronica

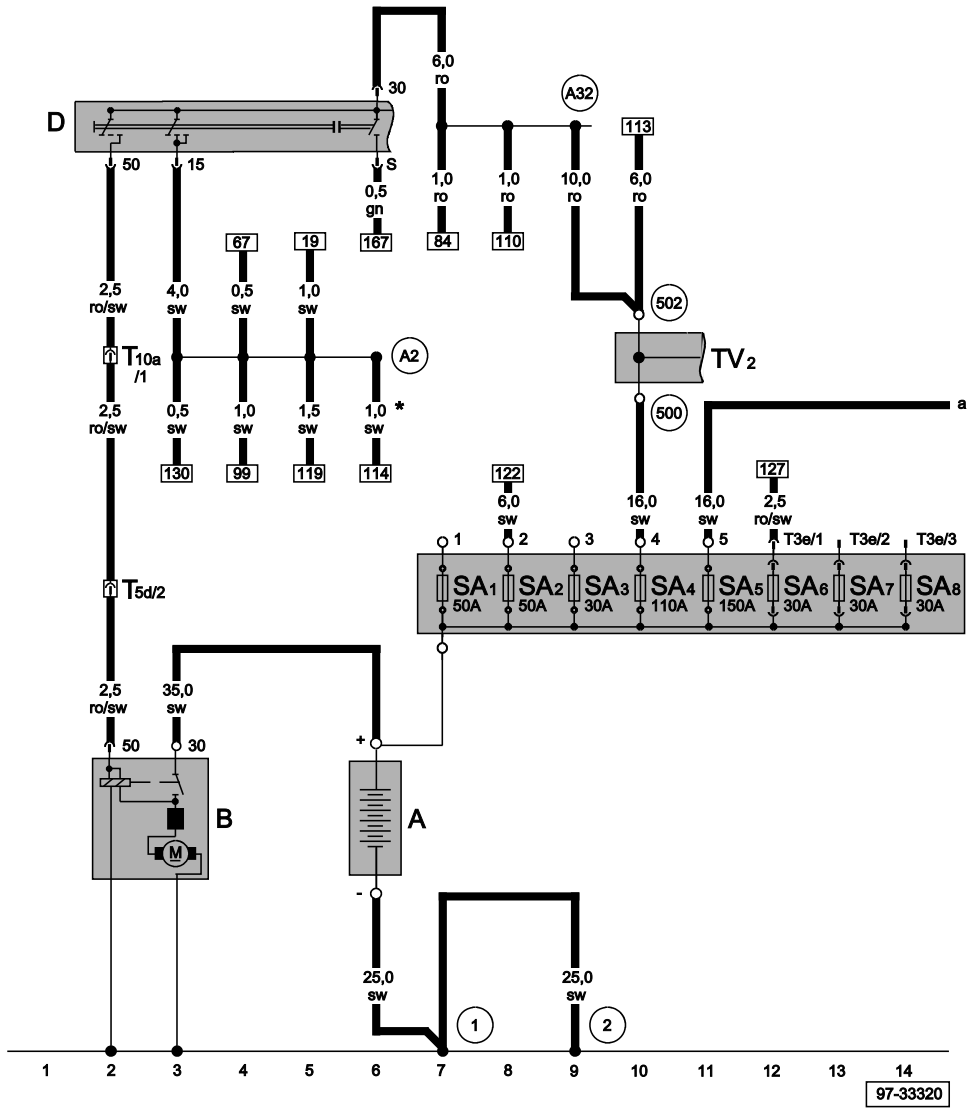

Starter, battery, ignition/starter switch, fuse box / battery

A	Battery
B	Starter
D	Ignition/starter switch
SA1	Fuse -1- on battery fuse box
SA2	Fuse -2- on battery fuse box
SA3	Fuse -3- on battery fuse box
SA4	Fuse -4- on battery fuse box
SA5	Fuse -5- on battery fuse box
SA6	Fuse -6- on battery fuse box
SA7	Fuse -7- on battery fuse box
SA8	Fuse -8- on battery fuse box
T3e	3-pin connector, on battery fuse box
T5d	5-pin connector, in engine compartment, near gearbox
T10a	10-pin connector, black, coupling station under relay carrier, left
TV2	Terminal 30 wiring junction
1	Earth strap, battery - body
2	Earth strap, gearbox - body
500	Screw connection -1- (30), on relay plate
502	Screw connection -1- (30a), on relay plate
A2	Positive (+) connection (15), in dash panel wiring harness
A32	Positive (+) connection (30), in dash panel wiring harness
*	Only models with airbags

ws	=	white
sw	=	black
ro	=	red
br	=	brown
gn	=	green
bl	=	blue
gr	=	grey
li	=	purple
ge	=	yellow
or	=	orange
rs	=	pink

Protected by copyright. Copying for private or commercial purposes, in part or in whole, is not permitted unless authorised by Volkswagen AG. Volkswagen AG does not guarantee or accept any liability with respect to the correctness of information in this document. Copyright by Volkswagen AG.
satelettronica

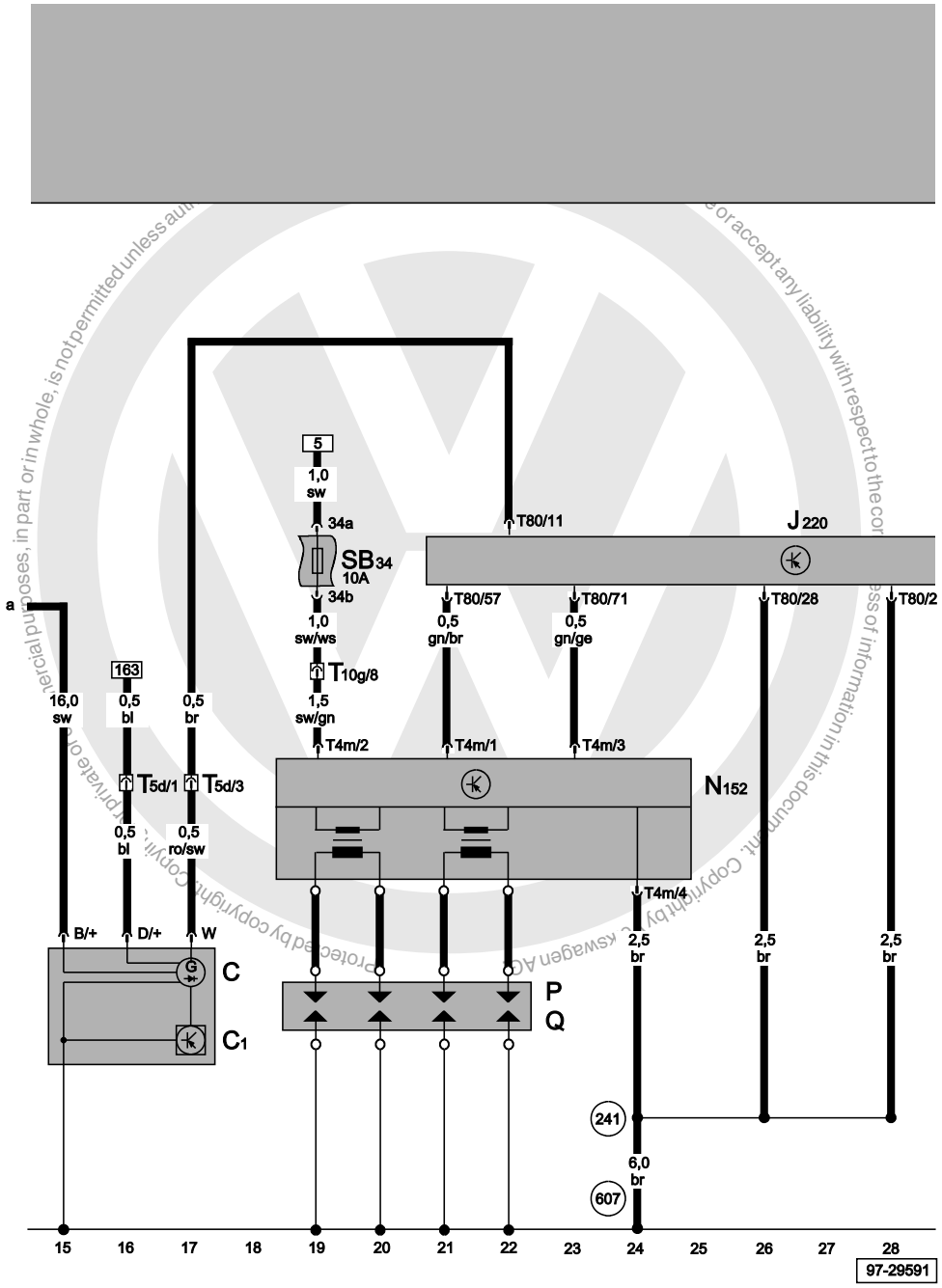

Motronic control unit, alternator, ignition transformer

C	Alternator
C1	Voltage regulator
J220	Motronic control unit
N152	Ignition transformer
P	Spark plug connector
Q	Spark plugs
SB34	Fuse -34- on fuse box
T4m	4-pin connector, yellow, on ignition transformer
T5d	5-pin connector, in engine compartment, near gearbox
T10g	10-pin connector, red, coupling station under relay carrier, left
T80	80-pin connector
241	Earth connection -2-, engine earth, in engine wiring harness
607	Earth point, on left in plenum chamber

ws	=	white
sw	=	black
ro	=	red
br	=	brown
gn	=	green
bl	=	blue
gr	=	grey
li	=	purple
ge	=	yellow
or	=	orange
rs	=	pink

satelettronica

Motronic control unit, accelerator pedal position senders, throttle valve control unit

G79	Accelerator pedal position sender
G185	Accelerator pedal position sender -2-
G186	Throttle valve drive (electric throttle operation)
G187	Throttle valve drive angle sender -1- (electric throttle operation)
G188	Throttle valve drive angle sender -2- (electric throttle operation)
J338	Throttle valve control unit
J220	Motronic control unit
T6e	6-pin connector, near accelerator pedal position sender
T14	14-pin connector, in engine compartment
T14a	14-pin connector, in engine compartment
T80	80-pin connector

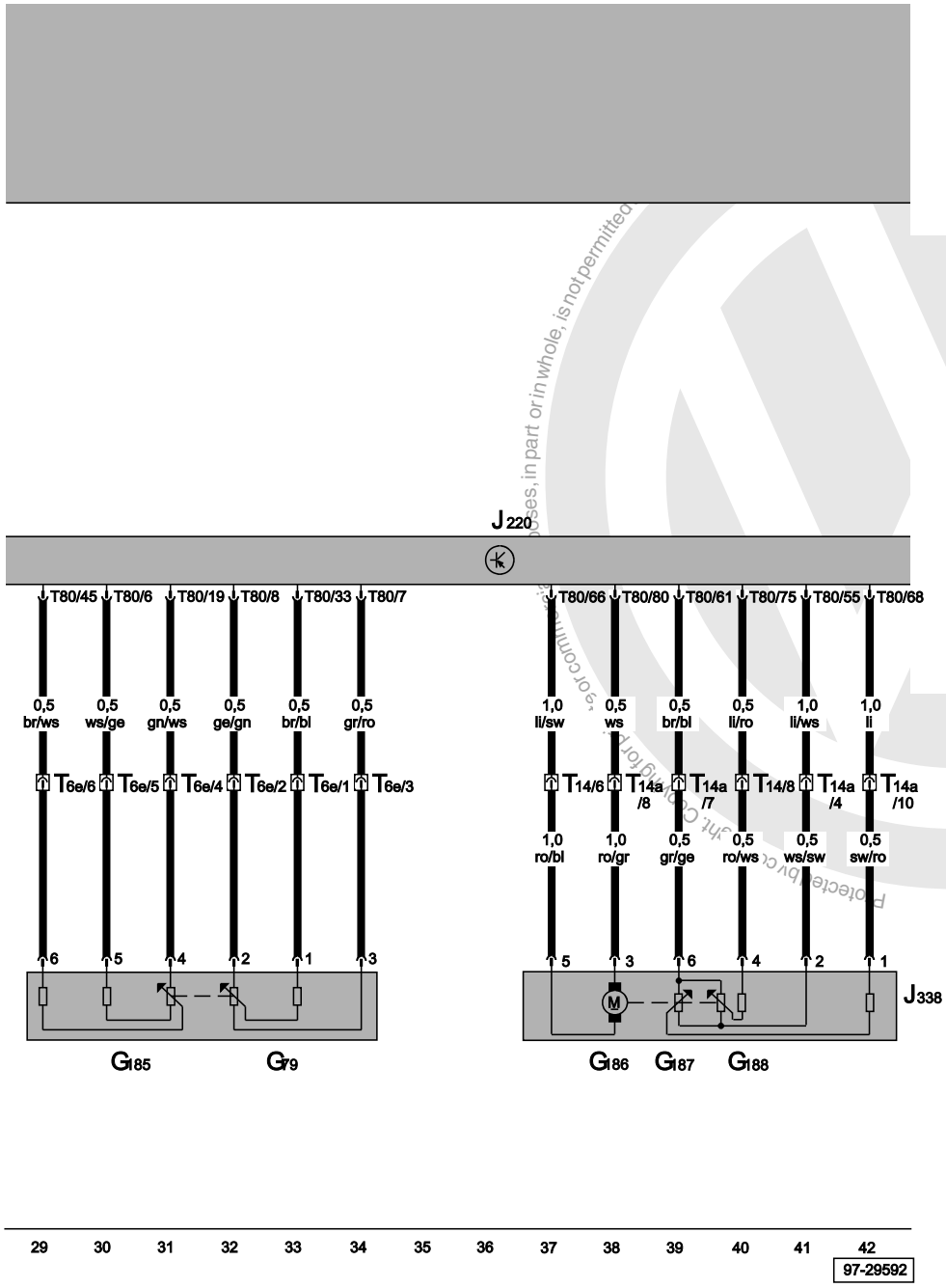

ws	=	white
sw	=	black
ro	=	red
br	=	brown
gn	=	green
bl	=	blue
gr	=	grey
li	=	purple
ge	=	yellow
or	=	orange
rs	=	pink

swagen AG does not guarantee or accept any liability with respect to the correctness of information in this document. Copyright by Volkswagen AG. Protected by copyright. Copying for private or commercial purposes, in part or in whole, is not permitted
satelettronica

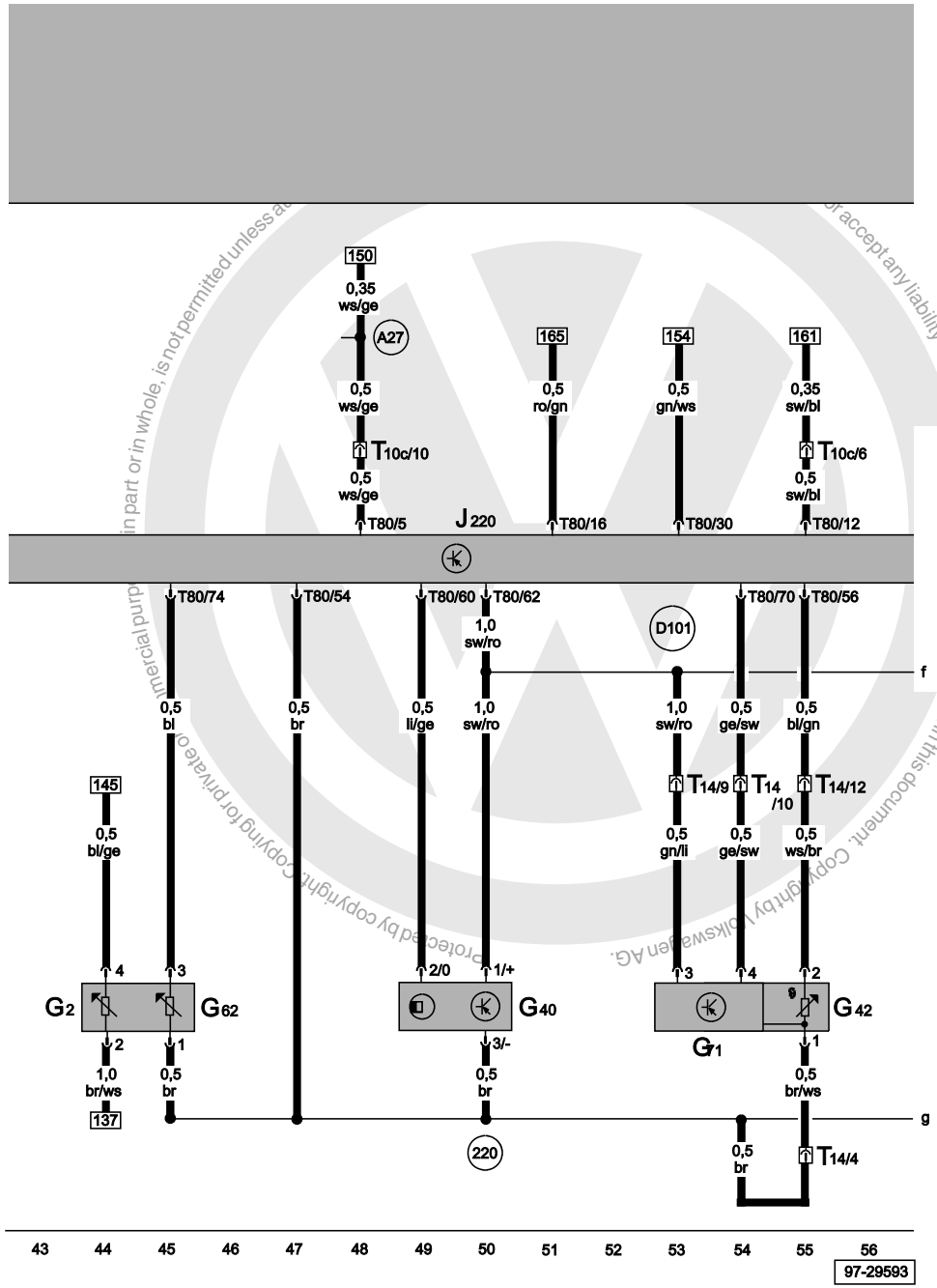

Motronic control unit, coolant temperature sender, intake air temperature sender, intake manifold pressure sender, Hall sender

G2	Coolant temperature sender
G40	Hall sender
G42	Intake air temperature sender
G62	Coolant temperature sender
G71	Intake manifold pressure sender
J220	Motronic control unit
T10c	10-pin connector, brown, coupling station under relay carrier, left
T14	14-pin connector, in engine compartment
T80	80-pin connector
220	Earth connection (sender earth), in engine wiring harness
A27	Connection (speed signal), in dash panel wiring harness
D101	Connection -1-, in engine compartment wiring harness

ws	=	white
sw	=	black
ro	=	red
br	=	brown
gn	=	green
bl	=	blue
gr	=	grey
li	=	purple
ge	=	yellow
or	=	orange
rs	=	pink

satelettronica

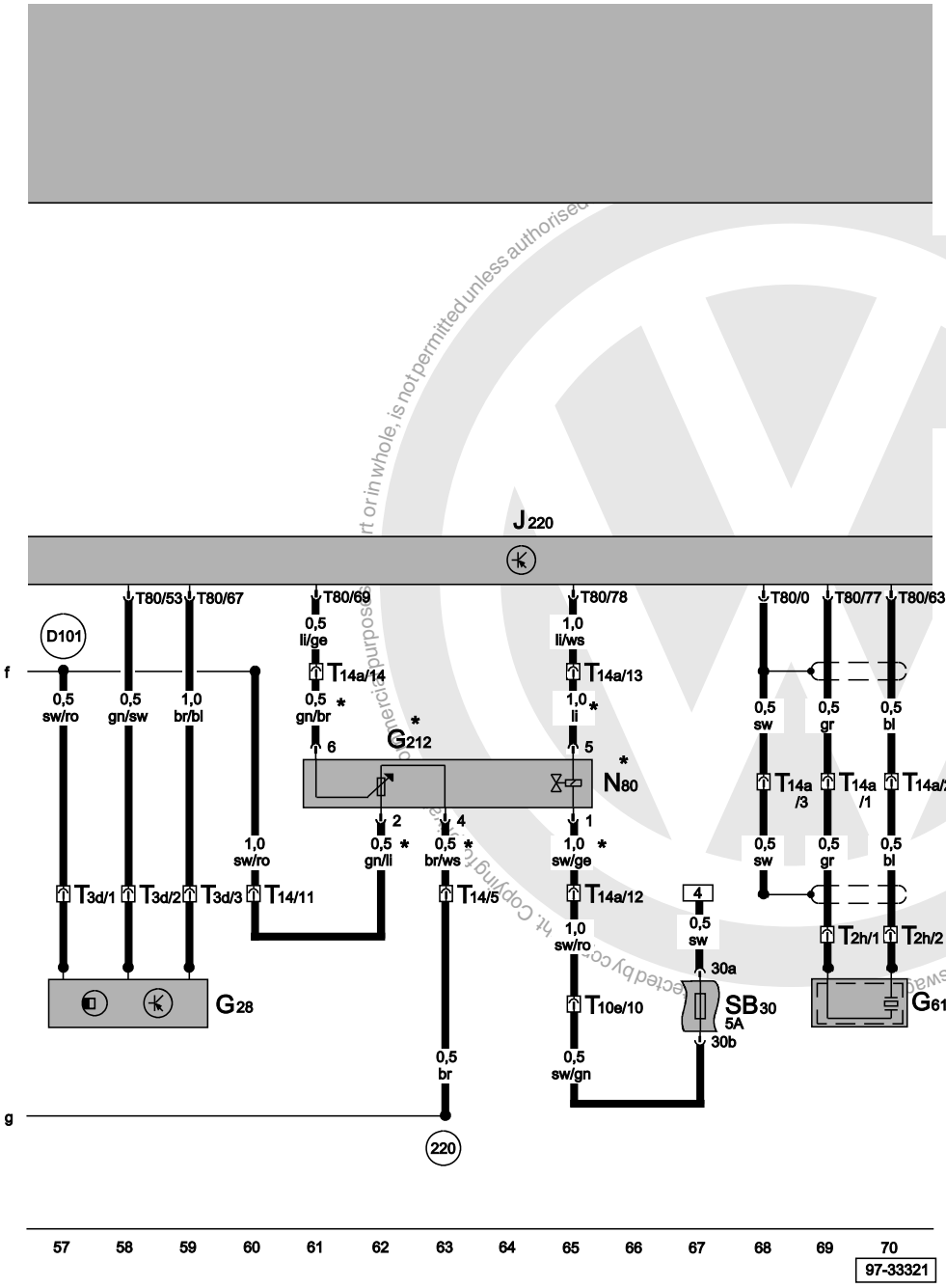

Motronic control unit, engine speed sender, knock sensor I, exhaust gas recirculation frequency valve

G28	Engine speed sender
G61	Knock sensor I
G212	Exhaust gas recirculation potentiometer
J220	Motronic control unit
N80	Exhaust gas recirculation frequency valve
SB30	Fuse -30- on fuse box
T2h	2-pin connector, near knock sensor I
T3d	3-pin connector, near engine speed sender
T10e	10-pin connector, green, coupling station under relay carrier, left
T14	14-pin connector, in engine compartment
T14a	14-pin connector, in engine compartment
T80	80-pin connector
(220)	Earth connection (sender earth), in engine wiring harness
(D101)	Connection -1-, in engine compartment wiring harness
*	Discontinued phased-in modification

ws	=	white
sw	=	black
ro	=	red
br	=	brown
gn	=	green
bl	=	blue
gr	=	grey
li	=	purple
ge	=	yellow
or	=	orange
rs	=	pink

satelettronica

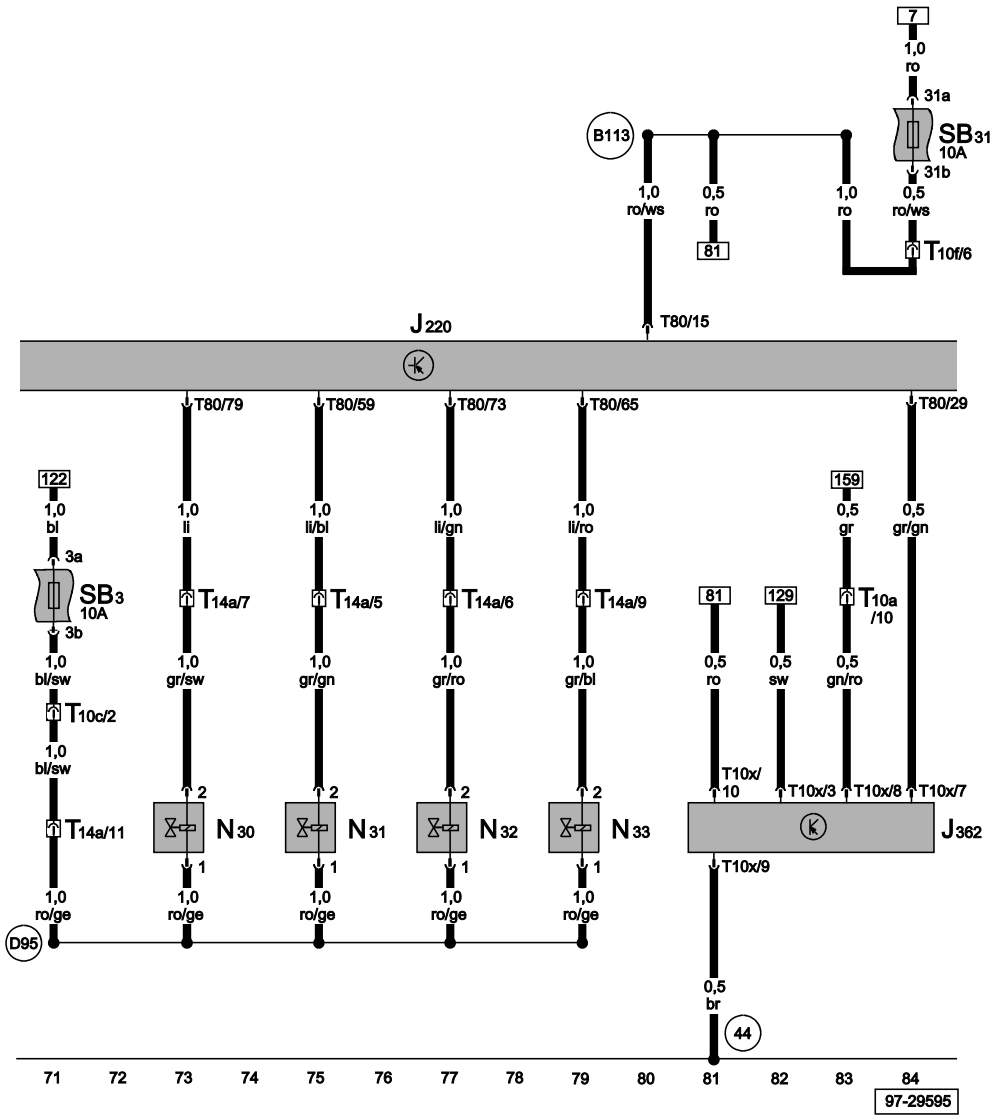

Motronic control unit, injectors, immobilizer control unit

J362	Immobilizer control unit
J220	Motronic control unit
N30	Injector, cylinder 1
N31	Injector, cylinder 2
N32	Injector, cylinder 3
N33	Injector, cylinder 4
SB3	Fuse -3- on fuse box
SB31	Fuse -31- on fuse box
T10a	10-pin connector, black, coupling station under relay carrier, left
T10c	10-pin connector, brown, coupling station under relay carrier, left
T10f	10-pin connector, purple, coupling station under relay carrier, left
T10x	10-pin connector, on immobilizer control unit
T14a	14-pin connector, in engine compartment
T80	80-pin connector
44	Earth point, lower part of left A-pillar
B113	Positive (+) connection (30a), in left interior wiring harness
D95	Connection (injectors), in engine compartment wiring harness

ws	=	white
sw	=	black
ro	=	red
br	=	brown
gn	=	green
bl	=	blue
gr	=	grey
li	=	purple
ge	=	yellow
or	=	orange
rs	=	pink

Protected by copyright. Copying for private or commercial purposes, in part or in whole, is not permitted unless authorised by Volkswagen AG. Volkswagen AG does not guarantee or accept any liability with respect to the correctness of information in this document. Copyright by Volkswagen AG.
satelettronica

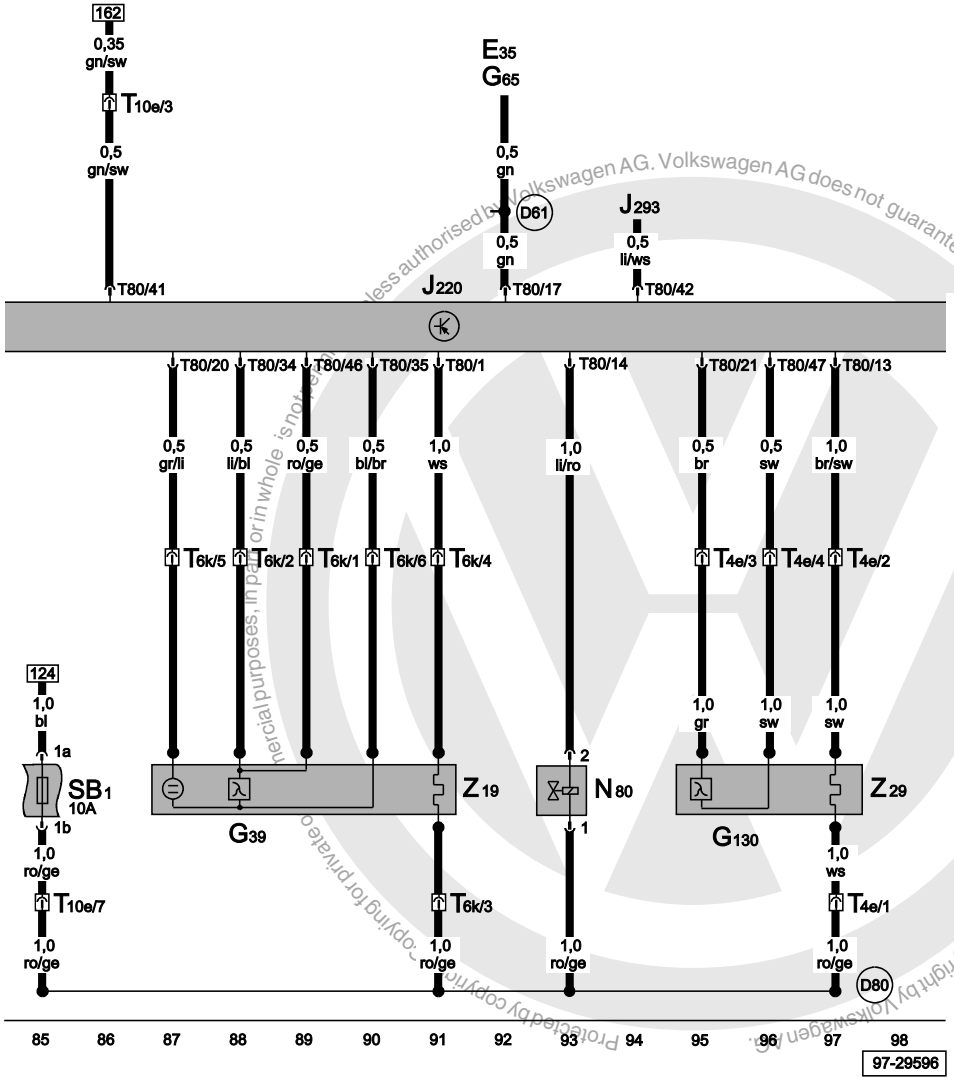

Motronic control unit, lambda probe, lambda probe after catalyst, activated charcoal filter system solenoid valve 1

E35	Air conditioner switch
G65	High pressure sender
G39	Lambda probe
G130	Lambda probe after catalyst
J293	Radiator fan control unit
J220	Motronic control unit
N80	Activated charcoal filter system solenoid valve 1 (pulsed)
SB1	Fuse -1- on fuse box
T4e	4-pin connector, near lambda probe
T6k	6-pin connector, near lambda probe
T10e	10-pin connector, green, coupling station under relay carrier, left
T80	80-pin connector
Z19	Lambda probe heater
Z29	Lambda probe 1 heater, after catalyst
D61	Connection (air conditioner), in engine compartment wiring harness
D80	Positive (+) connection (87a - for activated charcoal filter system solenoid valve), in engine compartment wiring harness

ws	=	white
sw	=	black
ro	=	red
br	=	brown
gn	=	green
bl	=	blue
gr	=	grey
li	=	purple
ge	=	yellow
or	=	orange
rs	=	pink

satelettronica

Protected by copyright. Copying for private or commercial purposes, in part or in whole, is not permitted unless authorised by Volkswagen AG. Volkswagen AG does not guarantee or accept any liability with respect to the correctness of information in this document. Copyright by Volkswagen AG.

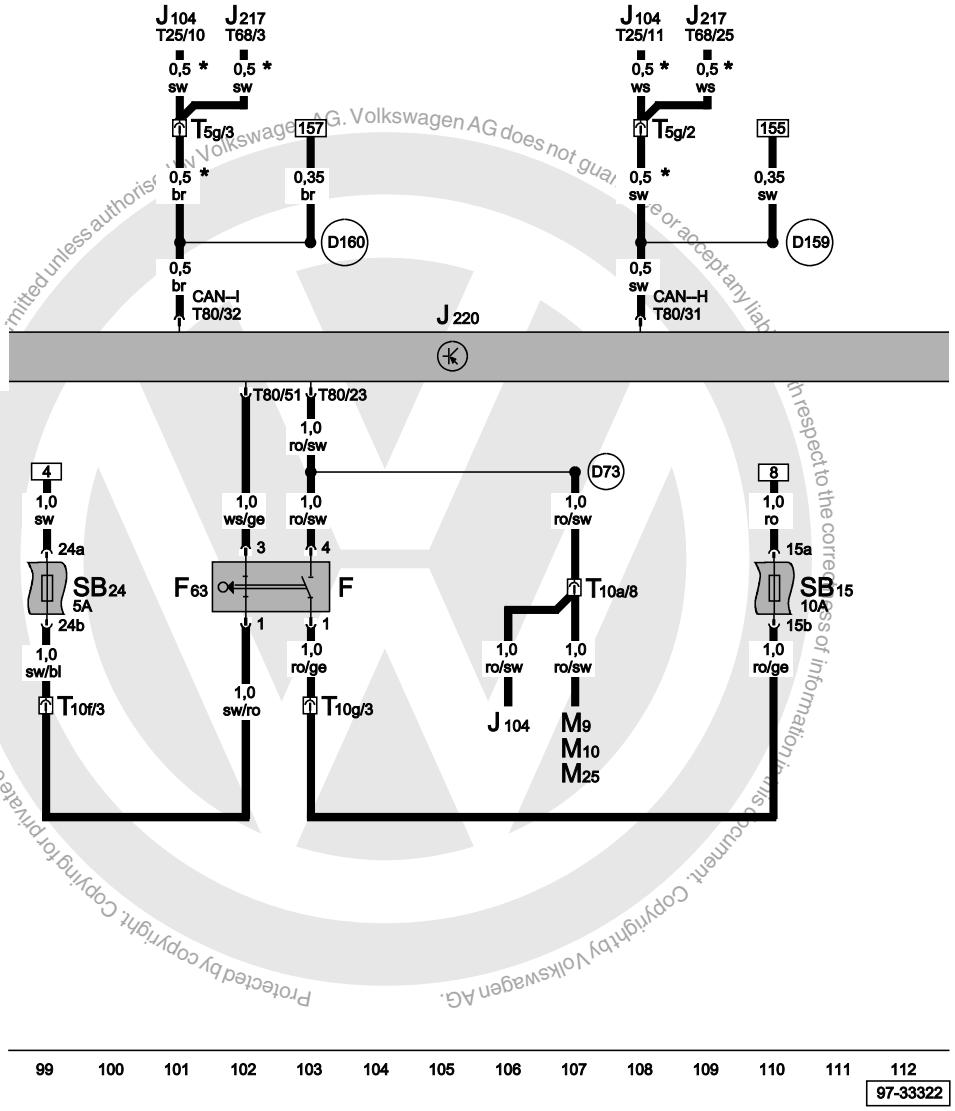

Motronic control unit, brake light switch, brake pedal switch

F	Brake light switch
F63	Brake pedal switch
J104	ABS with EDL control unit
J217	Automatic gearbox control unit
J220	Motronic control unit
M9	Brake light bulb, left
M10	Brake light bulb, right
M25	High level brake light bulb
SB15	Fuse -15- on fuse box
SB24	Fuse -24- on fuse box
T5g	5-pin connector, pink, coupling station under relay carrier, left
T10a	10-pin connector, black, coupling station under relay carrier, left
T10f	10-pin connector, purple, coupling station under relay carrier, left
T10g	10-pin connector, red, coupling station under relay carrier, left
T25	25-pin connector
T68	68-pin connector
T80	80-pin connector
D73	Positive (+) connection (54), in engine compartment wiring harness
D159	Positive (+) connection (high bus), in interior wiring harness
D160	Positive (+) connection (low bus), in engine compartment wiring harness
*	Depends on equipment

ws	=	white
sw	=	black
ro	=	red
br	=	brown
gn	=	green
bl	=	blue
gr	=	grey
li	=	purple
ge	=	yellow
or	=	orange
rs	=	pink

Protected by copyright. Copying for private or commercial purposes, in part or in whole, is not permitted unless authorised by Volkswagen AG. Volkswagen AG does not guarantee or accept any liability with respect to the correctness of information in this document. Copyright by Volkswagen AG.

satelettronica

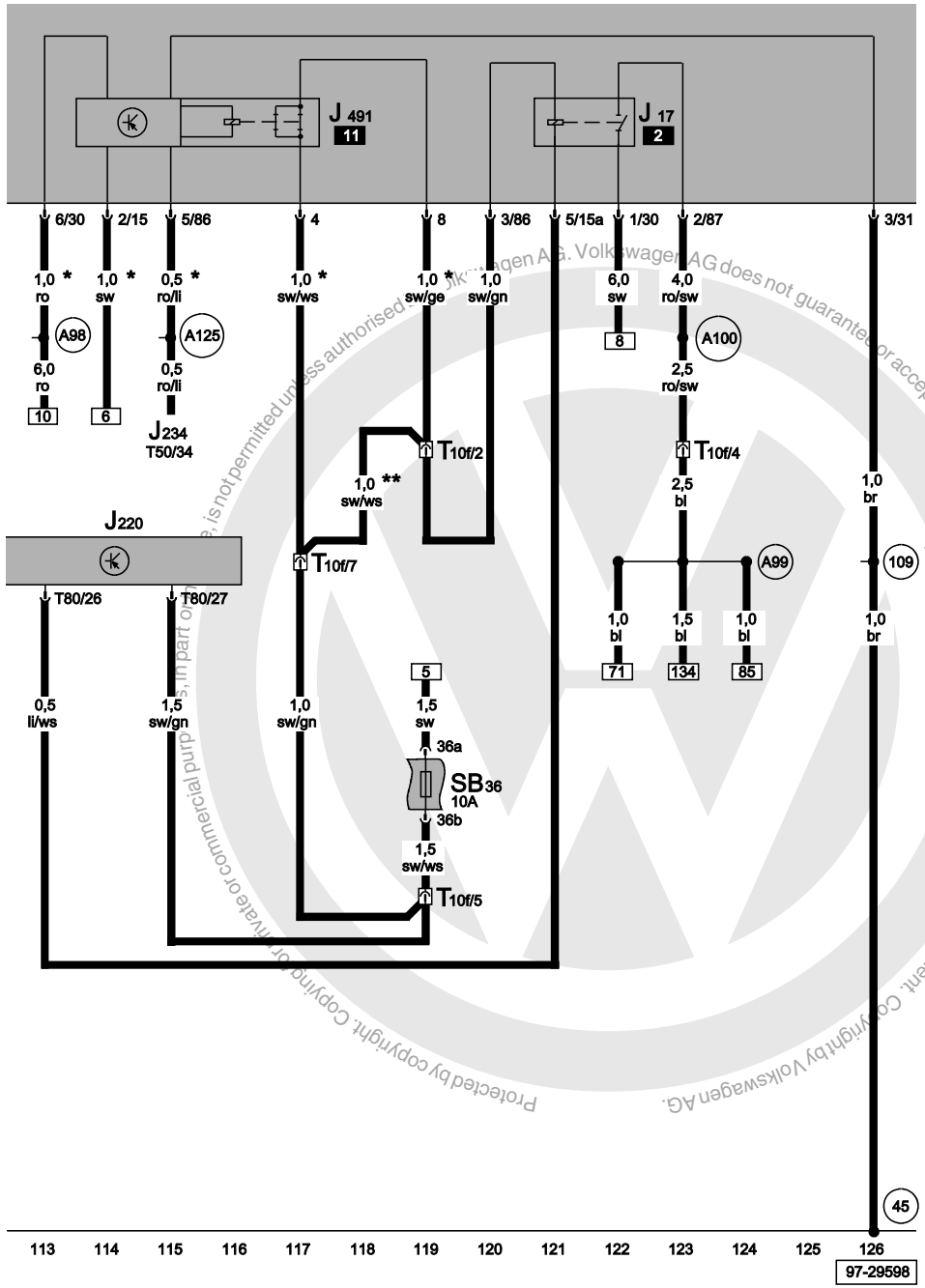

Motronic control unit, fuel pump relay, fuel shut-off control unit (crash)

J17	Fuel pump relay
J234	Airbag control unit
J491	Fuel shut-off control unit (crash)
J220	Motronic control unit
SB36	Fuse -36- on fuse box
T10f	10-pin connector, purple, coupling station under relay carrier, left
T50	50-pin connector
T80	80-pin connector
45	Earth point, behind dash panel - centre
109	Earth connection, in airbag wiring harness
A98	Positive (+) connection -4- (30), in dash panel wiring harness
A99	Connection -1- (87), in dash panel wiring harness
A100	Connection -2- (87), in dash panel wiring harness
A125	Connection (crash signal), in dash panel wiring harness
*	Only models with airbags
**	Only models without airbags
***	Does not apply to models with driver airbag, without window lifter

ws	=	white
sw	=	black
ro	=	red
br	=	brown
gn	=	green
bl	=	blue
gr	=	grey
li	=	purple
ge	=	yellow
or	=	orange
rs	=	pink

Protected by copyright. Copying for private or commercial purposes, in part or in whole, is not permitted unless authorised by Volkswagen AG. Volkswagen AG does not guarantee or accept any liability with respect to the correctness of information in this document. Copyright by Volkswagen AG.

satelettronica

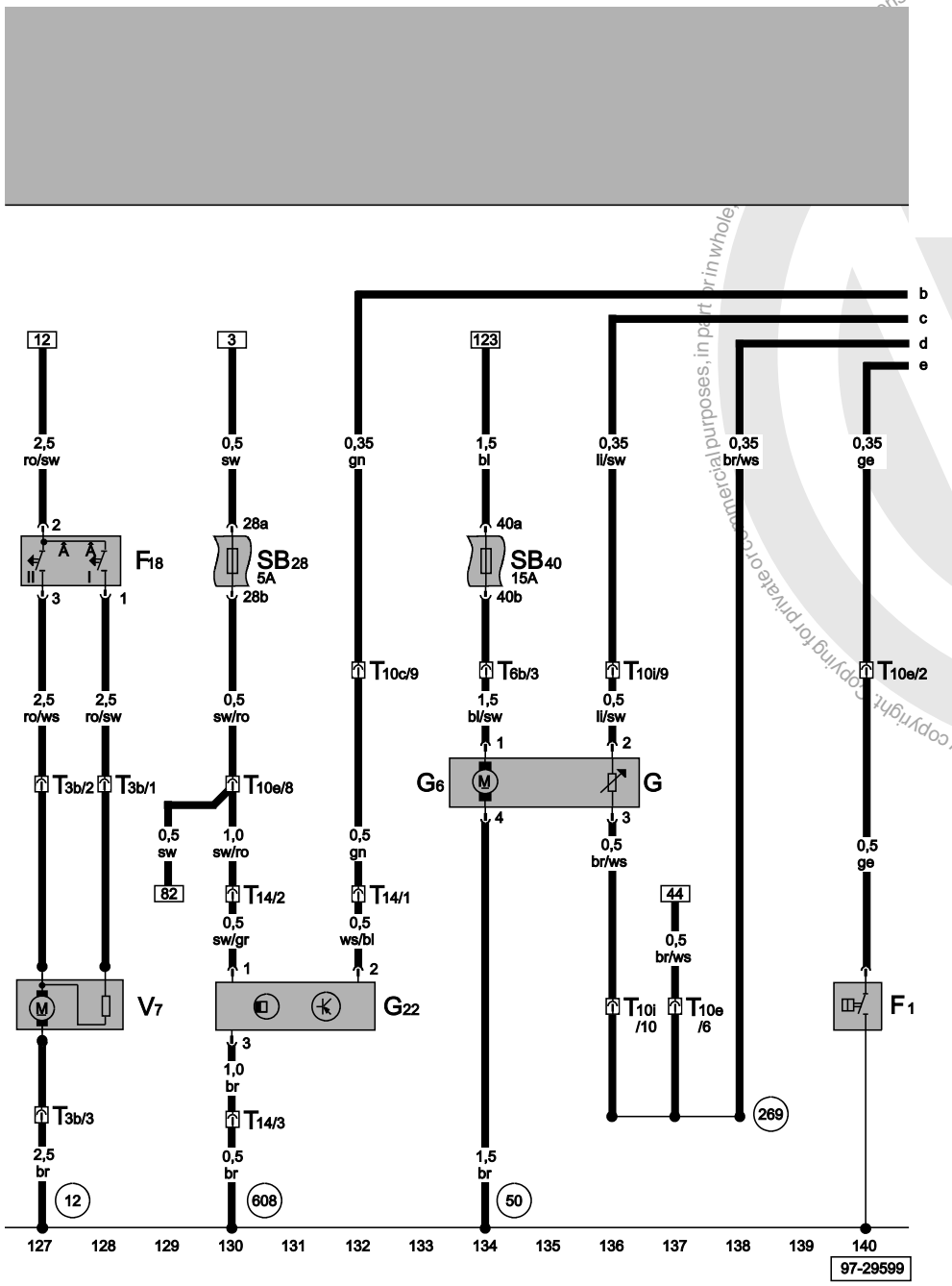

Oil pressure switch, fuel pump, speedometer sender, radiator fan, radiator fan thermo-switch, fuel pump, fuel gauge sender

F1	Oil pressure switch
F18	Radiator fan thermo-switch
G	Fuel gauge sender
G6	Fuel pump (pre-supply pump)
G22	Speedometer sender (Hall sender, on gearbox)
SB28	Fuse -28- on fuse box
SB40	Fuse -40- on fuse box
T3b	3-pin connector, on radiator fan
T6b	6-pin connector, grey, coupling station under relay carrier, left
T10c	10-pin connector, brown, coupling station under relay carrier, left
T10e	10-pin connector, green, coupling station under relay carrier, left
T10i	10-pin connector, orange, coupling station under relay carrier, left
T14	14-pin connector, in engine compartment
V7	Radiator fan
12	Earth point, left in engine compartment
50	Earth point, on left luggage compartment
269	Earth connection (sender earth) -1-, in dash panel wiring harness
608	Earth point, in centre of plenum chamber

ws	=	white
sw	=	black
ro	=	red
br	=	brown
gn	=	green
bl	=	blue
gr	=	grey
li	=	purple
ge	=	yellow
or	=	orange
rs	=	pink

Protected by copyright. Copying for private or commercial purposes, in part or in whole, is not permitted unless authorised by Volkswagen AG. Volkswagen AG does not guarantee or accept any liability with respect to the correctness of information in this document. Copyright by Volkswagen AG.
satelettronica

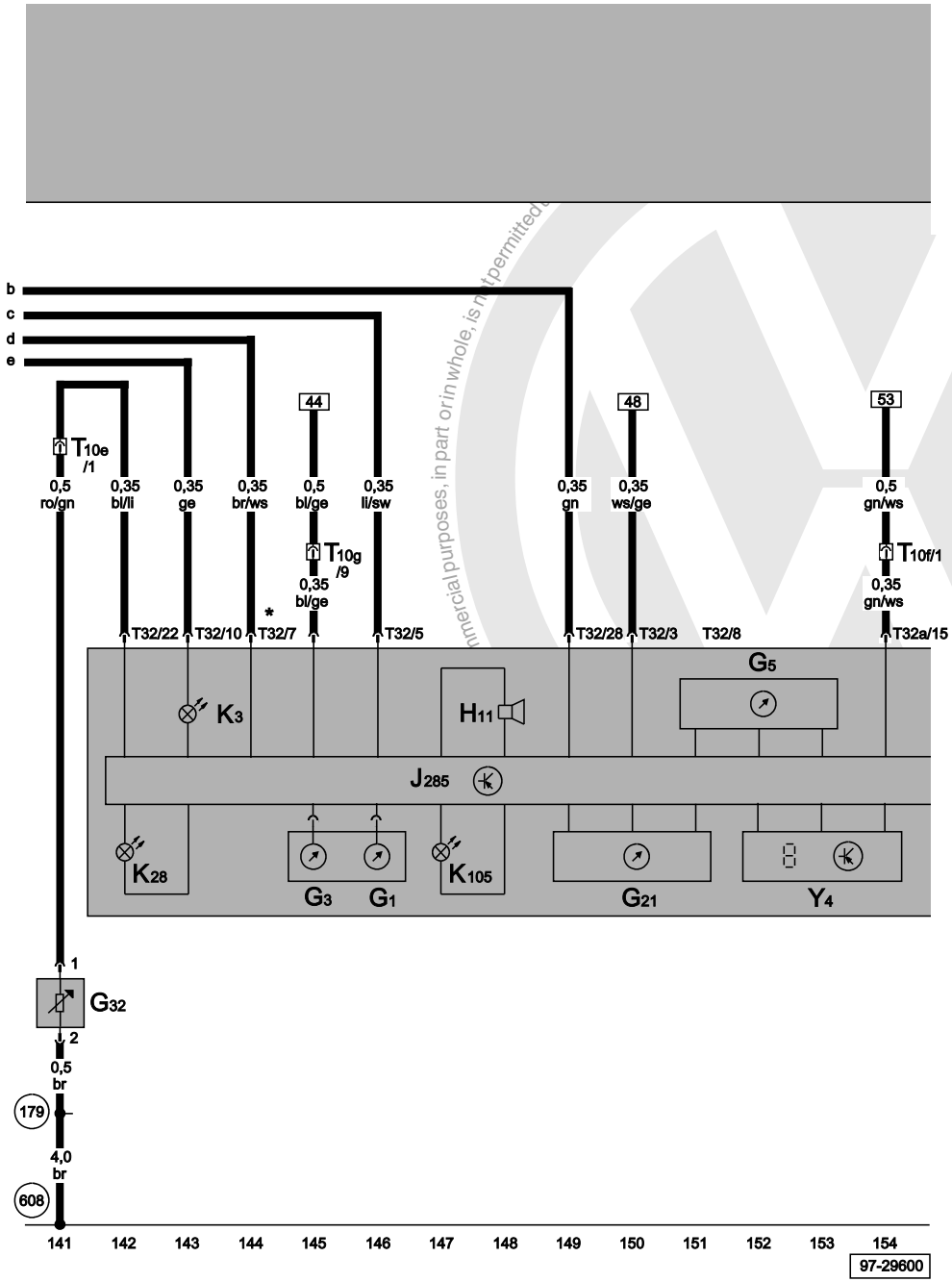

Control unit with display in dash panel insert, coolant shortage indicator sender, oil pressure warning lamp

G1	Fuel gauge
G3	Coolant temperature gauge
G5	Rev. counter
G21	Speedometer
G32	Coolant shortage indicator sender
H11	Oil pressure warning buzzer
J285	Control unit with display in dash panel insert
K3	Oil pressure warning lamp
K28	Coolant temperature/coolant shortage warning lamp
K105	Reserve fuel warning lamp
T10e	10-pin connector, green, coupling station under relay carrier, left
T10f	10-pin connector, purple, coupling station under relay carrier, left
T10g	10-pin connector, red, coupling station under relay carrier, left
T32	32-pin connector, blue, on dash panel insert
T32a	32-pin connector, green, on dash panel insert
Y4	Odometer display
179	Earth connection, in left headlight wiring harness
608	Earth point, in centre of plenum chamber
*	Output for signal earth

ws	=	white
sw	=	black
ro	=	red
br	=	brown
gn	=	green
bl	=	blue
gr	=	grey
li	=	purple
ge	=	yellow
or	=	orange
rs	=	pink

satelettronica

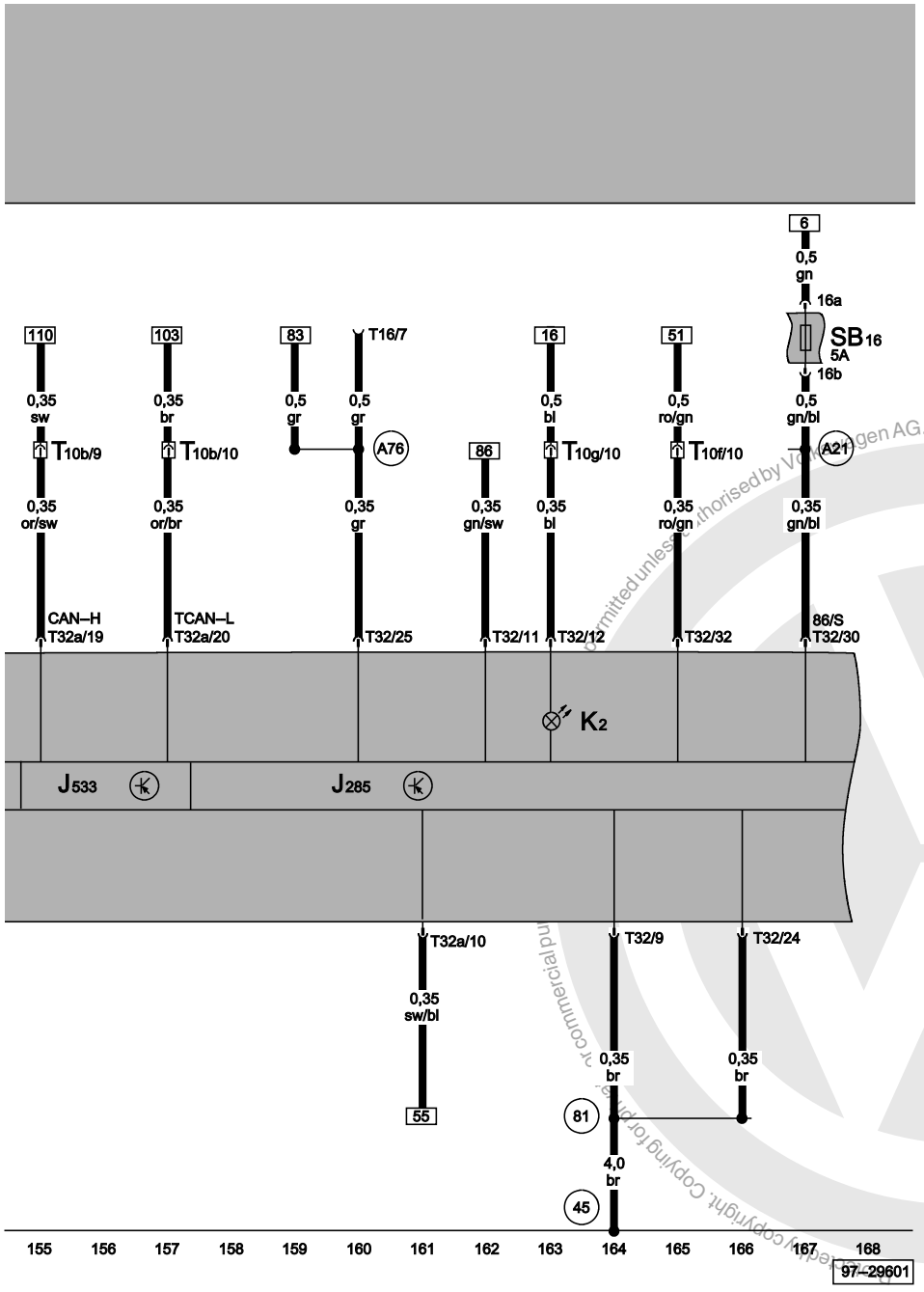

Control unit with display in dash panel insert, diagnostic connector, alternator warning lamp, data bus diagnostic interface

J285	Control unit with display in dash panel insert
J533	Data bus diagnostic interface
K2	Alternator warning lamp
SB16	Fuse -16- on fuse box
T10b	10-pin connector, white, coupling station under relay carrier, left
T10f	10-pin connector, purple, coupling station under relay carrier, left
T10g	10-pin connector, red, coupling station under relay carrier, left
T16	16-pin connector, diagnostic connector
T32	32-pin connector, blue, on dash panel insert
T32a	32-pin connector, green, on dash panel insert
45	Earth point, behind dash panel - centre
81	Earth connection -1-, in dash panel wiring harness
A21	Connection (86s), in dash panel wiring harness
A76	Connection (diagnosis wire K), in dash panel wiring harness

ws	=	white
sw	=	black
ro	=	red
br	=	brown
gn	=	green
bl	=	blue
gr	=	grey
li = purple
ge = yellow
or = orange
rs = pink

satelettronica

Protected by copyright. Copyright for private or commercial purposes, in part or in whole, is not permitted unless authorised by Volkswagen AG. Volkswagen does not guarantee or accept any liability with respect to the correctness of information in this document. Copyright by Volkswagen AG.

Polo Classic

⇒ 1.4L - 62kw from VIN number AAVZZZ6KZTU003305
⇒ 1.6L - 74kw from VIN number AAVZZZ6KZTU003047
⇒ 1.8L - 82kw from VIN number AAVZZZ6KZVU004697
From 1996

Relay locations

Relay locations and wiring of multi-pin connectors, see also "Fitting Locations" section.

1 - Light on buzzer relay (292)
2 - Electric window (53)
3 - Air conditioner relay (147)
4 - Power supply relay for Motronic Control unit (30)
5 - X-relief relay (18)
6 - Emergency (hazard) light relay (191)
7 - Intermittent wash/wipe relay (19)
8 - Fuel pump relay (167)

Note:

♦ *The number in brackets after the part designation refer to the production control number on the housing*

Fuse colours

30A - green
20A - yellow
15A - blue
10A - red

satelettronica

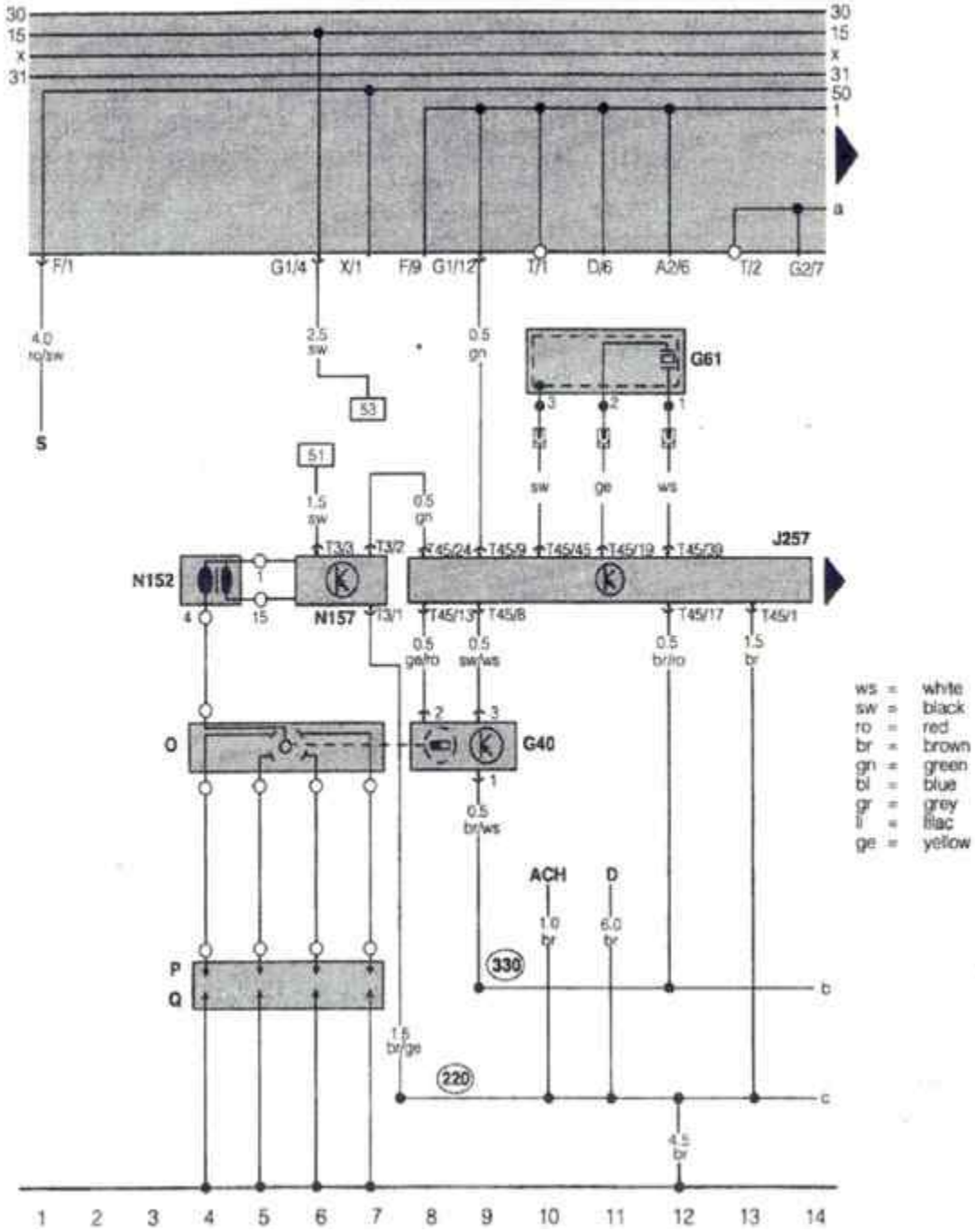

ws = white
sw = black
ro = red
br = brown
gn = green
bl = blue
gr = grey
li = lilac
ge = yellow

Bosch Motronic MP9 Control Unit, ignition system, knock sensor, engine RPM sender

N152	Ignition transformer
N157	Ignition transformer output stage
O	Ignition distributor
P	Spark plug connector
Q	Spark plugs
G40	Hall sender
J257	Mono-Motronic control unit, in plenum chamber (45-pin connector)
G61	Knock sensor
S	Starter (50)
ACH	To earth crimp, for Aircon crimp
D	Earth crimp in engine wiring harness
220	Earth connection (31) in engine wiring harness
330	ECU earth crimp for senders, in the engine wiring harness

lkswagen AG does not guarantee or accept any liability with respect to the correctness of information in this document. Copyright by Volkswagen AG.

satelettronica

ws = white
sw = black
ro = red
br = brown
gn = green
bl = blue
gr = grey
li = purple
ge = yellow
or = orange
rs = pink

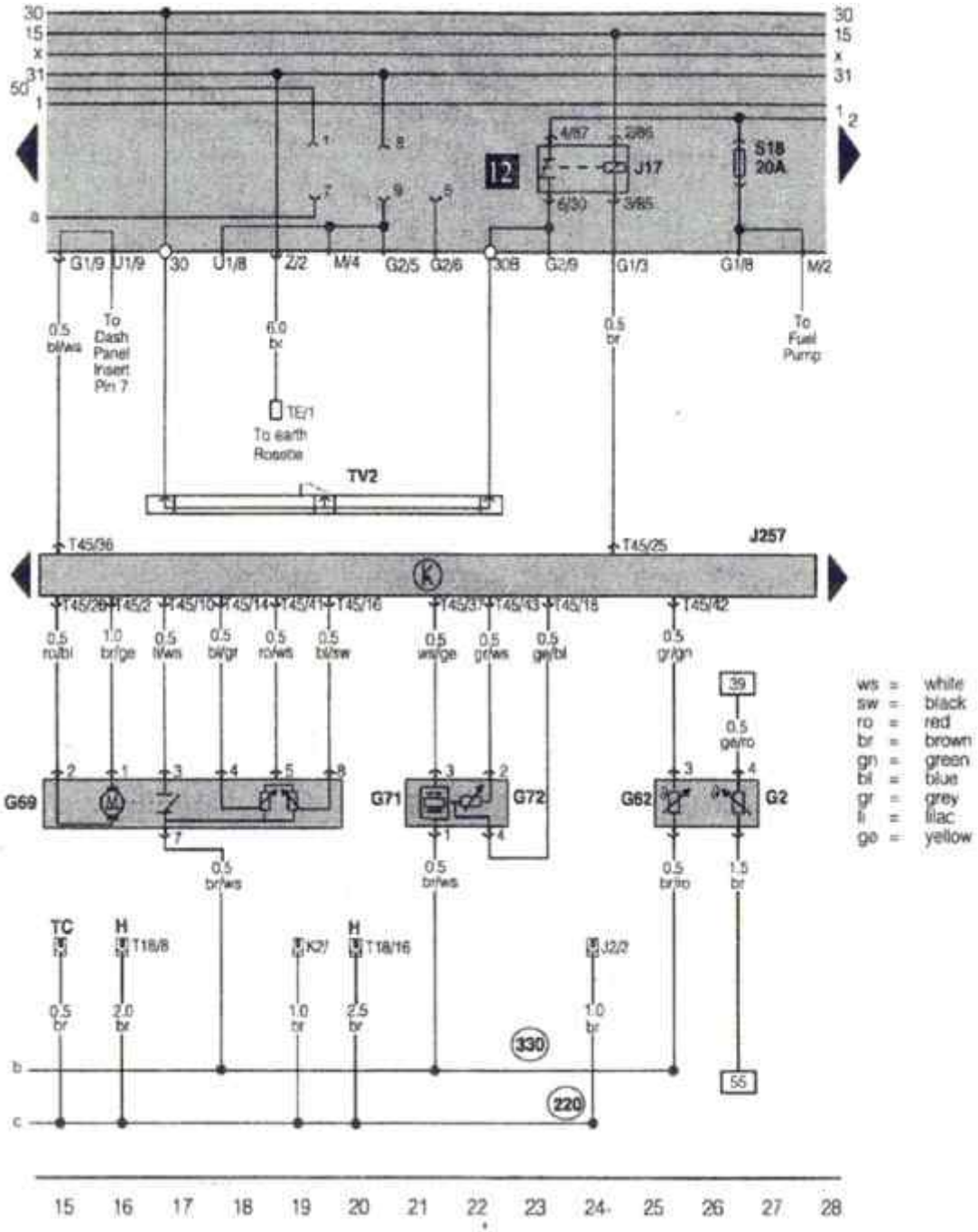

Bosch Motronic MP9 Control Unit, senders for intake manifold and coolant temperature, throttle valve potentiometer

G69	Throttle valve potentiometer
G71	Pressure sensor
G72	Intake manifold temperature sensor
G62	Coolant temperature sender
G2	Coolant temperature sender
J257	Mono-Motronic control unit, in plenum chamber (45-pin connector)
S18	Fuse - 20 amp
J17	Fuel pump relay
TV2	Junction box for terminal 30 above relay plate
TE/1	Single connector - earth rossette
H	To front harness connector, 18-pin
T18/	18-pin connector
K2/	To 2-pin connector (Right Indicator)
J2/	To 2-pin connector (Left Indicator)
TC	To 6-pin connector (cooling fan module, non Aircon models only)
220	Earth connection (31) in engine wiring harness
330	ECU earth crimp for sensors, in the engine wiring harness

ws = white
sw = black
ro = red
br = brown
gn = green
bl = blue
gr = grey
li = purple
ge = yellow
or = orange
rs = pink

gen AG. Volkswagen AG does not guarantee or accept any liability with respect to the correctness of information in this document. Copyright by Volkswagen AG.
Prot
satelettronica

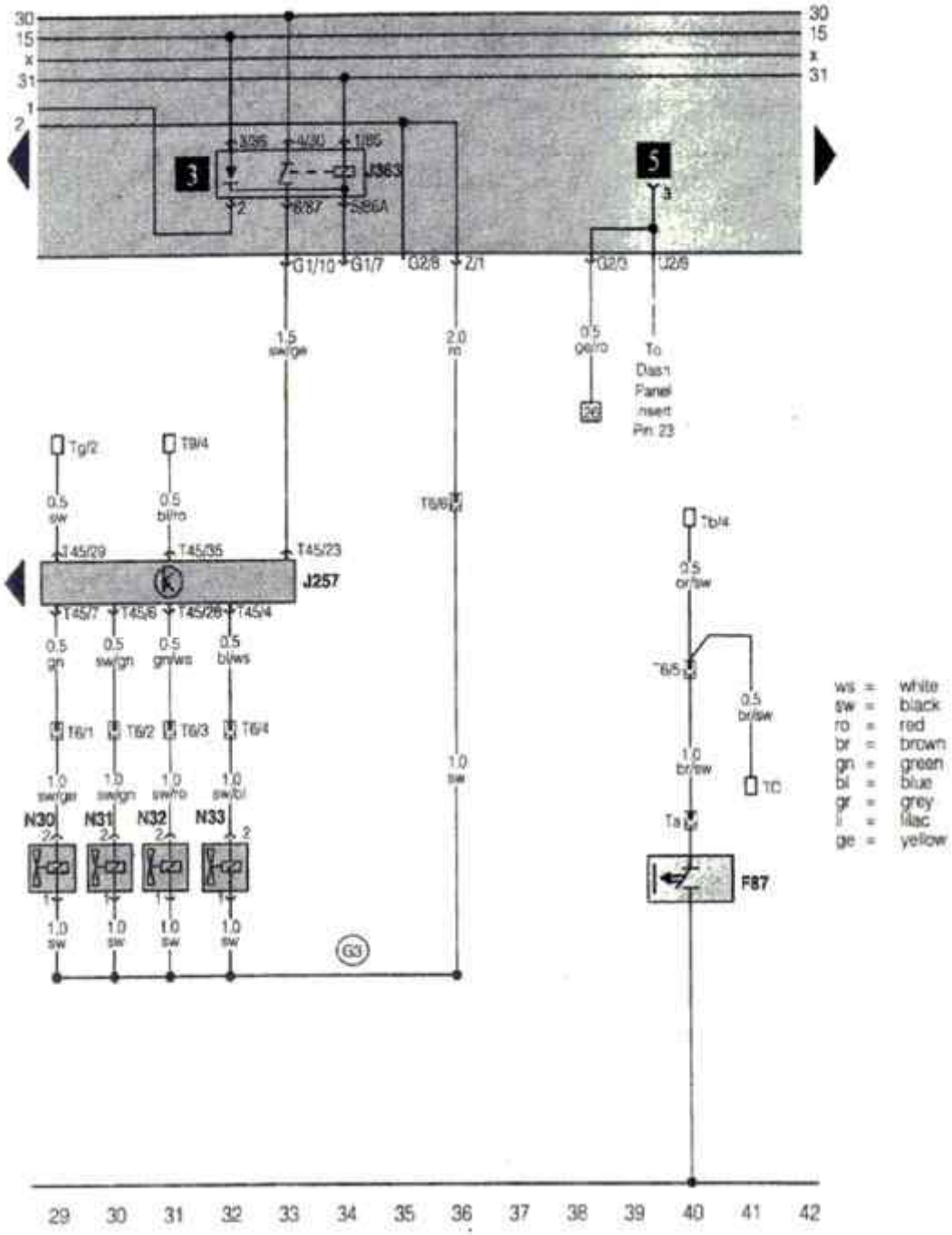

ws = white
sw = black
ro = red
br = brown
gn = green
bl = blue
gr = grey
li = lilac
ge = yellow

Bosch Motronic MP9 Control Unit, injectors, thermo switch for run-on fan

J363	Power supply relay for Motronic control unit
J257	Mono-Motronic control unit, in plenum chamber (45-pin connector)
G22	Speedo sender
F87	Thermo switch for run-on fan
N30	Injector Cyl. 1
N31	Injector Cyl. 2
N32	Injector Cyl. 3
N33	Injector Cyl. 4
T6/	Connector 6-pin, injector rail
T9/4	Aircon connector 9-pin
T8/2	Transponder connection 6-pin
Ta	Single connection in engine compartment
Tb	10-pin connector (cooling fan module, Aircon models only)
TC	6-pin connector (cooling fan module, Non Aircon models only)
G3	Positive (+) connector in cable sleeve injectors

ws = white
sw = black
ro = red
br = brown
gn = green
bl = blue
gr = grey
li = purple
ge = yellow
or = orange
rs = pink

Protected by copyright by Volkswagen AG. Volkswagen AG does not guarantee or accept any liability with respect to the correctness of information in this document. Copyright by Volkswagen AG.

satelettronica

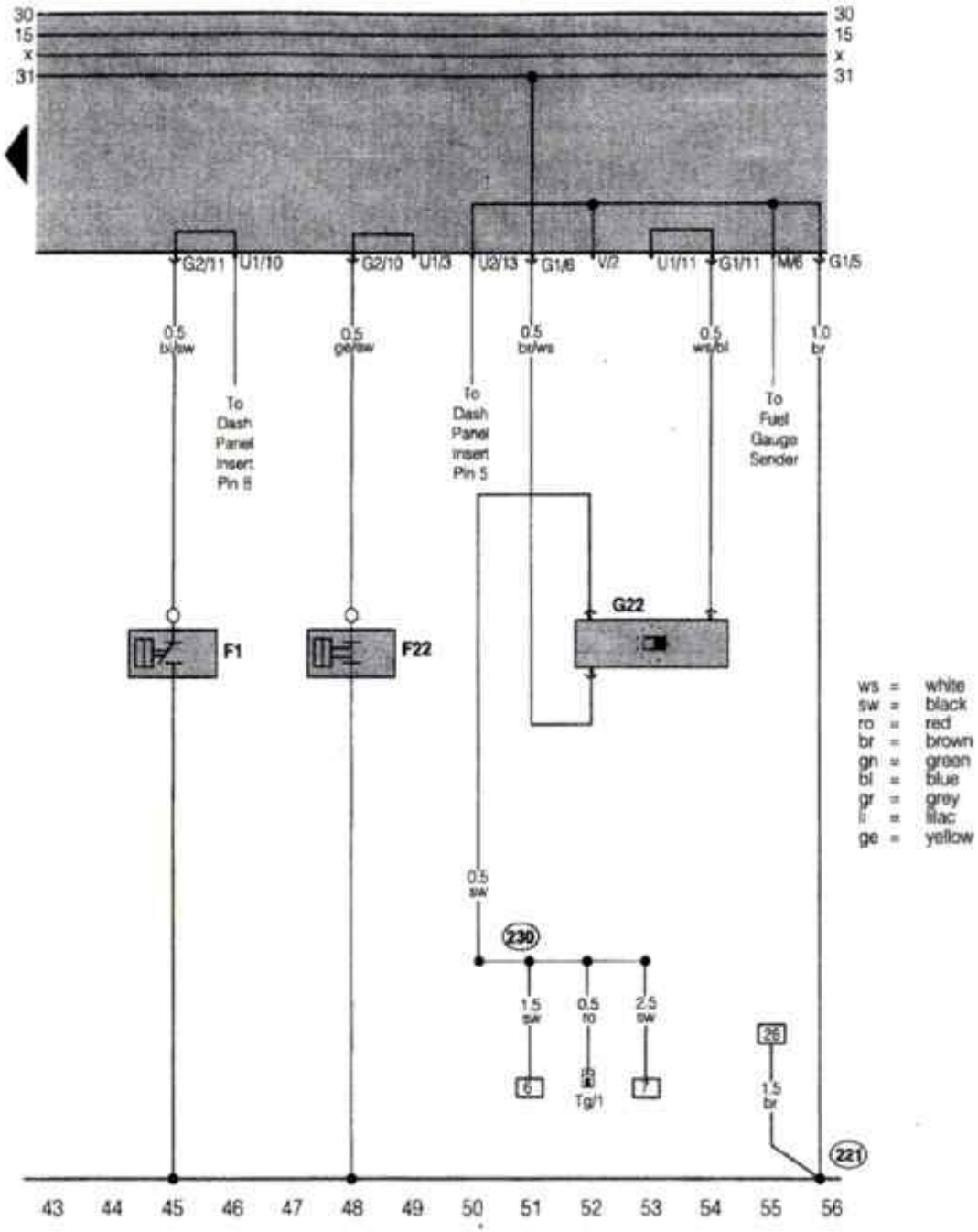

ws = white
sw = black
ro = red
br = brown
gn = green
bl = blue
gr = grey
li = lilac
ge = yellow

Oil pressure switch, sender for speedometer

G22	Speedo sender
F1	Oil pressure switch (0.3 bar)
F22	Oil pressure switch (1.8 bar)
Tg/	To transponder, 6-pin connector
221	Earth connecion (engine earth) in engine wiring harness
230	Positive (15) crimp in engine hiring harness

ws = white
sw = black
ro = red
br = brown
gn = green
bl = blue
gr = grey
li = purple
ge = yellow
or = orange
rs = pink

orised by Volkswagen AG. Volkswagen AG does not guarantee or accept any liability with respect to the correctness of information in this document. Copyright by Volkswagen AG.
Protected by copyright.
satelettronica